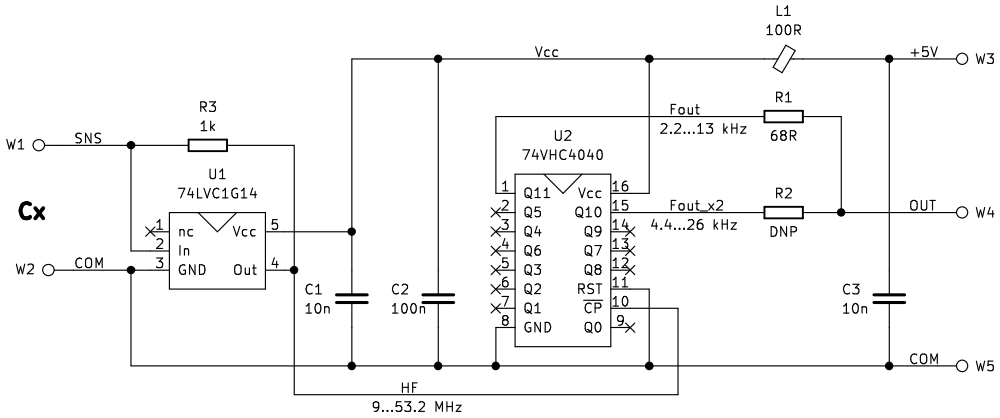

Soil Moisture Sensor rev 2.1

(c) 2020 Alex Kouznetsov, https://github.com/akouz/Soil_moisture

MIT license

=AK=

Sheet: /
File: Soil_sensor.sch

Title: Soil Moisture Sensor

Size: A4	Date: 2020-04-02	**Rev: 2.1**
KiCad E.D.A. kicad (5.1.4)-1		Id: 1/1