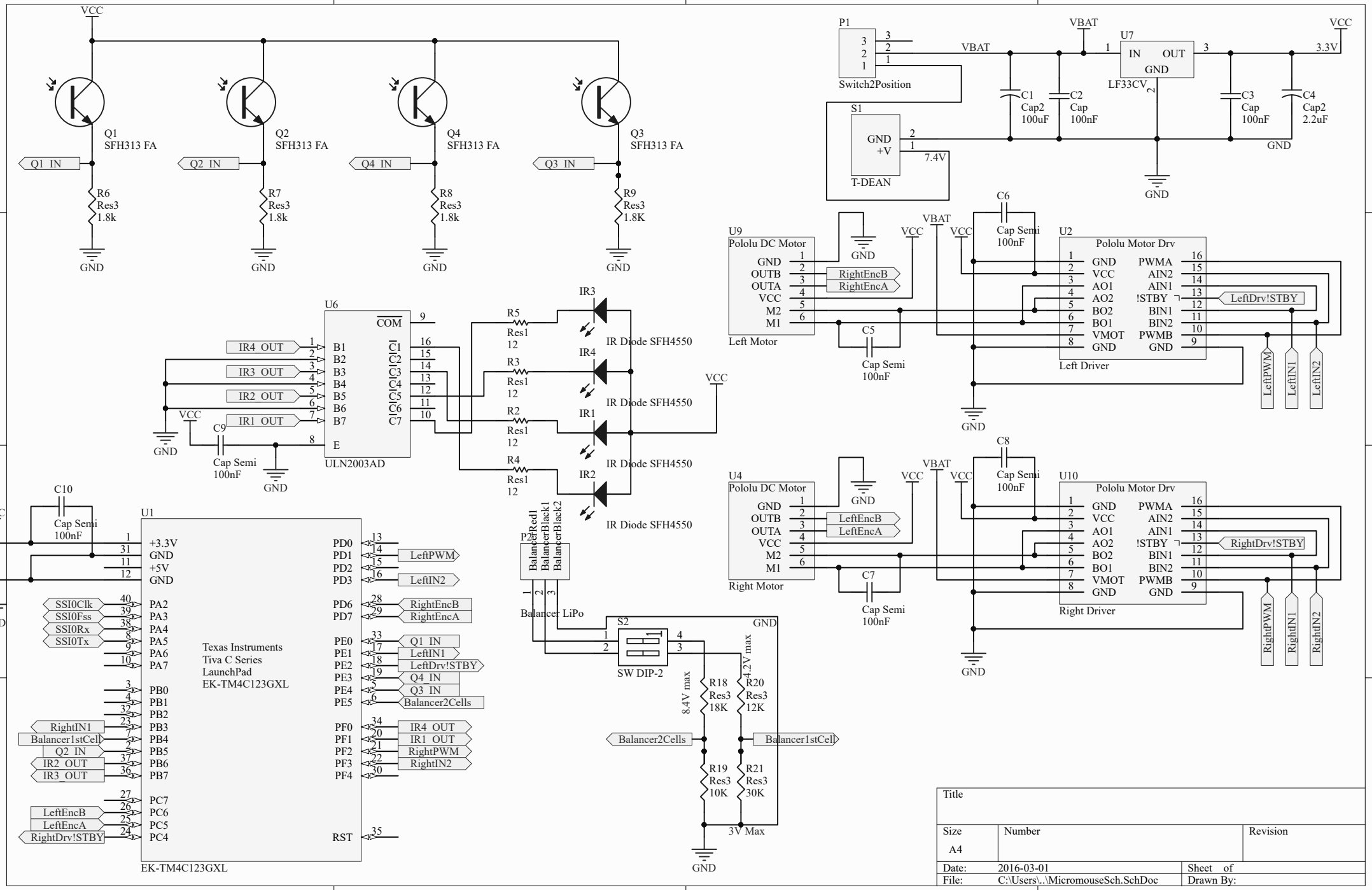
VCC
Q1
SFH313 FA
Q2
SFH313 FA
Q4
SFH313 FA
Q3
SFH313 FA
Q1 IN
Q2 IN
Q4 IN
Q3 IN
R6
Res3
1.8k
R7
Res3
1.8k
R8
Res3
1.8k
R9
Res3
1.8K
GND
P1
Switch2Position
VBAT
U7
IN
OUT
GND
LF33CV
3.3V
C1
Cap2
100uF
C2
Cap
100nF
C3
Cap
100nF
C4
Cap2
2.2uF
S1
GND
+V
T-DEAN
7.4V
U9
Pololu DC Motor
GND
OUTB
OUTA
VCC
M2
M1
Left Motor
RightEncB
RightEncA
C5
Cap Semi
100nF
C6
Cap Semi
100nF
U2
Pololu Motor Drv
PWMA
AIN2
AIN1
!STBY
BIN1
BIN2
PWMB
AO1
AO2
BO2
BO1
VMOT
Left Driver
LeftDrv!STBY
LeftPWM
LeftIN1
LeftIN2
U6
COM
B1
B2
B3
B4
B5
B6
B7
E
C1
C2
C3
C4
C5
C6
C7
ULN2003AD
IR4 OUT
IR3 OUT
IR2 OUT
IR1 OUT
C9
Cap Semi
100nF
R5
Res1
12
R3
Res1
12
R2
Res1
12
R4
Res1
12
IR3
IR4
IR1
IR2
IR Diode SFH4550
U4
Pololu DC Motor
Right Motor
LeftEncB
LeftEncA
C7
Cap Semi
100nF
C8
Cap Semi
100nF
U10
Pololu Motor Drv
Right Driver
RightDrv!STBY
RightPWM
RightIN1
RightIN2
C10
Cap Semi
100nF
U1
+3.3V
GND
+5V
PA2
PA3
PA4
PA5
PA6
PA7
PB0
PB1
PB2
PB3
PB4
PB5
PB6
PB7
PC7
PC6
PC5
PC4
PD0
PD1
PD2
PD3
PD6
PD7
PE0
PE1
PE2
PE3
PE4
PE5
PF0
PF1
PF2
PF3
PF4
RST
Texas Instruments
Tiva C Series
LaunchPad
EK-TM4C123GXL
SSI0Clk
SSI0Fss
SSI0Rx
SSI0Tx
RightIN1
Balancer1stCell
Q2 IN
IR2 OUT
IR3 OUT
LeftEncB
LeftEncA
RightDrv!STBY
LeftPWM
LeftIN2
RightEncB
RightEncA
Q1 IN
LeftIN1
LeftDrv!STBY
Q4 IN
Q3 IN
Balancer2Cells
IR4 OUT
IR1 OUT
RightPWM
RightIN2
EK-TM4C123GXL
P2
BalancerRed1
BalancerBlack1
BalancerBlack2
Balancer LiPo
S2
SW DIP-2
8.4V max
4.2V max
R18
Res3
18K
R20
Res3
12K
R19
Res3
10K
R21
Res3
30K
3V Max
Title
Size
A4
Number
Revision
Date:
2016-03-01
Sheet of
File:
C:\Users\..\MicromouseSch.SchDoc
Drawn By: