CASSETTE RECEIVER

KRC-3006

SERVICE MANUAL

2702

KENWOOD

© 1994-1 PRINTED IN JAPAN
B51-6670-00(O) 1621

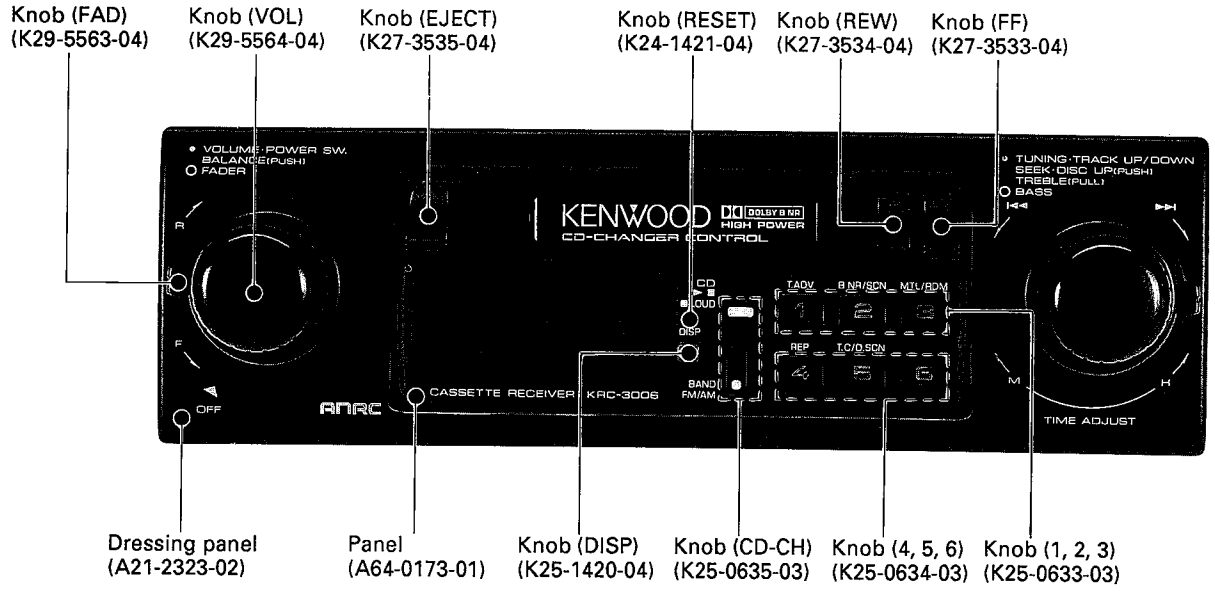

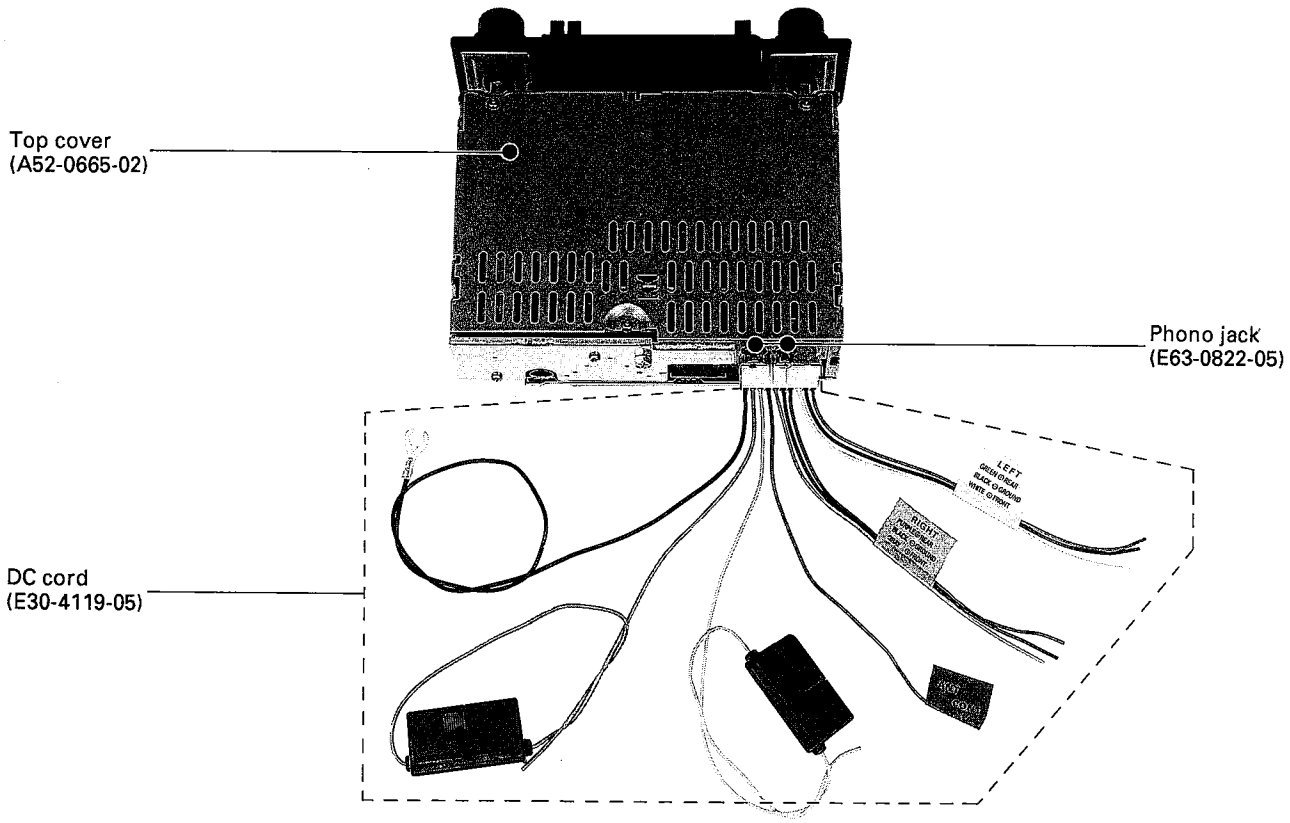

KRC-3006

CONTENTS/DISASSEMBLY FOR REPAIR (MECHANISM)

CONTENTS

DISASSEMBLY FOR REPAIR (MECHANISM) 2
BLOCK DIAGRAM 4
MECHANISM OPERATION DESCRIPTION 5
ADJUSTMENT 14
PC BOARD (COMPONENT SIDE VIEW) 17, 19
PC BOARD (FOIL SIDE VIEW) 18, 21
SCHEMATIC DIAGRAM 23
EXPLODED VIEW (MECHANISM) 27
EXPLODED VIEW (UNIT) 28
PARTS LIST 29
SPECIFICATIONS ..... BACK COVER

DISASSEMBLY FOR REPAIR (MECHANISM)

REMOVAL NO1.

1. Remove screw (155) (❶).
2. Rotate the lifter (43) to the left and lift it up to remove (❷).
3. Remove the rod (52) from the eject lever (61) (❸).

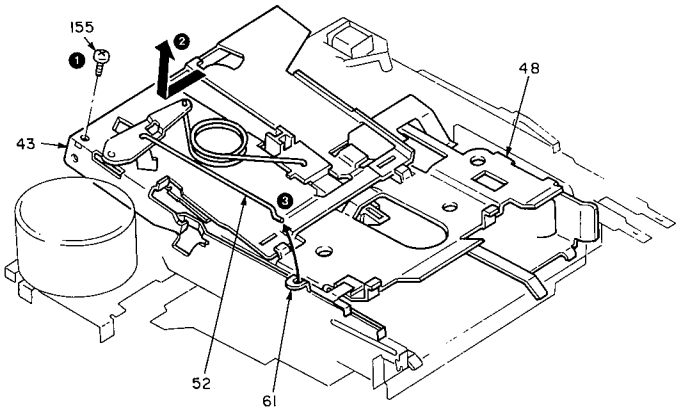

REMOVAL NO2.

4. While pressing-in on the eject lever (61), remove the holder(48) (❹).

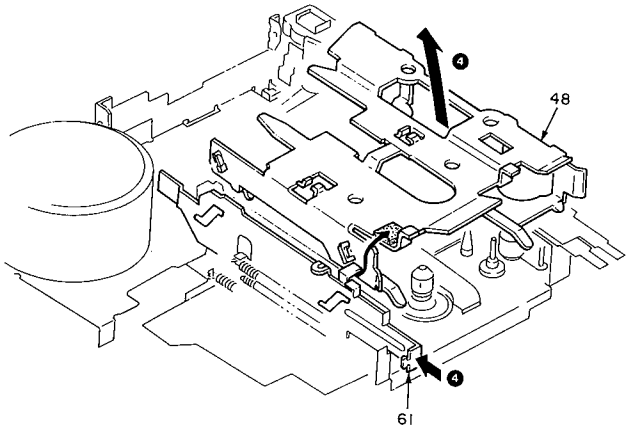

DISASSEMBLY FOR REPAIR (MECHANISM)

SET UP NO1.

1. While pressing-in on the eject lever (61) , attach the holder (48) (❶).
2. Insert the holder's (48) projecting tab into push plate's groove (❷).

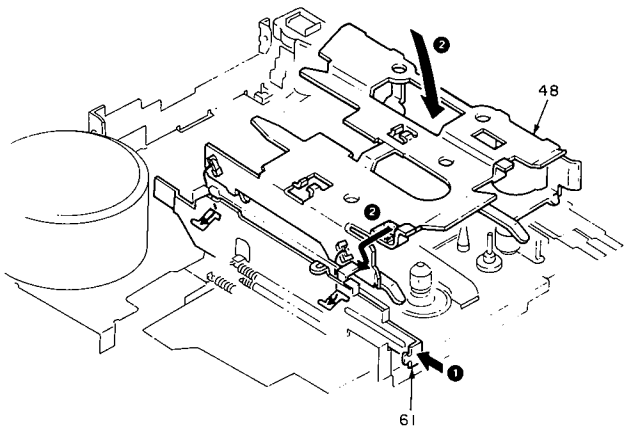

SET UP NO2.

3. Insert the rod (52) into the hole in the eject lever (61) (❸).
4. While lifting up the holder (48) , engage the lifter (43) (❹).
5. Move the lifter (43) down so that it aligns with the eject lever's (61) cut out (❺) section.

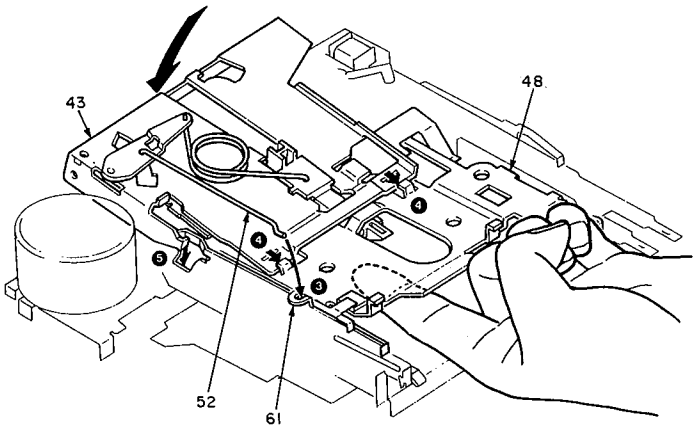

SET UP NO3.

6. Align the lifter (43) with the chassis (1) projections and move it to the right to engage (see diagram) (❻)
7. Secure the assembly by attaching the screw (❼).

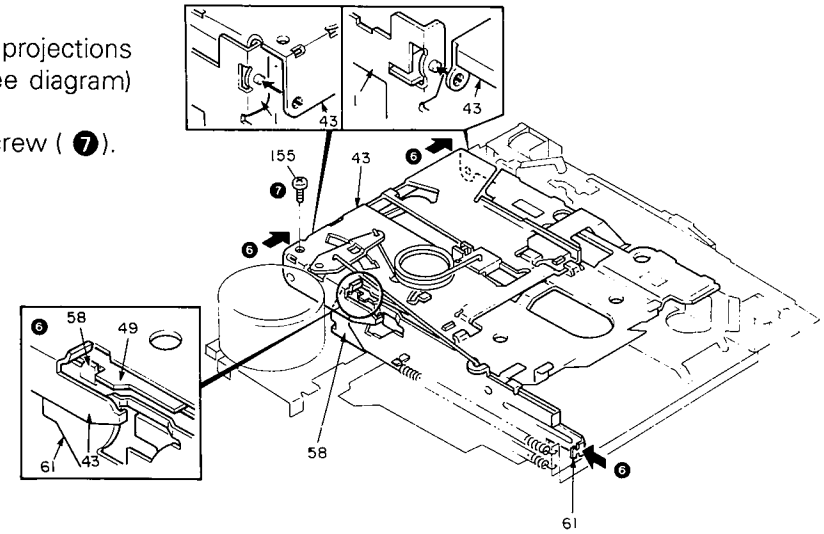

BLOCK DIAGRAM

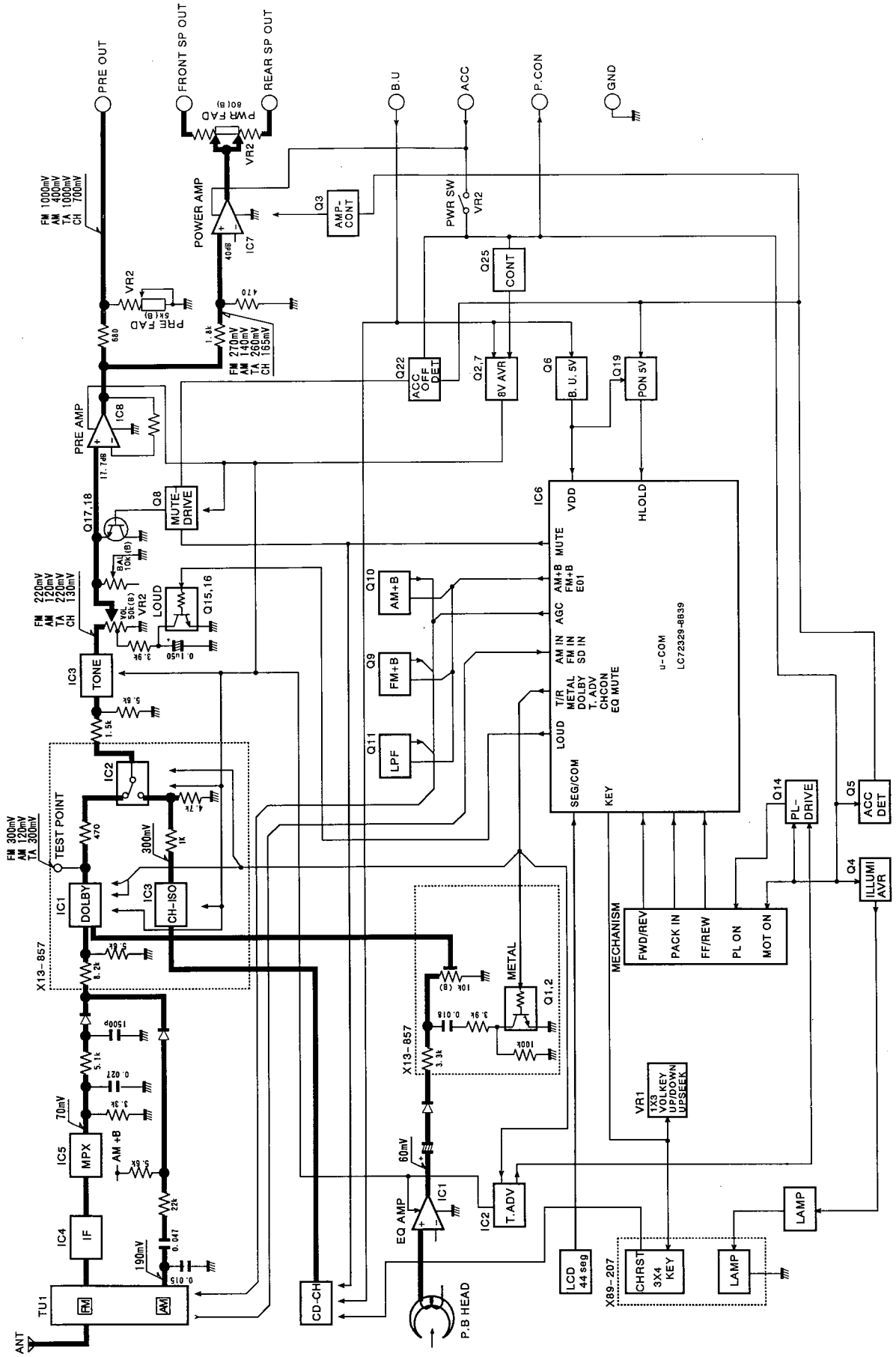

MECHANISM OPERATION DESCRIPTION

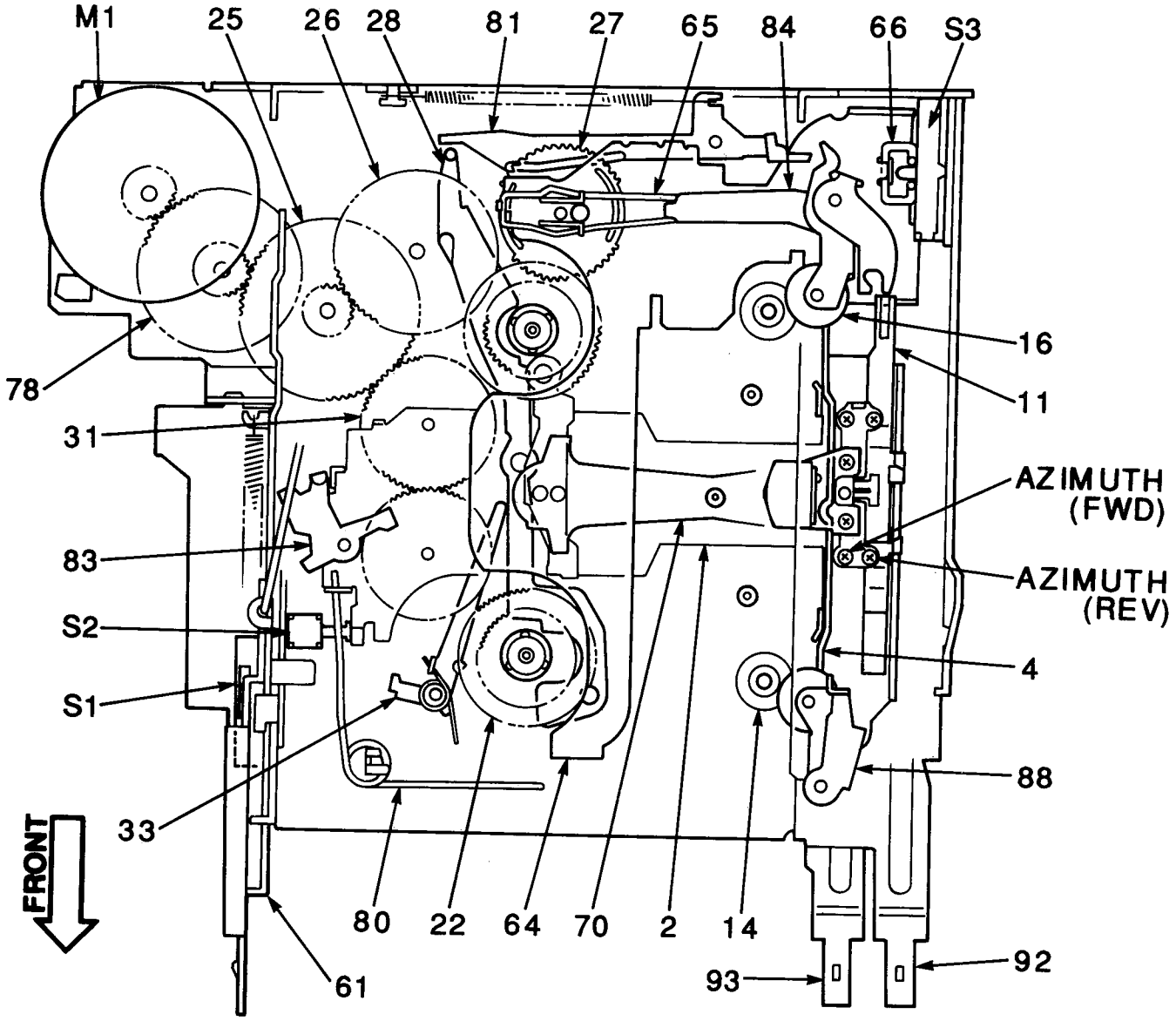

MECHANISM OPERATION DESCRIPTION

LOADING

1. Insert a cassette tape (❶).

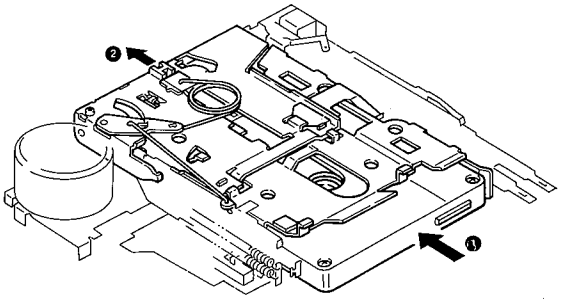

Fig. 1

2. The pack slider (50) presses the lever (49) (❷).
3. The lever (49) rotates and the push plate (58) lock releases. The push plate is pulled by spring (59) and moves forward (❸).

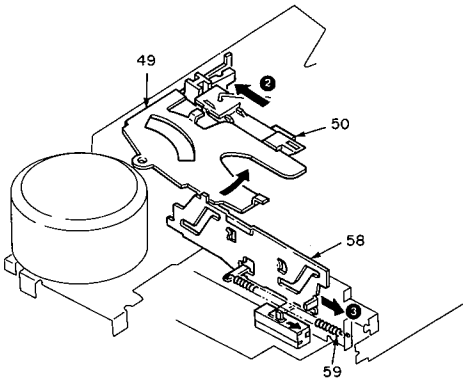

Fig. 2

4. The holder (48) lowers following the groove in the push plate (58) (❹).
5. The slide switch (S1) is pressed by the push plate (58) and turns ON. When S1 turns ON, current is supplied to the motor (M1) (❺).

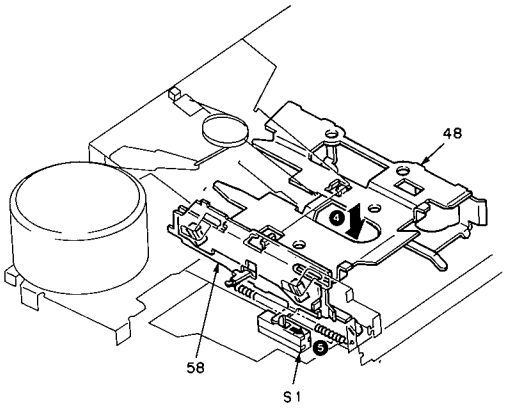

Fig. 3

MECHANISM OPERATION DESCRIPTION

6. The push arm (83) is pressed by the push plate (58) and rotates. The push arm (83) releases the head plate (2) lock (❻).
7. The head plate (2) is pulled forward by the spring (80) (❼).

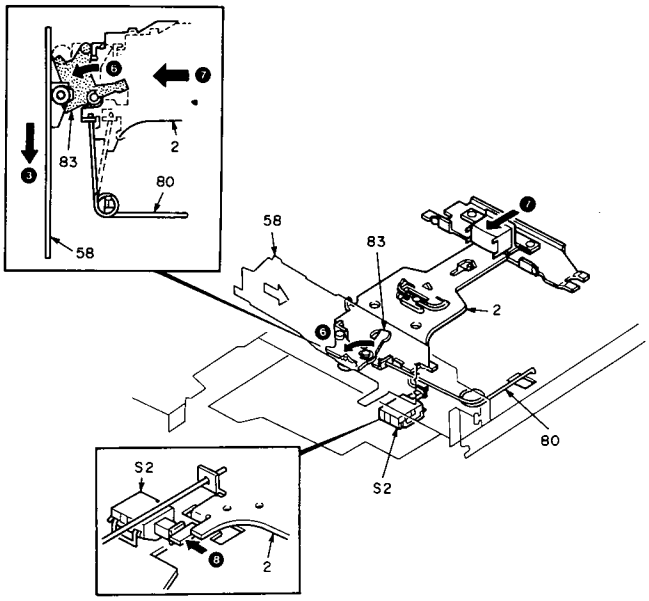

Fig. 4

8. The forward movement of the head plate (2) causes the push switch (S2) to turn ON (❽).
9. Through the forward movement of the head plate (2), the PR spring (4) causes the pinch roller assembly (16, 17) to press against the capstan assembly (74) (❾).

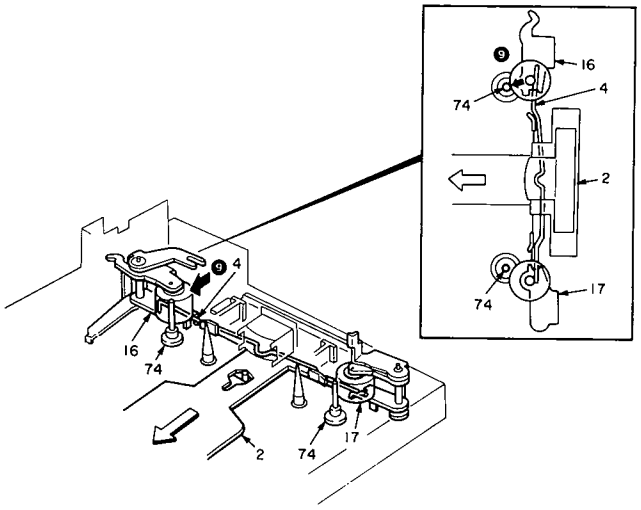

Fig. 5

10. The rotation of the motor is transmitted through various gears (78 → 25 → 31 → 6 →) to drive the winding side reel disk assembly (22) (❿).
11. The sending side reel disk assembly (22) is not driven by the motor rotation because it is separated from the play gear (6) (⓫).

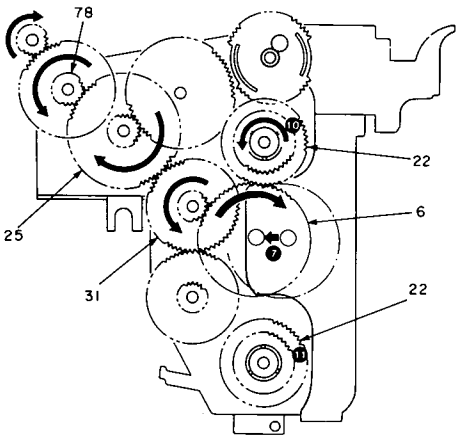

Fig. 6

MECHANISM OPERATION DESCRIPTION

PROGRAM (Manual Program Change)

1. When pressing FF/REW (92 and 93) levers at the same time (❶), the levers are placed into a slot on the PC (Play Change) plate (94) in direction of arrow (❷) in Fig.7.
2. The PC plate (94) moves in the direction of arrow (❸), trigger arm (81) is kicked in the direction of arrows (❹) and (❺), thereby releasing the turn-over gear (27).
3. The turn-over gear (27) is rotated in the direction of arrow (❻) by ED (End Detector) gear (26), which moves main plate (64).

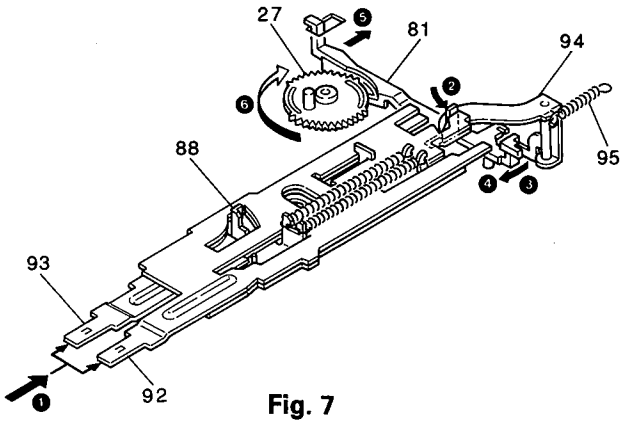

Fig. 7

4. The main plate (64) slides in direction of arrow (❼) in Fig.8 causing the following part movements;
   a) Head switch (10) movement is changed per arrow (❽).
   b) Force transferred from pinch roller spring (4) changes the relation of pinch roller and capstan to each other, per arrow (❾).
   c) Seesaw plate (20) is moved by the main plate and seesaw plate spring (65), and moves seesaw working plate (84). All FF/REW operation is performed by this seesaw plate movement. See arrow (❿).

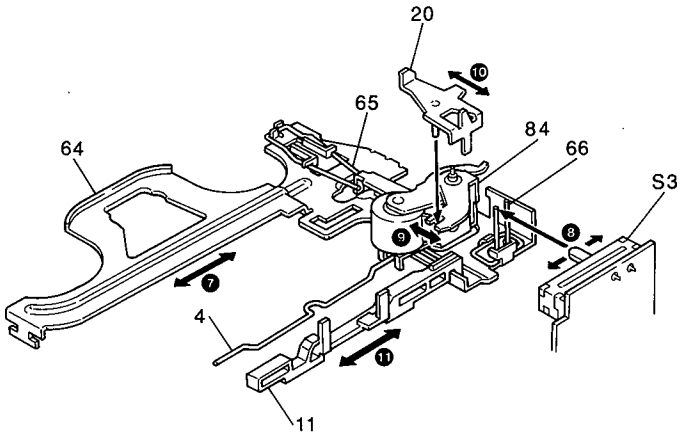

Fig. 8

   d) The shift plate (11) is moved in direction of arrow (⓫), and head moves up and down per arrows (⓬ , ⓭ and ⓮) in Fig.9.

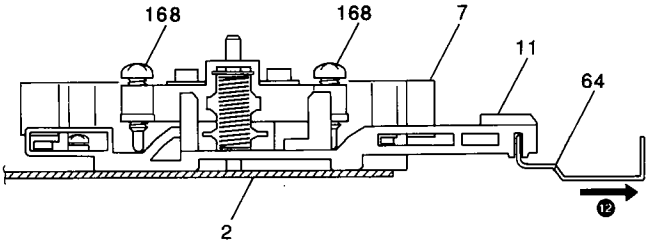

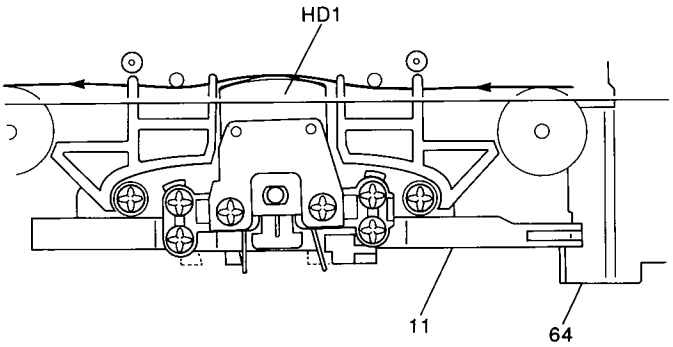

Fig. 10

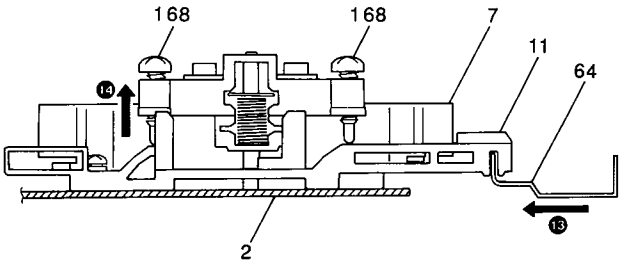

Fig. 9

MECHANISM OPERATION DESCRIPTION

e) The play gear metal (5) is engaged, per arrows (⓯) and (⓰) in Fig.11. Then play gear (6) is connected to take-up reel assembly (22) on forward side in FWD play, and connected to the other take-up reel assembly in REV play. Rotation from the play clutch (31) is transferred to take-up reel assembly per arrows (⓱) and (⓲) in Fig.11. As mentioned above, the direction in play mode can be changed. During play mode active, the head panel is moved backward by head panel return arm (88) in direction of arrow (⓳) in Fig.11. The Mute switch (S2) is turned on per arrow (⓴), and play mode is not reversed while FF/REW levers are pushed by operation of anti-reverse arm (33). See Fig.12.

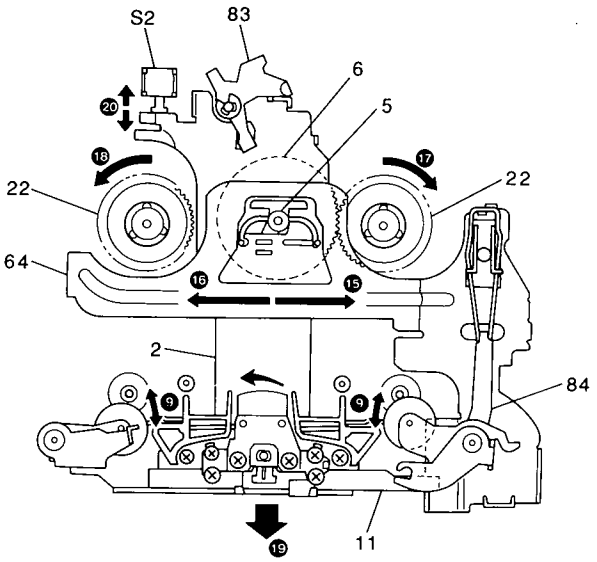

Fig. 11

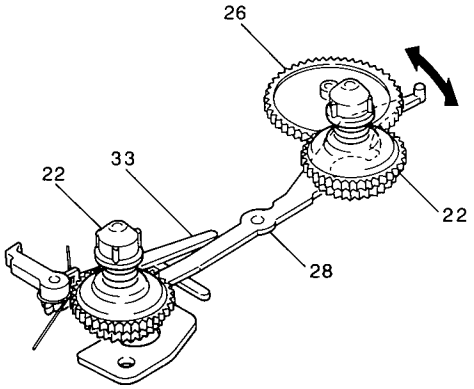

Fig. 12

MECHANISM OPERATION DESCRIPTION

FF

1. Press the FF lever (92) (❶).
2. The return arm (88) is pushed by the FF lever (92) and rotates (❷).
3. The head plate (2) is pulled by the return arm (88) and moves back (❸).
4. The seesaw plate (20) is pushed by the FF lever (92) and rotates (❹).

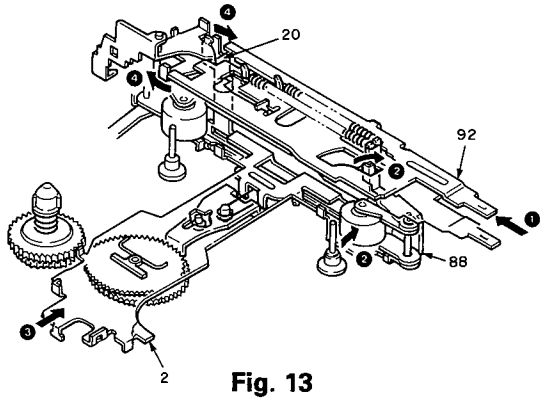

Fig. 13

5. The FR slide plate (86) is pulled by the seesaw plate (20) and moves forward (❺).
6. The working plate (70) is pulled by the FR slide plate (86), and the FR gear (71) engages with the clutch assembly (31) and winding side reel disk assembly (22) (❻).
7. The FF lever (92) is locked by the lock plate (96) (❼).

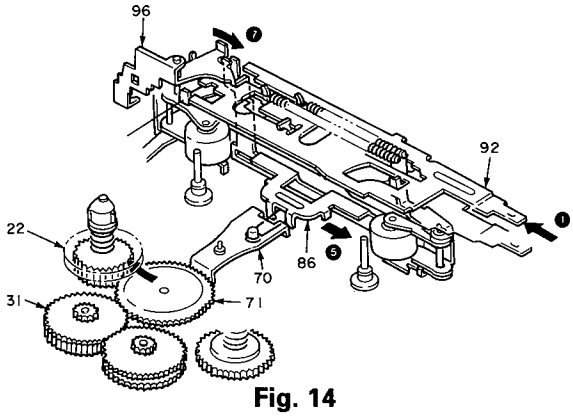

Fig. 14

8. If the REW lever (93) is pressed, the lock plate (96) rotates, the FF lever (92) lock is released and the deck enters play mode (❽).

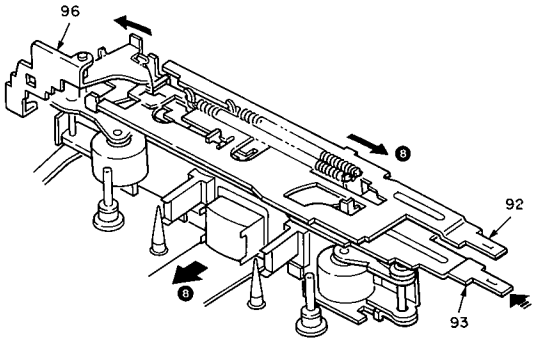

Fig. 15

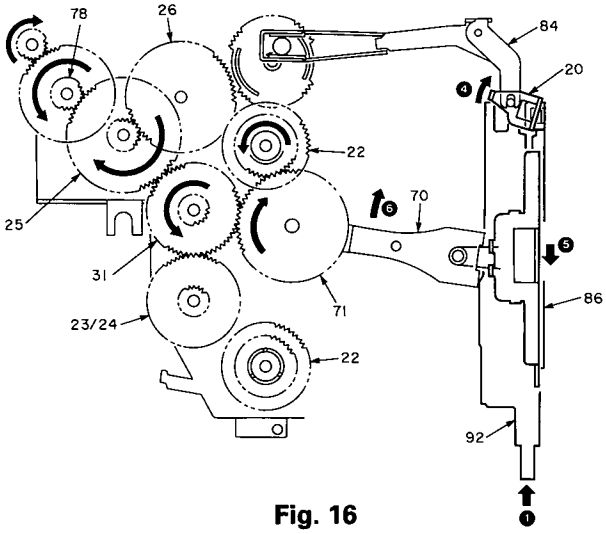

Fig. 16

MECHANISM OPERATION DESCRIPTION

REW

1. Press the REW lever (93) (❶).
2. The return arm (88) is pushed by the REW lever (93) and rotates (❷).
3. The head plate (2) is pulled back by the return arm (88) and moves back (❸).
4. The seesaw plate (20) is pushed by the REW lever (93) and rotates (❹).

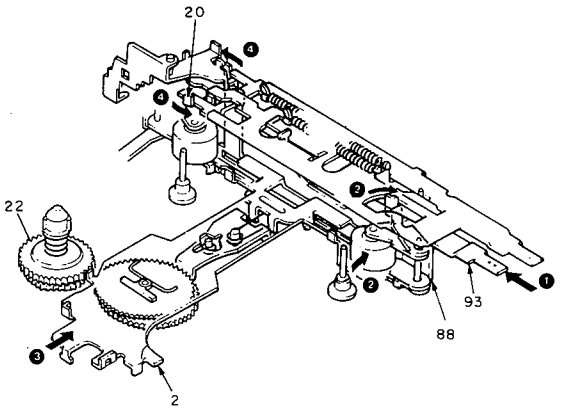

Fig. 17

5. The RF slide plate (86) is pushed by the seesaw plate (20) and moves backward (❺).
6. The working plate (70) is pulled by the RF side plate (86), and the FR gear (71) engages with the sending side reel disk assembly (22) and F gear (24) (❻).
7. The REW lever (93) is locked by the lock plate (96) (❼).

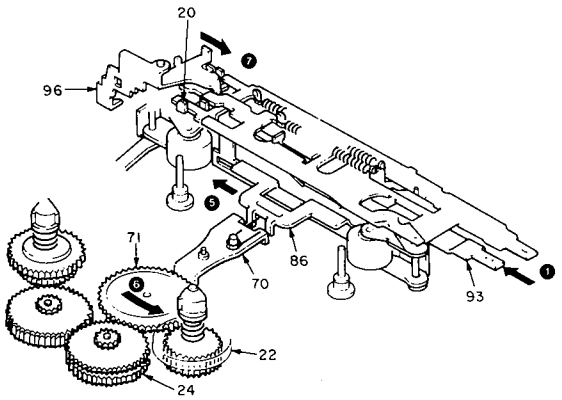

Fig. 18

8. If the FF lever (92) is pressed, the lock plate (96) rotates, the REW lever (93) lock is released and the deck enters play mode (❽).

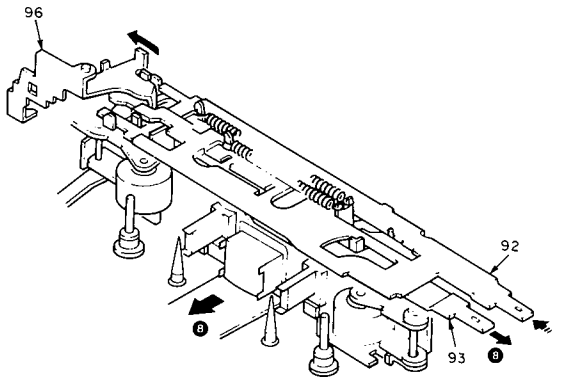

Fig. 19

MECHANISM OPERATION DESCRIPTION

Note : During reverse play, since the seesaw working plate (84) moves the center of the seesaw plate (20) to the right, pressing the FF lever activates the rewind operation and pressing the REW lever activates the fast-forward operation.

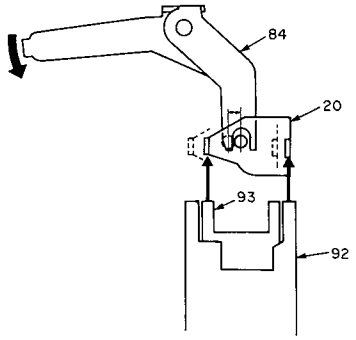

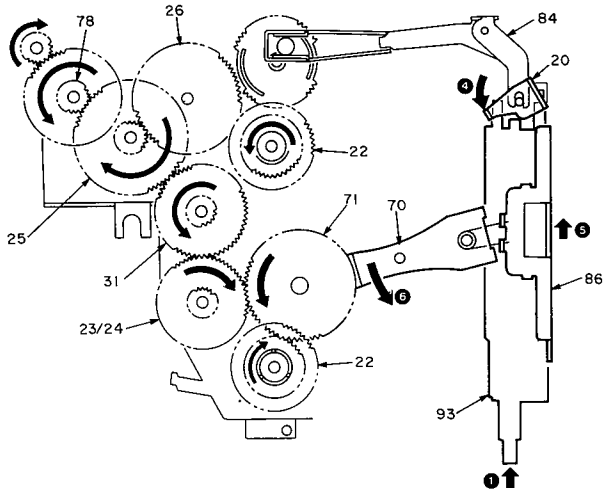

Fig. 20

AUTO REVERSE

1. When the end of the taps is reached during playback and the reel disk assembly (22) stops rotating, the ED plate (28) is pushed by the ED gear (26) (❶).
2. The ED gear (26) rotates and the boss pushes the ED plate (28) further (❷).
3. The ED plate (28) pushes the trigger arm (81) (❸).
4. The trigger arm (81) releases the reverse gear (27) lock (❹). (The "program" operation starts.)

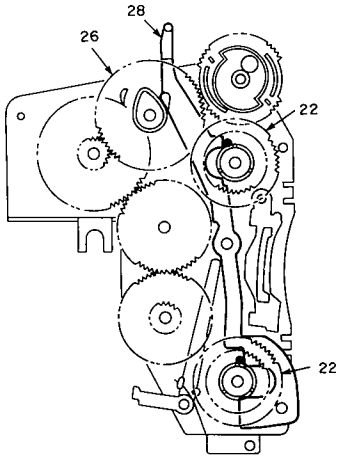

Fig. 21

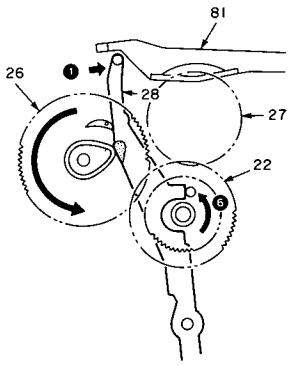

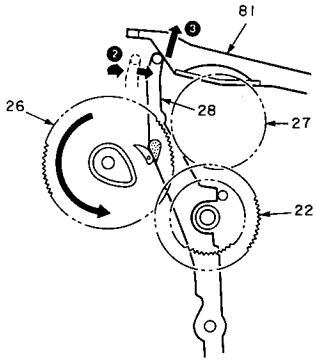

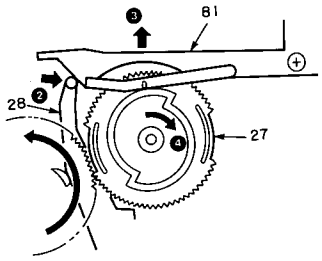

Fig. 22

MECHANISM OPERATION DESCRIPTION

5. In the same way, during FF and REW, the ED plate operates when the tape end is reached, When the plate (64) moves (❼), the lock plate (96) rotates (❽) and the FF/REW lever is released, causing the deck to enter play mode (❾).

6. The pin at the lower side of the reel disk assembly (22) resets the ED plate (28) (❻).

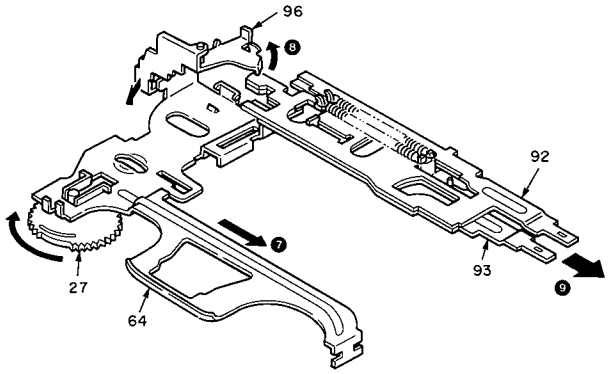

Fig. 23

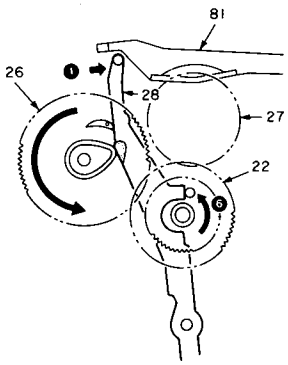

Fig. 24

EJECT

1. Press the EJ lever (61) (❶).
2. The push plate (58) is pushed by the EJ lever (61) and rotates the push arm (83) (❷).
3. The push arm (83) moves the head plate (2) back (❸).
4. The EJ lever (61) moves the rod (52) and rotates the PE plate (44) (❹).

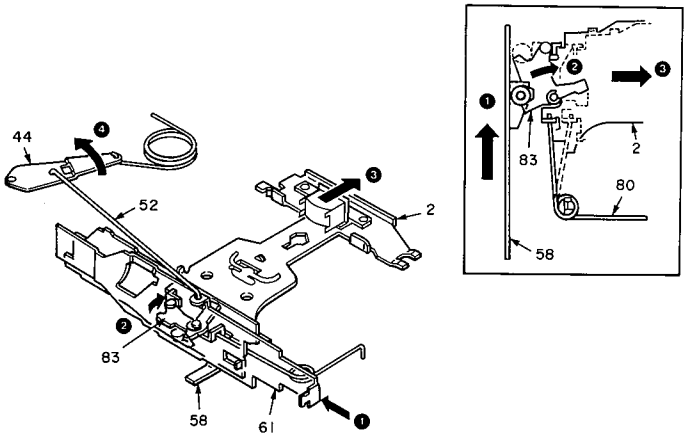

Fig. 25

5. The holder (48) moves up following the push plate (58) groove (❺).
6. The PE plate (44) turns the reverse spring (47) over and pushes out the pack slider (50) (❻).

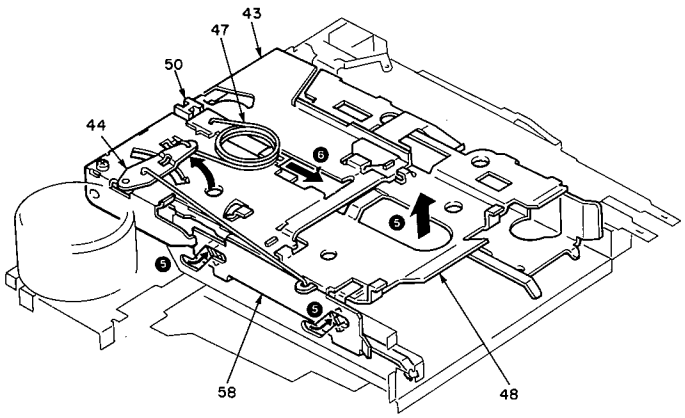

Fig. 26

ADJUSTMENT

Set the controls and switches as follows.

BALANCE	:center position	LOUD	:OFF	LOCAL	:OFF
FADER	:center position	T・ADV	:OFF	AUTO	:OFF
BASS	:center position	METAL	:OFF		
TREBLE	:center position	DOLBY NR	:OFF		

No	ITEM	INPUT SETTINGS	OUTPUT SETTINGS	TUNER (RECEIVER)	ALIGNMENT POINTS	ALIGN FOR	FIG.
FM SECTION							
1	DISCRI-MINATOR	(A) 98.1MHz 0dev 60dB μ	Connect a DC voltmeter between pins of TP1(X14)	FM 98.1MHz	T1 (X14 A/4)	0V	(a)
2	V C O	(A) 98.1MHz 0 dev 60dB μ	Connect a frecqency counter between pins of TP2(X14)	FM 98.1MHz	VR3 (X14 A/4)	19,000Hz	(b)
3	FM STOP LEVEL	(A) 98.1MHz 0 dev 20dB μ	–	FM 98.1MHz	VR 4 (X14 A/4)	STOP	(c)
AM SECTION							
1	AM STOP LEVEL	(D) 990 kHz 0% 35dB μ	–	AM 990kHz	Seme fixed Resistor (TU1)	STOP	(d)
CASSETTE DECK SECTION							
1	FWD AZIMUTH	MTT-114	Connect an AC voltmeter to TP1(X13)	TAPE PLAY	Ⓕ SCREW	MAX	(e)
2	REW AZIMUTH	MTT-114	Connect an AC voltmeter to TP1(X13)	TAPE PLAY	Ⓡ SCREW	MAX	(f)
3	TAPE SPEED	MTT-111	Connect a frecqency counterr to TP1(X13)	TAPE PLAY	Seme fixed Resistor (DC MOTOR)	3.030Hz	(g)
4	DOLBY LEVEL	MTT-150 DOLBY TAPE	Connect an AC voltmeter to TP1(X13)	TAPE PLAY	VR1(L) VR2(R) (X13)	300mV rms	(h)

*Test mode : Turn power ON while holding the [BAND] and [6] keys depressed.
All of the LCD elements light.

To quit : Power OFF.

ADJUSTMENT

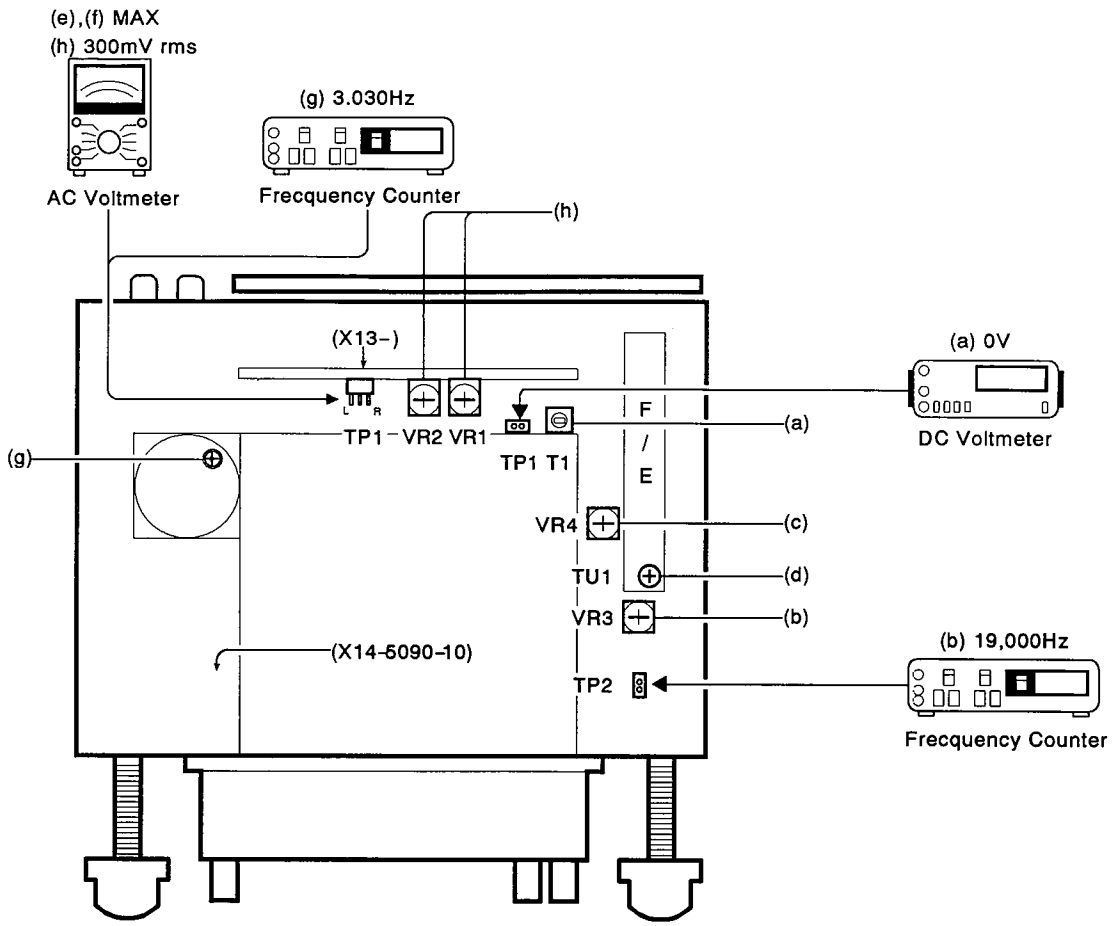
(e),(f) MAX
(h) 300mV rms
AC Voltmeter
(g) 3.030Hz
Frecquency Counter
(h)
(X13-)
(a) 0V
DC Voltmeter
(a)
(g)
TP1 - VR2 VR1
TP1 T1
F
/
E
VR4
(c)
TU1
(d)
VR3
(b)
(X14-5090-10)
(b) 19,000Hz
TP2
Frecquency Counter

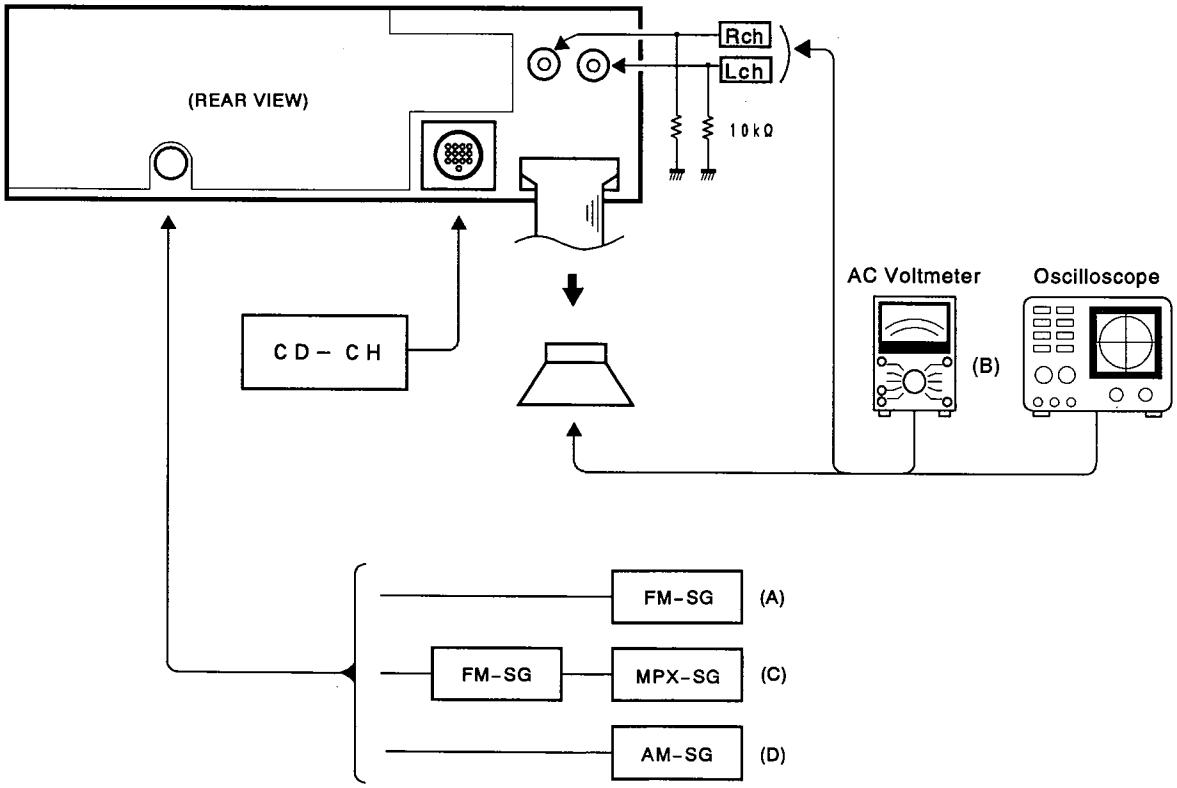
(REAR VIEW)
Rch
Lch
10kΩ
AC Voltmeter
Oscilloscope
(B)
CD-CH
FM-SG
(A)
FM-SG
MPX-SG
(C)
AM-SG
(D)

ADJUSTMENT

Head Angle Adjustment

Head height alignment procedure (type D)

- During FWD transport, adjust screws Ⓕ and Ⓕ' so that line A of 2-line tape passes trough the center of the head shield plate (white section).
- During REV transport, adjust screws Ⓡ and Ⓡ' so that line B of 2-line tape passes trough the center of the head shield plate (white section).
- After the alignment above, reverse the transport direction and check the FWD alignment again. If it is deviated, perform alignment again. (Tape used : SCC-1859, manufacured by A-BEX)

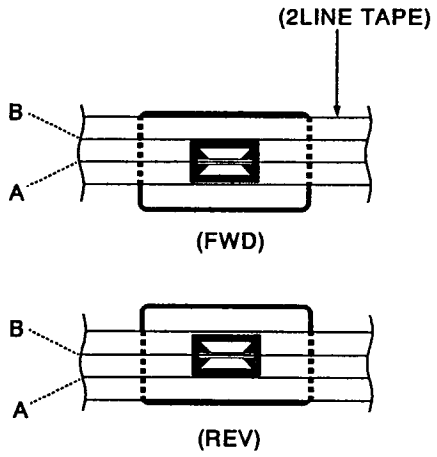

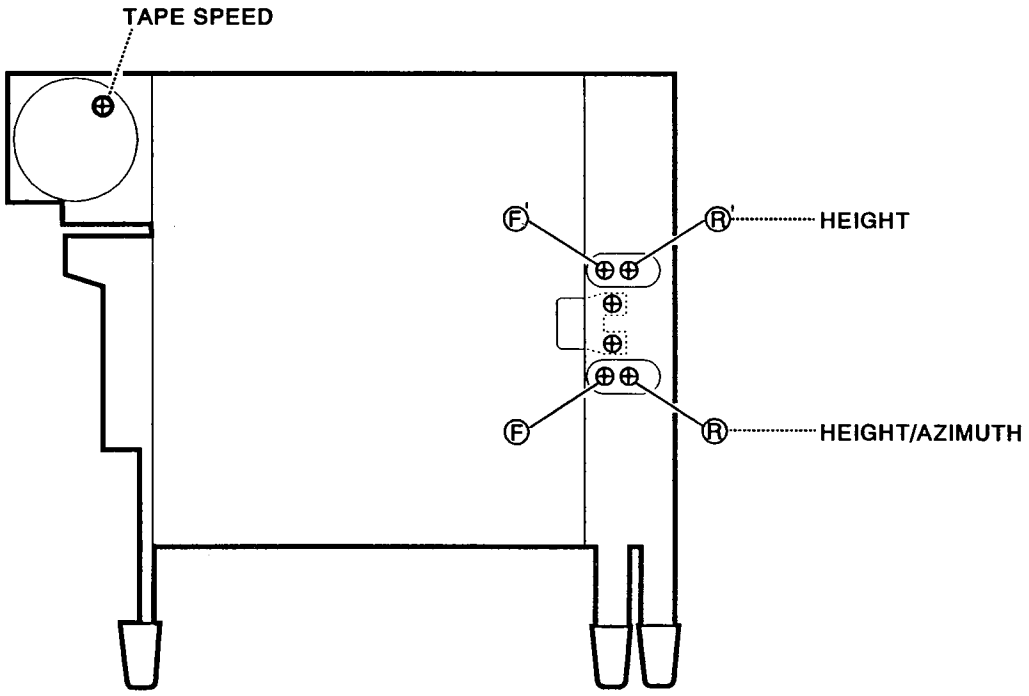

PC BOARD (COMPONENT SIDE VIEW)

SUB CIRCUIT UNIT
(X13-8570-10)

X13-8570-10 (J74-0306-12)

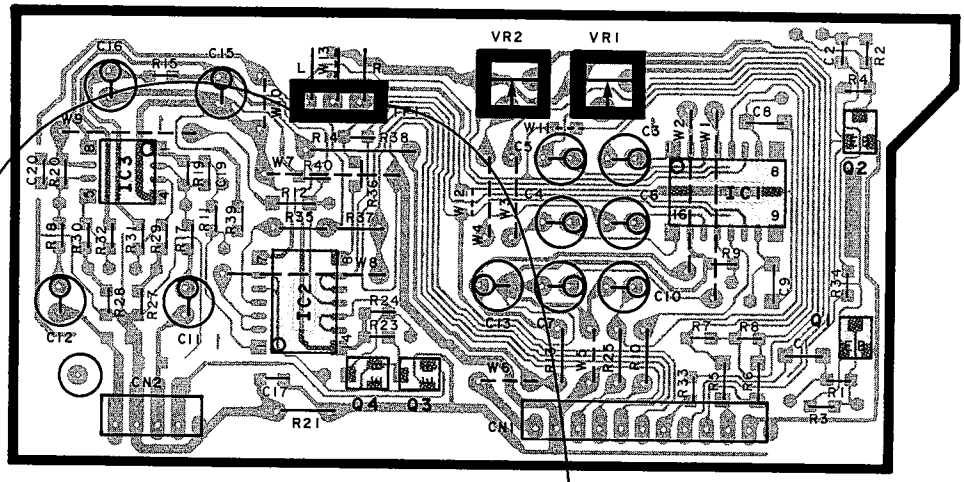

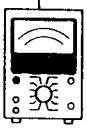

AC voltmeter
(e) FWD azimuth : Max
(f) REW azimuth : Max
(h) Dolby level : 300mV rms

Frequency counter
(g) Tape speed : 3.030Hz

Refer to the schematic diagram for the values of resistors and capacitors.

PC BOARD (FOIL SIDE VIEW)

SUB CIRCUIT UNIT
(X13-8570-10)
X13-8570-10 (J74-0306-12)

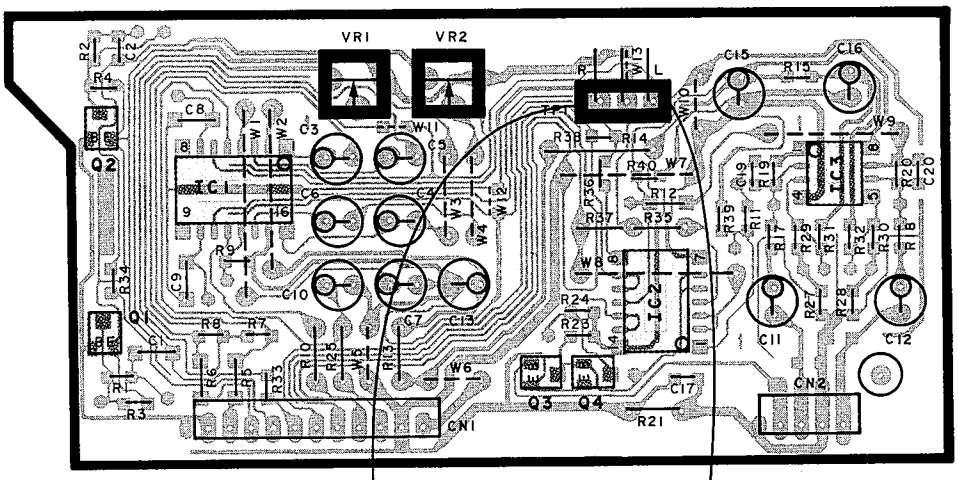

Frequency counter
(g) Tape speed : 3.030Hz

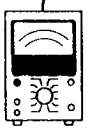

AC voltmeter
(e) FWD azimuth : Max
(f) REW azimuth : Max
(h) Dolby level : 300mV rms

Refer to the schematic diagram for the values of resistors and capacitors.

PC BOARD (COMPONENT SIDE VIEW)

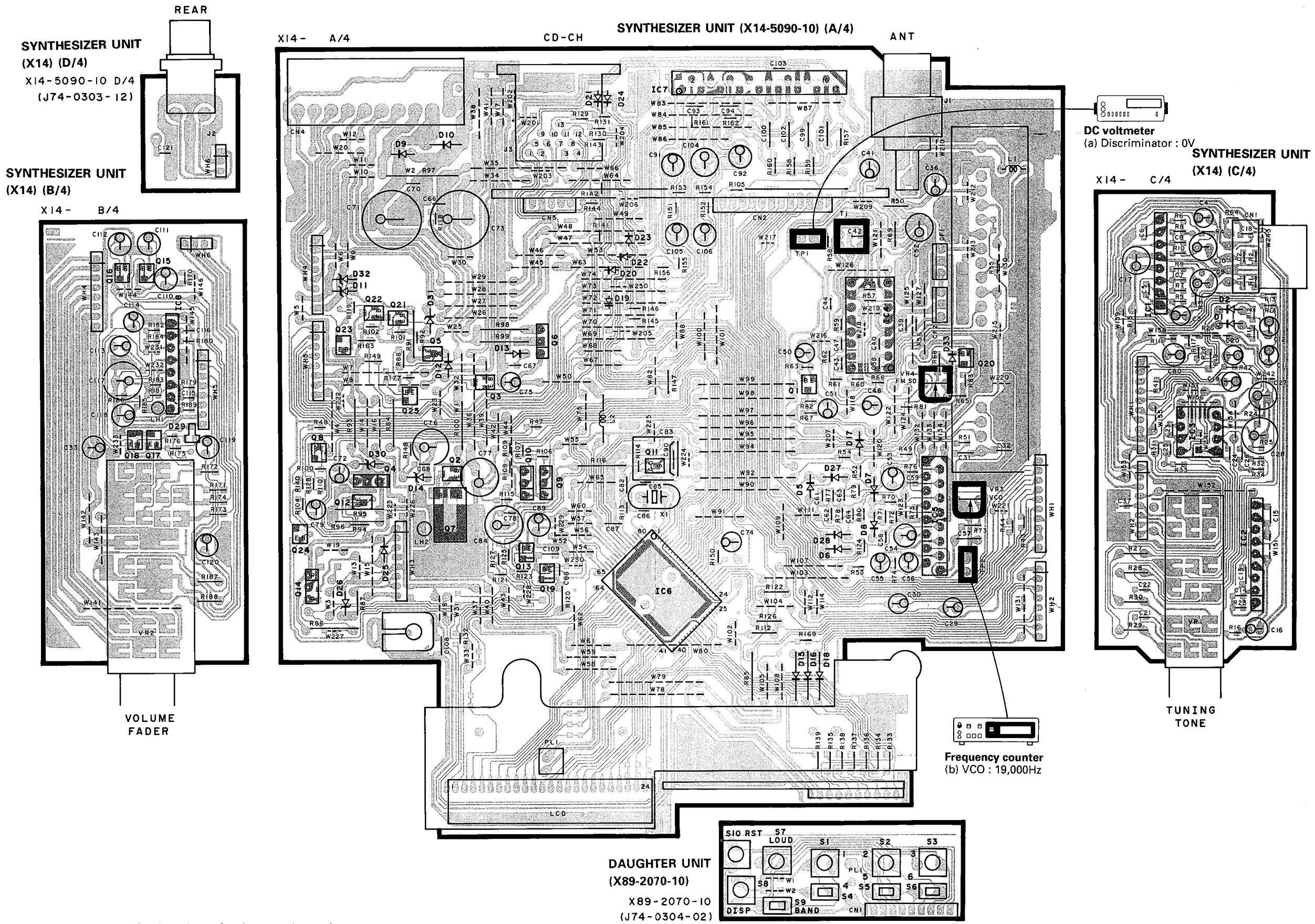

Refer to the schematic diagram for the values of resistors and capacitors.

PC BOARD (FOIL SIDE VIEW)

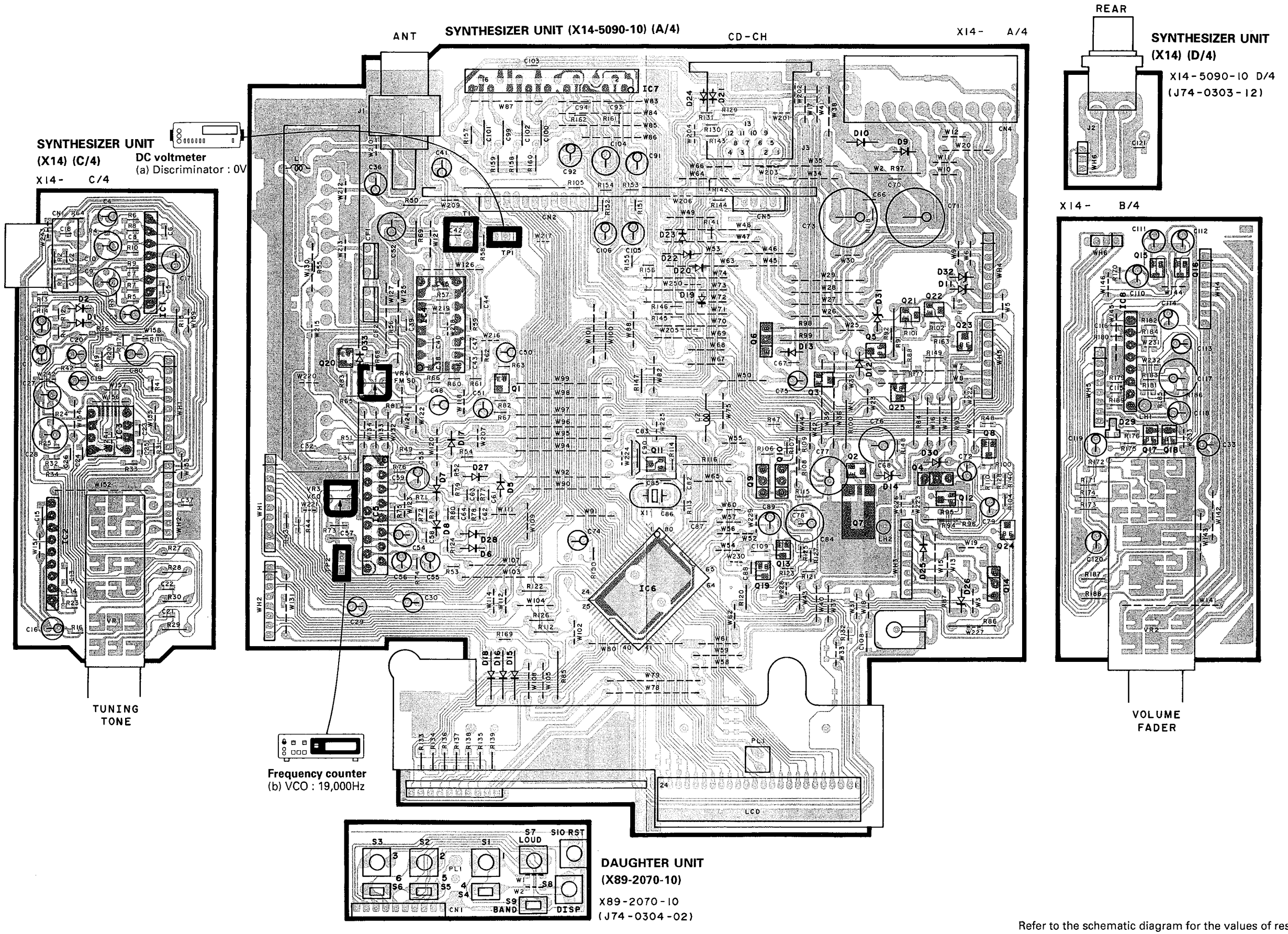

Refer to the schematic diagram for the values of resistors and capacitors.

PARTS LIST

SYNTHESIZER UNIT (X14-5090-10)

Ref No. 参照番号	New 新	Parts No. 部品番号	Description 部品名／規格			
R58		RK73FB2A223J	CHIP R	22K	J	1/10W
R59		RK73FB2A103J	CHIP R	10K	J	1/10W
R60		RK73FB2A433J	CHIP R	43K	J	1/10W
R61		RK73FB2A103J	CHIP R	10K	J	1/10W
R62		RK73FB2A123J	CHIP R	12K	J	1/10W
R63		RK73FB2A473J	CHIP R	47K	J	1/10W
R64		RK73FB2A103J	CHIP R	10K	J	1/10W
R65		RK73EB2B473J	CHIP R	47K	J	1/8W
R66		RK73FB2A103J	CHIP R	10K	J	1/10W
R67		RK73FB2A562J	CHIP R	5.6K	J	1/10W
R68		RK73EB2B222J	CHIP R	2.2K	J	1/8W
R70		RK73FB2A822J	CHIP R	8.2K	J	1/10W
R71		RK73FB2A123J	CHIP R	12K	J	1/10W
R72		RK73FB2A203J	CHIP R	20K	J	1/10W
R73		RK73EB2B163J	CHIP R	16K	J	1/8W
R74		RK73FB2A102J	CHIP R	1.0K	J	1/10W
R75		RK73FB2A623J	CHIP R	62K	J	1/10W
R76		RK73FB2A822J	CHIP R	8.2K	J	1/10W
R77 ,78		RK73FB2A332J	CHIP R	3.3K	J	1/10W
R79 ,80		RK73FB2A512J	CHIP R	5.1K	J	1/10W
R81		RK73FB2A273J	CHIP R	27K	J	1/10W
R82		RK73FB2A104J	CHIP R	100K	J	1/10W
R83		RK73FB2A222J	CHIP R	2.2K	J	1/10W
R85		RD14DB2H561J	SMALL-RD	560	J	1/2W
R88		RK73EB2B103J	CHIP R	10K	J	1/8W
R92		RK73FB2A331J	CHIP R	330	J	1/10W
R93		RD14DB2H2R2J	SMALL-RD	2.2	J	1/2W
R94		RK73EB2B511J	CHIP R	510	J	1/8W
R95 ,96		RD14DB2H271J	SMALL-RD	270	J	1/2W
R100		RD14DB2H4R7J	SMALL-RD	4.7	J	1/2W
R101		RK73FB2A682J	CHIP R	6.8K	J	1/10W
R102		RK73FB2A561J	CHIP R	560	J	1/10W
R103		RK73FB2A223J	CHIP R	22K	J	1/10W
R104,105		RK73FB2A472J	CHIP R	4.7K	J	1/10W
R106		RK73FB2A223J	CHIP R	22K	J	1/10W
R107		RK73FB2A332J	CHIP R	3.3K	J	1/10W
R108		RK73FB2A223J	CHIP R	22K	J	1/10W
R109		RK73FB2A332J	CHIP R	3.3K	J	1/10W
R110		RK73FB2A223J	CHIP R	22K	J	1/10W
R111		RK73FB2A473J	CHIP R	47K	J	1/10W
R113		RK73FB2A103J	CHIP R	10K	J	1/10W
R114		RK73FB2A562J	CHIP R	5.6K	J	1/10W
R115		RK73FB2A151J	CHIP R	150	J	1/10W
R117		RK73FB2A153J	CHIP R	15K	J	1/10W
R118		RK73FB2A163J	CHIP R	16K	J	1/10W
R119		RK73FB2A162J	CHIP R	1.6K	J	1/10W
R121		RK73FB2A473J	CHIP R	47K	J	1/10W
R123		RK73FB2A473J	CHIP R	47K	J	1/10W
R124,125		RK73FB2A102J	CHIP R	1.0K	J	1/10W
R127		RK73FB2A102J	CHIP R	1.0K	J	1/10W
R128		RK73FB2A472J	CHIP R	4.7K	J	1/10W
R129-131		RK73FB2A222J	CHIP R	2.2K	J	1/10W
R132		RK73FB2A102J	CHIP R	1.0K	J	1/10W
R133-139		RK73EB2B102J	CHIP R	1.0K	J	1/8W
R140		RK73FB2A752J	CHIP R	7.5K	J	1/10W

Ref No. 参照番号	New 新	Parts No. 部品番号	Description 部品名／規格			
R141		RK73FB2A102J	CHIP R	1.0K	J	1/10W
R142		RK73FB2A472J	CHIP R	4.7K	J	1/10W
R143,144		RK73FB2A101J	CHIP R	100	J	1/10W
R145,146		RK73FB2A104J	CHIP R	100K	J	1/10W
R148		RK73FB2A101J	CHIP R	100	J	1/10W
R149		RK73EB2B103J	CHIP R	10K	J	1/8W
R150		RK73FB2A472J	CHIP R	4.7K	J	1/10W
R151,152		RK73FB2A182J	CHIP R	1.8K	J	1/10W
R153,154		RK73FB2A471J	CHIP R	470	J	1/10W
R155		RK73FB2A562J	CHIP R	5.6K	J	1/10W
R156		RK73FB2A332J	CHIP R	3.3K	J	1/10W
R157-160		RK73EB2B4R7J	CHIP R	4.7	J	1/8W
R161,162		RK73FB2A511J	CHIP R	510	J	1/10W
R163		RK73EB2B473J	CHIP R	47K	J	1/8W
R169		RK73FB2A472J	CHIP R	4.7K	J	1/10W
R170		RK73FB2A473J	CHIP R	47K	J	1/10W
R171,172		RK73EB2B222J	CHIP R	2.2K	J	1/8W
R173,174		RK73EB2B392J	CHIP R	3.9K	J	1/8W
R175,176		RK73FB2A752J	CHIP R	7.5K	J	1/10W
R177		RK73FB2A104J	CHIP R	100K	J	1/10W
R179,180		RK73FB2A223J	CHIP R	22K	J	1/10W
R181,182		RK73FB2A332J	CHIP R	3.3K	J	1/10W
R183,184		RK73FB2A473J	CHIP R	47K	J	1/10W
R185		RK73FB2A153J	CHIP R	15K	J	1/10W
R186		RK73FB2A183J	CHIP R	18K	J	1/10W
R189		RK73FB2A101J	CHIP R	100	J	1/10W
VR1 3D	*	R24-0654-05	POTENTIOMETER(50KX4,SW)			
VR2 2C	*	R29-0618-05	POTENTIOMETER(80X2,10KX2)			
VR3		R12-1619-05	TRIMMING POT.(4.7K)			
VR4		R12-3686-05	TRIMMING POT.(22K)			
W201-210		R92-2053-05	CHIP R	0	J	1/8W
W212,213		R92-2053-05	CHIP R	0	J	1/8W
W215		R92-2052-05	CHIP R	0	J	1/10W
W216		R92-2053-05	CHIP R	0	J	1/8W
W217,218		R92-2052-05	CHIP R	0	J	1/10W
W219,220		R92-2053-05	CHIP R	0	J	1/8W
W221-224		R92-2052-05	CHIP R	0	J	1/10W
W225,226		R92-2053-05	CHIP R	0	J	1/8W
W227,228		R92-2052-05	CHIP R	0	J	1/10W
W231		R92-2052-05	CHIP R	0	J	1/10W
W232,233		R92-2053-05	CHIP R	0	J	1/8W
W241-243		R92-2053-05	CHIP R	0	J	1/8W
W250		R92-2053-05	CHIP R	0	J	1/8W
D1 ,2		1SS133	DIODE			
D5 -8		1SS133	DIODE			
D9		AM01Z	DIODE			
D9		ERA15-01	DIODE			
D10		RL254	DIODE			
D11		RD6.2JS(B2)	ZENER DIODE			
D12		1SS133	DIODE			
D13		RD5.6JS(B2)	ZENER DIODE			
D14	*	UZ-9.1BS(B)	ZENER DIODE			
D15 ,16		1S1555	DIODE			
D17		1SS133	DIODE			

E: Europe **W**: Without Europe **P**: Canada **X**: Australia
K: U.S.A. and Canada **M**: Without Europe, U.S.A. and Canada

KRC-3006

PARTS LIST

× New Parts
Parts without Parts No. are not supplied.
Les articles non mentionnes dans le Parts No. ne sont pas fournis.
Teile ohne Parts No. werden nicht geliefert.

Ref No. 参照番号	New 新	Parts No. 部品番号	Description 部品名／規格
D18		1S1555	DIODE
D19 -24		MA8056-M	ZENER DIODE
D25		AM01Z	DIODE
D25		ERA15-01	DIODE
D26	*	UZ-4.7BS(C)	ZENER DIODE
D27 ,28		1SS133	DIODE
D29		DAP202K	DIODE
D30	*	RD11JS(B2)	ZENER DIODE
D31 ,32		RD6.2JS(B2)	ZENER DIODE
D33		MA110	DIODE
D33		1SS355	DIODE
IC1		LA3161	IC(PREAMP X2)
IC2		AN6262N	IC(T.ADV)
IC3		NJM4565D	IC(OP AMP X2)
IC4	*	LA1143	ANALOG IC (FM IF)
IC5		LA3370	IC(FM MPX)
IC6	*	LC72329-8839	MI-COM IC
IC7 2D	*	TA8232H	ANALOG IC (POWER AMP)
IC8		NJM4565L	IC(OP AMP X2)
Q1		DTC144EK	DIGITAL TRANSISTOR
Q2		2SC2412K	TRANSISTOR
Q3		DTA114EK	DIGITAL TRANSISTOR
Q4		2SD1858	TRANSISTOR
Q5		2SC2412K	TRANSISTOR
Q6		2SC4038	TRANSISTOR
Q7		2SB1184	TRANSISTOR
Q8		2SA1037K	TRANSISTOR
Q9		2SA1559(R)	TRANSISTOR
Q10		2SA1561	TRANSISTOR
Q11		2SK536	FET
Q12		DTC114YK	DIGITAL TRANSISTOR
Q13		DTA124EK	DIGITAL TRANSISTOR
Q14		2SA1428	TRANSISTOR
Q15 ,16		DTC114TK	DIGITAL TRANSISTOR
Q17 ,18	*	2SD2114K	TRANSISTOR
Q19		DTC144EK	DIGITAL TRANSISTOR
Q20 -23		2SC2412K	TRANSISTOR
Q24		DTC124EK	DIGITAL TRANSISTOR
Q25		2SA1037K	TRANSISTOR
TU1 2D	*	W02-1424-05	FM/AM FRONT-END
DAUGHTER UNIT (X89-2070-10)			
PL1		B30-1306-05	LAMP (5.5V .125A)
W1 ,2		R92-2053-05	CHIP R 0 J 1/8W
S1 -3	*	S70-0822-05	TACT SWITCH
S4 -6		S70-0802-05	TACT SWITCH
S7 ,8	*	S70-0822-05	TACT SWITCH
S9		S70-0802-05	TACT SWITCH
S10	*	S70-0822-05	TACT SWITCH
CASSETTE MECHANISM ASS'Y (D40-1050-05)			
2 3B	*	J21-7524-08	MOUNTING HARDWARE (P.B. HEAD)
3 3B		D14-0630-08	SPRING ROLLER
4 3B		G01-2613-08	TORSION SPRING (PINCH ROLLER)
5 3B	*	D10-2907-08	SLIDER

SYNTHESIZER UNIT (X14-5090-10)

Ref No. 参照番号	New 新	Parts No. 部品番号	Description 部品名／規格
6 3B		D13-1102-08	GEAR
7 3B	*	J90-0741-08	TAPE GUIDE
8 2B	*	J19-4554-08	HEAD HOLDER
9 2B	*	J11-0604-08	CLAMPER
11 3B	*	D10-2908-08	SHIFT PLATE
12 3B	*	G01-2695-08	H.G SPRING
13 3B	*	J90-0742-08	WASHER
15 2B	*	E39-0060-08	WIRING HARNESS
16 2B		D10-2752-08	PINCH ROLLER ASSY (F)
17 2A		D10-2753-08	PINCH ROLLER ASSY (R)
19 2B	*	J21-7528-08	MOUNTING HARDWARE
20 1B	*	D10-2909-08	SLIDER
22 3A	*	D03-0308-08	REEL DISK
23 3A		D13-1103-08	GEAR
24 3A		D13-1104-08	GEAR
25 3A		D13-1105-08	GEAR
26 3A		D13-1106-08	GEAR
27 3A		D13-1107-08	GEAR (REV)
28 3A		D10-2755-08	ARM
29 3A	*	A11-0889-08	SUB CHASSIS ASSY
30 3A		G01-2618-08	COMPRESSION SPRING
31 3A		D13-1111-08	GEAR
32 3A		D10-2756-08	ARM
33 3A		D10-2757-08	ARM
34 3A		G01-2614-08	TORSION SPRING
36 3A		D03-0307-08	REEL DISK ASSY
41 2A		E60-0801-08	CONNECTOR
43 1B		D10-2758-08	ARM
44 1A		D10-1346-08	SLIDER
45 1B		G01-1574-08	TENSION SPRING
46 1A		G11-1550-08	CUSHION
47 1A	*	G01-2696-08	TORSION SPRING
48 1A		J19-4451-08	HOLDER
49 1A		D10-2759-08	ARM
50 1A		D10-2768-08	SLIDER
51 1B		G02-1153-08	FLAT SPRING
52 1A		G09-0051-08	SPRING
56 2A		D14-0631-08	ROLLER
57 2A		D14-0632-08	ROLLER
58 2A		D10-2747-08	LEVER
59 2A		G01-2620-08	TENSION SPRING
60 2A		G01-2621-08	TENSION SPRING
61 2A		D10-2748-08	LEVER
64 2B		D10-2769-08	SLIDER
65 2B		G09-2006-08	SPRING
66 2B		G09-2007-08	SPRING
70 3A		D10-2754-08	ARM
71 2A		D13-1109-08	GEAR
72 3A		G01-2616-08	TORSION SPRING
74 3B	*	D01-0605-08	FLYWHEEL ASSY
75 3B		D16-0606-08	BELT
77 2A		G01-2619-08	COMPRESSION SPRING
78 2B		D13-1110-08	GEAR
79 2B		D15-0909-08	PULLEY
80 2A		G01-2617-08	TORSION SPRING

E: Europe **W**: Without Europe **P**: Canada **X**: Australia
K: U.S.A. and Canada **M**: Without Europe, U.S.A. and Canada

⚠ indicates safety critical components.

PARTS LIST

CASSETTE MECHANISM ASS'Y (D40-1050-05)

Ref No. 参照番号		New 新	Parts No. 部品番号	Description 部品名／規格
81	2B		D10-2760-08	ARM
82	2B		N09-4055-08	SCREW
83	2A		D10-2761-08	ARM
84	2B		D10-2762-08	ARM
85	1A		G01-2622-08	TENSION SPRING
86	3B		D10-2749-08	LEVER
87	3A		N09-4056-08	SCREW
88	2A		D10-2763-08	ARM
89	2B		G01-2623-08	TENSION SPRING
90	2B		N19-2038-08	FLAT WASHER
91	1B	*	G01-2697-08	TENSION SPRING
92	1B	*	D10-2910-08	LEVER
93	1B	*	D10-2911-08	LEVER
94	2B		D10-2764-08	ARM
95	2B		G01-2625-08	TENSION SPRING
96	1B		D10-2765-08	ARM
97	1B		G01-2626-08	TENSION SPRING
98	3B		N19-2035-08	FLAT WASHER
99	1B		D10-2766-08	ARM
100	1B		T94-0406-08	SOLENOID COIL
101	1B		T94-0407-08	SOLENOID
102	1B	*	G01-2698-08	TENSION SPRING
103	2B	*	D19-0604-08	PIN
104	2B	*	G01-2627-08	TENSION SPRING
150	2B		N09-4009-05	SCREW
151	3B		N09-4009-05	SCREW
153	3B		N19-2036-08	FLAT WASHER
154	2A		N19-2037-08	FLAT WASHER
155	1A		N84-2003-45	SCREW
156	1A		N24-3015-60	E TYPE RETAINING RING
157	1B		N09-4059-08	SCREW
158	2B		N19-2043-08	FLAT WASHER
159	2A		N19-2039-08	FLAT WASHER
160	2B		N24-3020-60	E TYPE RETAINING RING
161	2A		N09-4058-08	SCREW
162	3B	*	N19-2050-08	FLAT WASHER
163	2A		N19-2041-08	FLAT WASHER
164	2A		N19-2042-08	FLAT WASHER
165	3A		N09-4092-08	SCREW
166	2B		N09-4060-08	SCREW
167	3B	*	N09-4109-08	SCREW
168	3B	*	N09-4110-08	SCREW
HD1	2B	*	T31-0214-08	PLAYBACK HEAD
M1	2A	*	T42-0733-08	MOTOR ASSY
S1	2A		S62-0813-08	SLIDE SWITCH
S2	2A		S68-0803-08	PUSH SWITCH
S3	2B		S62-0812-08	SLIDE SWITCH

E: Europe **W**: Without Europe **P**: Canada **X**: Australia
K: U.S.A. and Canada **M**: Without Europe, U.S.A. and Canada

KRC-3006

SPECIFICATIONS

FM Tuner Section

Frequency Range
- 200kHz space ..... 87.9MHz~107.9MHz
- 50kHz space ..... 87.5MHz~108.0MHz

Usable Sensitivity 13.2dBf (1.3μV/75Ω)
50dB Quieting Sensitivity 15.2dBf (1.6μV/75Ω)
Frequency Response (±3dB) ..... 30Hz~15kHz
Signal to Noise Ratio 70dB
Selectivity 70dB
Capture Ratio 2.0dB
Image Response Ratio 70dB
IF Response Ratio 120dB
Stereo Separation (1kHz) 38dB

AM Tuner Section

Frequency Range
- 10kHz space ..... 530kHz~1700kHz
- 9kHz space ..... 531kHz~1611kHz

Usable Sensitivity (S/N 20dB) 28dB (30μV)

Cassette Deck Section

Tape Speed ..... 4.76cm/sec.
Wow and Flutter (WRMS) ..... 0.12% (WRMS)
Fast Winding Time (C-60) ..... 100sec.
Frequency Response
- 120μs ..... 30Hz~14kHz(±3dB)
- 70μs ..... 30Hz~16kHz(±3dB)

Stereo Separation (1kHz) 42dB
Signal to Noise Ratio 54dB
Signal to Noise Ratio (Dolby-B NR ON) 63dB

Audio Section

Maximum Output Power ..... 25W x 2 or 15W x 4
Output Power
- 10% THD, 1kHz, 4Ω ..... 20W x 2
- 1% THD, 30Hz~20kHz, 4Ω ..... 15W x 2

Tone Action
- Bass ..... 100Hz±10dB
- Trebel ..... 10kHz±10dB

Preout Level/Load ..... 1000mV (MAX.)/10kΩ

General

Operating Voltage ..... 14.4V (11~16V allowable)
Current Consumption ..... 6A at Rated Power
Installation Size (W x H x D)
..... 180 x 50 x 130 (mm)
..... 7-1/16 x 1-15/16 x 5-1/8 (in.)
Weight 1.3kg (2.9lb)

KENWOOD follows a policy of continuous advancements in development. For this reason specifications may be changed without notice.

KENWOOD CORPORATION
Alive Mitake, 2-5, 1-chome Shibuya, Shibuya-ku, Tokyo 150, Japan
KENWOOD SERVICE CORPORATION
P.O. BOX 22745, 2201 East Dominguez St., Long Beach, CA 90801-5745, U.S.A.
KENWOOD ELECTRONICS CANADA INC.
6070 Kestrel Road, Mississauga, Ontario, Canada L5T 1S8
KENWOOD ELECTRONICS LATIN AMERICA S.A.
P.O. BOX 55-2791, Piso 6 Plaza Chase, Cl. 47 y Aquilino de la Guardia, Panama, Republic de Pana
TRIO-KENWOOD U.K. LIMITED
KENWOOD House, Dwight Road, Watford, Herts., WD1 8EB United Kingdom
KENWOOD ELECTRONICS BENELUX N.V.
Mechelsesteenweg 418 B-1930 Zaventem, Belgium
KENWOOD ELECTRONICS DEUTSCHLAND GMBH
Rembrücker-Str. 15, 63150 Heusenstamm, Germany
TRIO-KENWOOD FRANCE S.A.
13 Boulevard Ney, 75018 Paris, France
KENWOOD ELECTRONICS ITALIA S.p.A.
Via G. Sirtori, 7/9 20129 Milano, Italy
KENWOOD ESPAÑA S.A.
Bolivia, 239-08020 Barcelona, Spain
KENWOOD ELECTRONICS AUSTRALIA PTY. LTD. (A.C.N. 001 499 074)
P.O. BOX 504, 8 Figtreel Drive, Australia Centre, Homebush, N.S.W. 2140, Australia
KENWOOD & LEE ELECTRONICS, LTD.
Unit 3712-3724, Level 37 Tower 1, Metroplaza, 223 Hing Fong Road, Kwai Fong N.T. Hong Kong
KENWOOD ELECTRONICS SINGAPORE PTE LTD.
No. 1 Genting Lane #07-00, KENWOOD Building, Singapore, 1334