EXPLODED VIEW (MECHANISM)

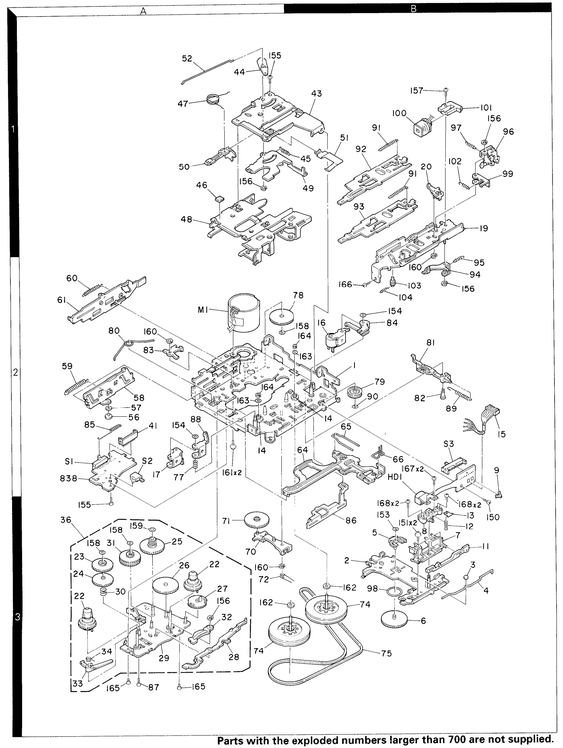

Parts with the exploded numbers larger than 700 are not supplied.

EXPLODED VIEW (UNIT)

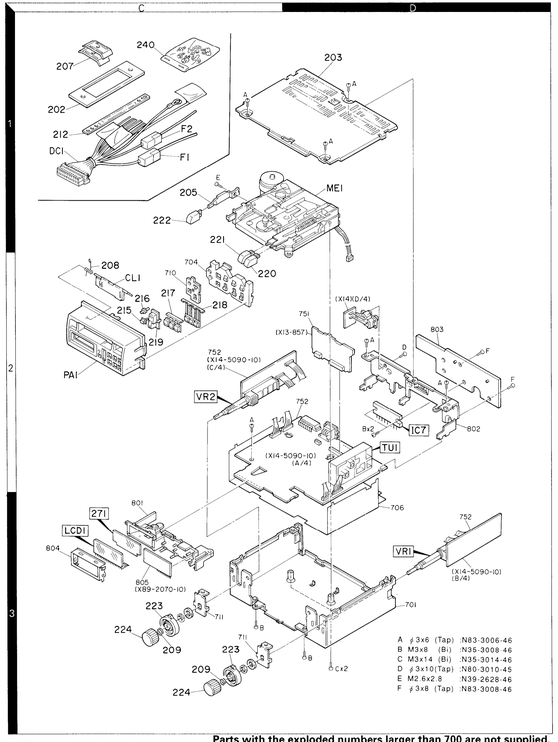

Parts with the exploded numbers larger than 700 are not supplied.

PARTS LIST

× New Parts
Parts without **Parts No.** are not supplied.
Les articles non mentionnes dans le **Parts No.** ne sont pas fournis.
Teile ohne **Parts No.** werden nicht geliefert.

Ref No. 参照番号	New 新	Parts No. 部品番号	Description 部品名／規格
		KRC-3006	
202 1C	×	A21-2323-02	DRESSING PANEL
203 1D	×	A52-0665-02	TOP COVER
CL1 2C	×	A53-1580-03	CASSETTE LID
PA1 2C	×	A64-0173-01	PANEL
-		B46-0100-20	WARRANTY CARD
-		B46-0172-03	QUESTIONAIRE CARD
-		B58-1213-04	CAUTION CARD (EIA)
-	×	B58-1223-04	CAUTION CARD (CD-CH)
-	×	B64-0354-00	INSTRUCTION MANUAL
205 1C		D10-2745-04	LEVER
ME1 1D	×	D40-1050-05	CASSETTE MECHANISM ASSY
⚠ DC1 1C	×	E30-4119-05	DC CORD ASSY (CRITICAL PARTS)
207 1C		F39-0042-04	REINFORCING PLATE
F1 1C		F06-3026-05	FUSE (3A)
F2 1C		F05-7521-05	FUSE (7.5A)
208 2C		G01-2525-04	TORSION COIL SPRING (CL1)
209 3C		G01-2609-14	TORSION COIL SPRING (KNOB)
-	×	H10-4452-02	POLYSTYRENE FOAMED FIXTURE
-		H25-0329-04	PROTECTION BAG (280X450XO.03)
-		H25-0332-04	PROTECTION BAG (80X230XO.03)
-		H25-0337-04	PROTECTION BAG (180X300XO.03)
-	×	H54-0109-04	ITEM CARTON CASE
-	×	H64-0123-04	OUTER CARTON CASE
212 1C		J54-0071-04	STAY
215 2C	×	K24-1420-04	KNOB (DISP)
216 2C	×	K24-1421-04	KNOB (RESET)
217 2C	×	K25-0633-03	KNOB (1,2,3)
218 2C	×	K25-0634-03	KNOB (4,5,6)
219 2C	×	K25-0635-03	KNOB (CD-CH)
220 2C	×	K27-3533-04	KNOB (BUTTON) (FF)
221 2C	×	K27-3534-04	KNOB (BUTTON) (REW)
222 2C	×	K27-3535-04	KNOB (BUTTON) (EJECT)
223 3C		K29-5563-04	KNOB (FAD)
224 3C		K29-5564-04	KNOB (VOL)
240 1C	×	N99-1608-05	SCREW SET
A 1D		N83-3006-46	PAN HEAD TAPTITE SCREW
B 2D		N35-3008-46	BINDING HEAD MACHINE SCREW
C 3D		N35-3014-46	BINDING HEAD MACHINE SCREW
D 2D		N80-3010-46	PAN HEAD TAPTITE SCREW
E 1C		N39-2628-46	PAN HEAD MACHIN SCREW
		SUB-CIRCUIT UNIT (X13-8570-10)	
C1		CK73EB1H183K	CHIP C 0.018UF K
C2		CK73FB1H183KTA	CHIP C 0.018UF K
C3 -7		CE04W1H010M	ELECTRO 1.0UF 50WV
C8 ,9		C93-0025-05	CERAMIC 0.22UF K
C10		CE04W1A220M	ELECTRO 22UF 10WV
C11 ,12		CE04W1H010M	ELECTRO 1.0UF 50WV
C13		CE04W1A101M	ELECTRO 100UF 10WV
C15 ,16		CE04W1A101M	ELECTRO 100UF 10WV

PARTS LIST

Ref No. 参照番号	New 新	Parts No. 部品番号	Description 部品名／規格
C17		CK73FB1H103K	CHIP C 0.010UF K
C19 ,20		CC73FCH1H150J	CHIP C 15PF J
CN1	×	E40-9330-05	SOCKET FOR PIN ASSY
CN2	×	E40-9329-05	SOCKET FOR PIN ASSY
TP1		E40-9218-05	PIN ASSY
R1 ,2		RK73FB2A392J	CHIP R 3.9K J 1/10W
R3 ,4		RK73FB2A104J	CHIP R 100K J 1/10W
R5 ,6		RK73EB2B822J	CHIP R 8.2K J 1/8W
R7 ,8		RK73FB2A562J	CHIP R 5.6K J 1/10W
R9		RK73FB2A183J	CHIP R 18K J 1/10W
R11		RK73FB2A102J	CHIP R 1.0K J 1/10W
R12		RK73EB2B102J	CHIP R 1.0K J 1/8W
R15		RK73FB2A102J	CHIP R 1.0K J 1/10W
R17 ,18		RK73FB2A473J	CHIP R 47K J 1/10W
R19 ,20		RK73FB2A363J	CHIP R 36K J 1/10W
R23		RK73FB2A472J	CHIP R 4.7K J 1/10W
R24		RK73FB2A223J	CHIP R 22K J 1/10W
R27 ,28		RK73FB2A681J	CHIP R 680 J 1/10W
R29 ,30		RK73FB2A473J	CHIP R 47K J 1/10W
R31 ,32		RK73FB2A363J	CHIP R 36K J 1/10W
R33 ,34		RK73FB2A332J	CHIP R 3.3K J 1/10W
R36		RK73FB2A470J	CHIP R 47 J 1/10W
R39 ,40		RK73FB2A472J	CHIP R 4.7K J 1/10W
VR1 ,2		R12-3100-05	TRIMMING POT.(10K)
W11 -13		R92-2052-05	CHIP R 0 D 1/10W
IC1		HA12134AF	IC(DOLBY B NR SYSTEM)
IC2		TC40666F	IC(BILATERAL SWITCH)
IC3		NJM4565MD	IC(OP AMP X2)
Q1 ,2		DTC143TK	DIGITAL TRANSISTOR
Q3 ,4		DTC144EK	DIGITAL TRANSISTOR
		SYNTHESIZER UNIT (X14-5090-10)	
271 3C	×	B11-0865-04	OPTICAL DIFFUSER
LCD1 3C	×	B38-0595-05	LIQUID CRYSTAL
PL1	×	B30-1418-05	LAMP (5.5V 125MA,GR)
C1 ,2		CK73FB1H102K	CHIP C 1000PF K
C3 ,4		CE04CW1V4R7M	ELECTRO 4.7UF 35WV
C5 ,6		CC73FCH1H101J	CHIP C 100PF J
C7 ,8		CK73FB1H223KTA	CHIP C 0.022UF K
C9 ,10		CE04CW1A101M	ELECTRO 100UF 10WV
C11 ,12		C90-2597-05	ELECTRO 10UF 16WV
C13		CK73EB1H683K	CHIP C 0.068UF K
C14		CC73FCH1H050C	CHIP C 5PF C
C15		CK73EB1E104K	CHIP C 0.10UF K
C16		CE04W1A101M	ELECTRO 100UF 10WV
C17		CE04CW1A101M	ELECTRO 100UF 10WV
C18		CK73FB1H103K	CHIP C 0.010UF K
C19 ,20		C90-2600-05	ELECTRO 2.2UF 35WV
C21 ,22		CK73FB1H223KTA	CHIP C 0.022UF K
C23 ,24		CC73FCH1H050C	CHIP C 5PF C
C25 ,26		CK73FB1H182K	CHIP C 1800PF K
C27		CE04CW1A101M	ELECTRO 100UF 10WV
C28		CE04CW0J331M	ELECTRO 330UF 6.3WV
C29 ,30		C90-2600-05	ELECTRO 2.2UF 35WV
C31		CK73EB1H473K	CHIP C 0.047UF K

E: Europe W: Without Europe P: Canada X: Australia
K: U.S.A. and Canada M: Without Europe, U.S.A. and Canada

⚠ indicates safety critical components.

PARTS LIST

SYNTHESIZER UNIT (X14-5090-10)

Ref No. 参照番号	New 新	Parts No. 部品番号	Description 部品名／規格
C32		CK73EB1H153K	CHIP C 0.015UF K
C33		CE04CW1C220M	ELECTRO 22UF 16WV
C36		CE04CW1A470M	ELECTRO 47UF 10WV
C37		CK73FB1H102K	CHIP C 1000PF K
C38 -40		CK73FB1H103K	CHIP C 0.010UF K
C41		C90-2608-05	ELECTRO 1.0UF 50WV
C42		CK73FB1H103K	CHIP C 0.010UF K
C43		CK73FB1H102K	CHIP C 1000PF K
C44		CC73FCH1H151J	CHIP C 150PF J
C45		CK73FB1H103K	CHIP C 0.010UF K
C47		CK73FB1H103K	CHIP C 0.010UF K
C48		CE04CW1V4R7M	ELECTRO 4.7UF 35WV
C50		C90-2606-05	ELECTRO 0.47UF 50WV
C51		C90-2608-05	ELECTRO 1.0UF 50WV
C52		CE04DW1A101M	ELECTRO 100UF 10WV
C53		C90-2597-05	ELECTRO 10UF 16WV
C54		CE04CW1V4R7M	ELECTRO 4.7UF 35WV
C55		CE04CW1H3R3M	ELECTRO 3.3UF 50WV
C56		C90-2608-05	ELECTRO 1.0UF 50WV
C57		C91-2033-05	PLASTIC FILM CAPACITOR
C58 ,59		CK73FB1H103K	CHIP C 0.010UF K
C61 ,62		CC73FB1E223KTA	CHIP C 0.022UF K
C63 ,64		CK73FB1H152K	CHIP C 1500PF K
C66		CK73FB1H223KTA	CHIP C 0.022UF K
C67		CK73FB1H103K	CHIP C 0.010UF K
C68		CK73FB1H223KTA	CHIP C 0.022UF K
C70		CK73FB1H223KTA	CHIP C 0.022UF K
C71		CE04DW1C222M	ELECTRO 2200UF 16WV
C72		C90-2597-05	ELECTRO 10UF 16WV
C73		CE04DW1C222M	ELECTRO 2200UF 16WV
C74		CE04CW1V4R7M	ELECTRO 4.7UF 35WV
C75		C90-2608-05	ELECTRO 1.0UF 50WV
C76 ,77		CE04CW1A221M	ELECTRO 220UF 10WV
C78		CK73FB1H223KTA	CHIP C 0.022UF K
C79		CE04CW1V4R7M	ELECTRO 4.7UF 35WV
C80		CE04CW0J470M	ELECTRO 47UF 6.3WV
C82		CK73EB1E104K	CHIP C 0.10UF K
C83		CF92V1H394J	MF 0.39UF J
C84		CE04CW1A221M	ELECTRO 220UF 10WV
C85 ,86		CC73FCH1H220J	CHIP C 22PF J
C87		CK73EB1E104K	CHIP C 0.10UF K
C88		CK73FB1H223KTA	CHIP C 0.022UF K
C89		CE04CW0J470M	ELECTRO 47UF 6.3WV
C90		C93-0025-05	CERAMIC 0.22UF K
C91 ,92		CE04DW1H282M	ELECTRO 2.2UF 50WV
C93 ,94		CK73EB1H102K	CHIP C 1000PF K
C99 -102		CF92V1H104J	MF 0.10UF J
C103		CK73FB1H103K	CHIP C 0.010UF K
C104		CE04DW1A221M	ELECTRO 220UF 10WV
C105,106		CE04DW1A220M	ELECTRO 22UF 10WV
C108,109		CK73EB1E104K	CHIP C 0.10UF K
C110		CE04CW1A470M	ELECTRO 47UF 10WV
C111,112		CE04DW1H081M	ELECTRO 0.1UF 50WV
C113,114		C90-2608-05	ELECTRO 1.0UF 50WV
C115,116		CC73FCH1H151J	CHIP C 150PF J
C117		CE04CW0J221M	ELECTRO 220UF 6.3WV
C118		CE04DW1A470M	ELECTRO 47UF 10WV
C119,120		C90-2597-05	ELECTRO 10UF 16WV
C121		CK73FB1H223KTA	CHIP C 0.022UF K
CN1		E40-3302-05	PIN ASSY
CN2	×	E40-9328-05	PIN ASSY
CN4	×	E58-0824-05	RECTANGULAR RECEPTACLE
CN5	×	E40-9327-05	PIN ASSY
J1	×	E04-0306-05	RF COAXIAL CABLE RECEPTACLE
J2	×	E63-0822-05	PHONO JACK
J3		E06-1301-05	CYLINDRICAL RECEPTACLE
TP1 ,2		E40-3604-05	PIN ASSY
WH1	×	E39-0044-05	WIRING HARNESS
WH2	×	E39-0043-05	WIRING HARNESS
WH3	×	E39-0046-05	WIRING HARNESS
WH4 ,5	×	E39-0043-05	WIRING HARNESS
WH6	×	E39-0045-05	WIRING HARNESS
LH1 ,2		J19-4316-05	HOLDER
CF1 ,2		L72-0715-05	CERAMIC FILTER
L1		L40-4791-17	SMALL FIXED INDUCTOR(4.7UH,K)
L2		L40-1001-14	SMALL FIXED INDUCTOR(10UH,K)
T1		L30-0462-15	FM IFT
X1		L77-2025-05	CRYSTAL RESONATOR
A 2D		N83-3006-46	PAN HEAD TAPTITE SCREW
B 2D		N35-3008-46	BINDING HEAD MACHINE SCREW
F 2D		N83-3008-46	PAN HEAD TAPTITE SCREW
R1 ,2		RK73FB2A823J	CHIP R 82K J 1/10W
R3 ,4		RK73FB2A101J	CHIP R 100 J 1/10W
R5 ,6		RK73FB2A682J	CHIP R 6.8K J 1/10W
R7 ,8		RK73FB2A124J	CHIP R 120K J 1/10W
R9 ,10		RK73FB2A224J	CHIP R 220K J 1/10W
R11 ,12		RK73FB2A103J	CHIP R 10K J 1/10W
R13 ,14		RK73FB2A333J	CHIP R 33K J 1/10W
R16		RK73FB2A101J	CHIP R 100 J 1/10W
R19		RK73EB2A473J	CHIP R 47K J 1/8W
R20		RK73FB2A473J	CHIP R 47K J 1/10W
R23		RK73FB2A684J	CHIP R 680K J 1/10W
R24		RK73EB2B222J	CHIP R 2.2K J 1/8W
R25		RK73FB2A242J	CHIP R 2.4K J 1/10W
R26		RK73EB2B101J	CHIP R 100 J 1/8W
R31 ,32		RK73FB2A103J	CHIP R 10K J 1/10W
R33 ,34		RK73FB2A333J	CHIP R 33K J 1/10W
R41 ,42		RK73FB2A332J	CHIP R 3.3K J 1/10W
R43 ,44		RK73FB2A152J	CHIP R 1.5K J 1/10W
R47 ,48		RK73FB2A472J	CHIP R 4.7K J 1/10W
R49		RK73FB2A104J	CHIP R 100K J 1/10W
R51		RK73FB2A223J	CHIP R 22K J 1/10W
R52		RK73FB2A562J	CHIP R 5.6K J 1/10W
R53		RK73FB2A472J	CHIP R 4.7K J 1/10W
R54		RK73FB2A447J	CHIP R 4.7 J 1/10W
R55		RK73FB2A101J	CHIP R 100 J 1/10W
R56		RK73FB2A331J	CHIP R 330 J 1/10W
R57		RK73FB2A332J	CHIP R 3.3K J 1/10W

E: Europe W: Without Europe P: Canada X: Australia
K: U.S.A. and Canada M: Without Europe, U.S.A. and Canada

⚠ indicates safety critical components.