Model 2

Friday, 3 April 2026 13:04

3 seperate components :

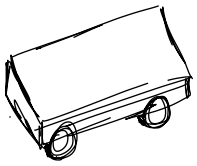

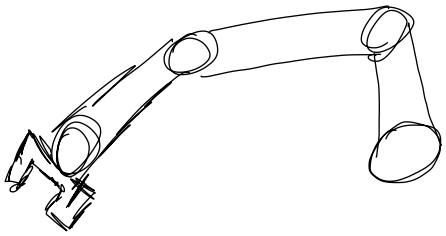

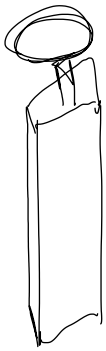

1. Base :

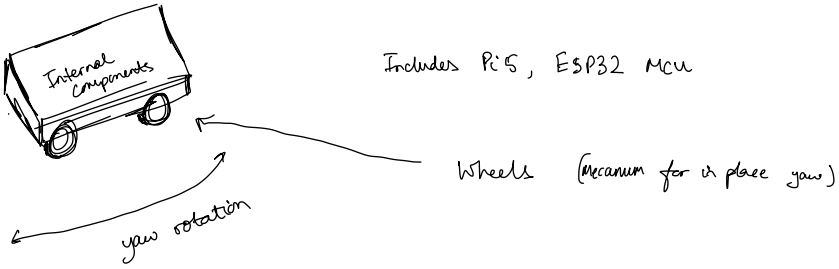

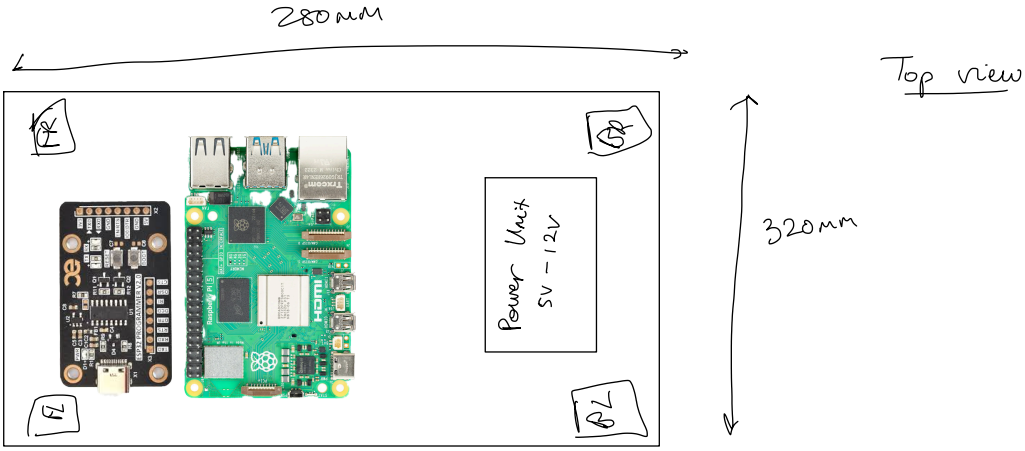

Side on :

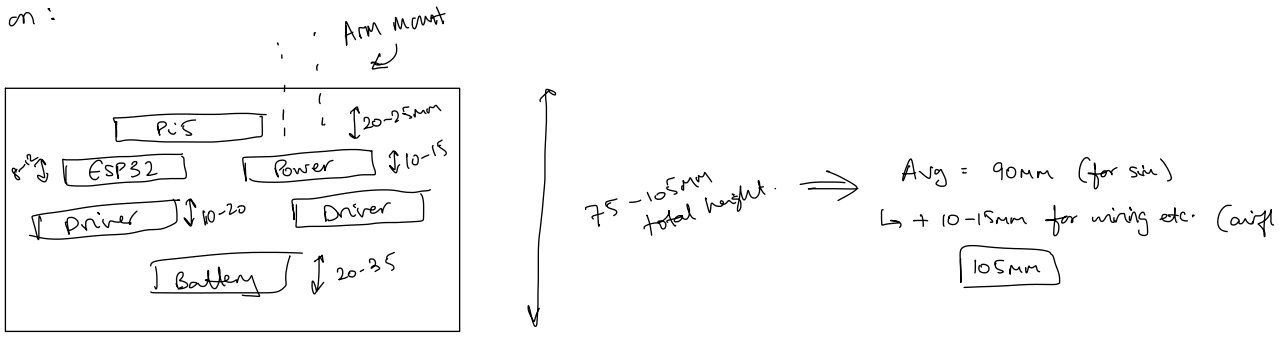

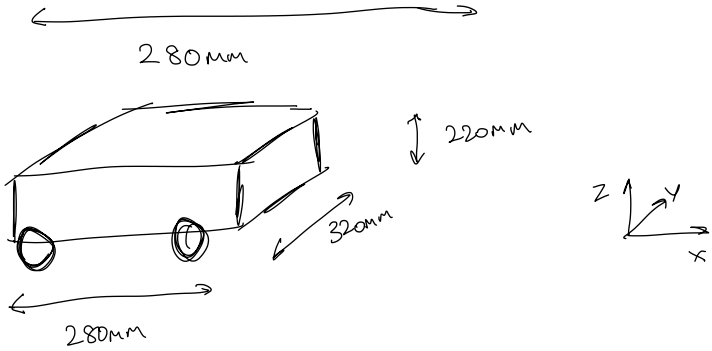

Weights:

LiPo ≃ 0.5 to 0.8 kg

Power board + Neg ≃ 0.05 – 0.15 kg

4x Motor drivers ≃ 0.1 – 0.2 kg

Pi 5 + ESP32 ≃ 0.05 + 0.01 kg ≃ 0.06 kg

Aluminium / Printed parts ≃ 0.8 – 1.5 kg

Motors + wheels (4x mecanum) ≃ 1.2 – 2 kg

Arm (0.8 – 1.5 kg)

Total ≃ 3.5 to 6 kg

Base mass ≃ 3.5 kg

$$z_{COM} \simeq \frac{\sum_i m_i z_i}{\sum m_i} = 0.055\,m$$

$x_{COM} = 0$

$y_{COM} \simeq 0$

$(0, 0, 0.055)$

$I_{xx} = 0.06$ $I_{yy} = 0.07$ $I_{zz} = 0.09$

$I_{xy} = 0$ $I_{yz} = 0$

$I_{xz} = 0$

---

2. Arm

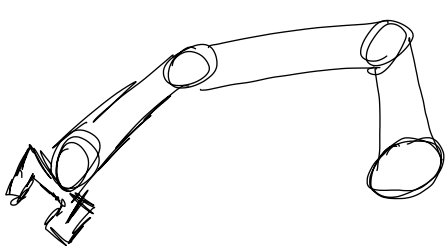

3 link pitch planar arm
With a ball & socket joint
for gripper

3)

LiDAR mount.
Fixed, no rpy
LiDAR is higher (z-coord).

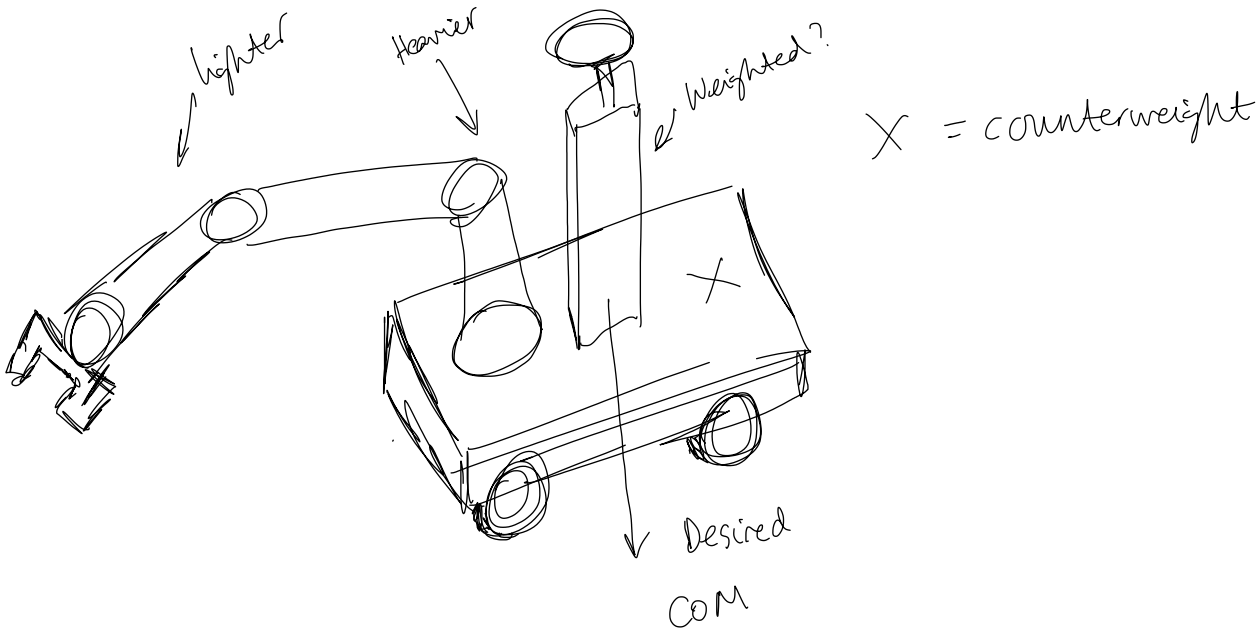
lighter
Heavier
Weighted?
X = counterweight
X
Desired
COM