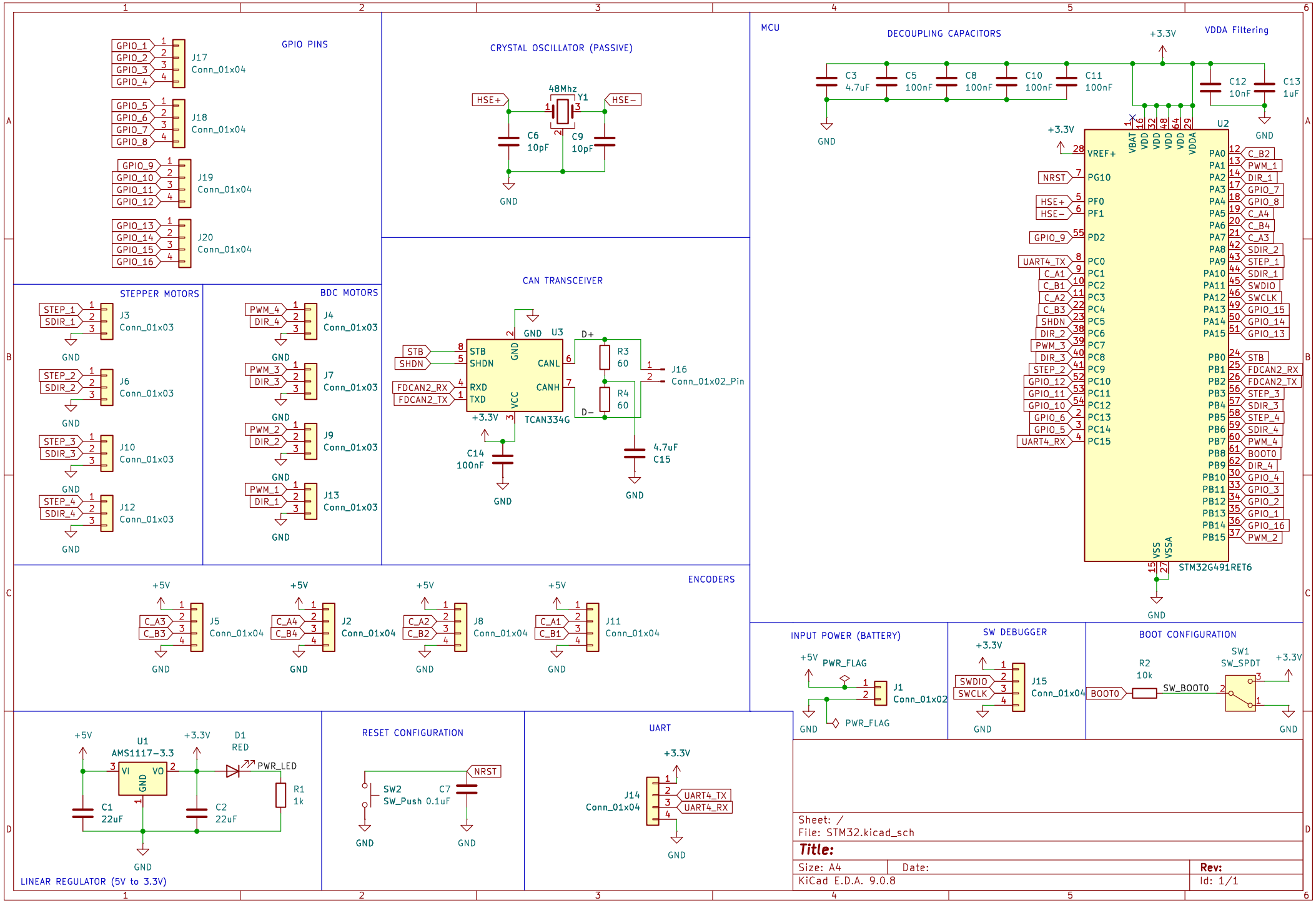
GPIO PINS
J17 Conn_01x04
J18 Conn_01x04
J19 Conn_01x04
J20 Conn_01x04
CRYSTAL OSCILLATOR (PASSIVE)
48Mhz
Y1
HSE+
HSE−
C6 10pF
C9 10pF
GND
MCU
DECOUPLING CAPACITORS
C3 4.7uF
C5 100nF
C8 100nF
C10 100nF
C11 100nF
+3.3V
VDDA Filtering
C12 10nF
C13 1uF
U2
STM32G491RET6
STEPPER MOTORS
J3 Conn_01x03
J6 Conn_01x03
J10 Conn_01x03
J12 Conn_01x03
BDC MOTORS
J4 Conn_01x03
J7 Conn_01x03
J9 Conn_01x03
J13 Conn_01x03
CAN TRANSCEIVER
U3
TCAN334G
STB
SHDN
FDCAN2_RX
FDCAN2_TX
R3 60
R4 60
J16 Conn_01x02_Pin
C14 100nF
C15 4.7uF
ENCODERS
J5 Conn_01x04
J2 Conn_01x04
J8 Conn_01x04
J11 Conn_01x04
INPUT POWER (BATTERY)
PWR_FLAG
J1 Conn_01x02
SW DEBUGGER
J15 Conn_01x04
SWDIO
SWCLK
BOOT CONFIGURATION
R2 10k
SW1 SW_SPDT
BOOT0
SW_BOOT0
LINEAR REGULATOR (5V to 3.3V)
U1 AMS1117-3.3
D1 RED
PWR_LED
R1 1k
C1 22uF
C2 22uF
RESET CONFIGURATION
SW2 SW_Push
C7 0.1uF
NRST
UART
J14 Conn_01x04
UART4_TX
UART4_RX
Sheet: /
File: STM32.kicad_sch
Title:
Size: A4
Date:
Rev:
KiCad E.D.A. 9.0.8
Id: 1/1