Free Standard provided by BIS via BSB Edge Private Limited to Akshay Chaudhary - Chennai(akshay.chdary@gmail.com) 136.238.2.51 [for non-commercial use only].

भारतीय मानक
Indian Standard

IS 17900 (Part 1) : 2022

[*Superseding* IS 14665 (Part 1) : 2000,
IS 14665 (Part 2/Sec 1) : 2000,
IS 14665 (Part 3/Sec 1) : 2000,
IS 14665 (Part 4/Sec 1 to 9) : 2001,
IS 14671 : 1999, IS 15785 : 2007]

यात्री एवम सामान के परिवहन के लिए लिफ्ट्स

भाग 1 सुरक्षा नियम

Lifts for the Transport of Persons and Goods

Part 1 Safety Rules

ICS 91.140.90

© BIS 2022

भारतीय मानक ब्यूरो
BUREAU OF INDIAN STANDARDS
मानक भवन, 9 बहादुरशाह ज़फर मार्ग, नई दिल्ली – 110002
MANAK BHAVAN, 9 BAHADUR SHAH ZAFAR MARG
NEW DELHI-110002
www.bis.gov.in www.standardsbis.in

December 2022 **Price Group 20**

Free Standard provided by BIS via BSB Edge Private Limited to Akshay Chaudhary - Chennai(akshay.chdary@gmail.com) 136.238.2.51 [for non-commercial use only].

Lifts, Escalators and Moving Walks Sectional Committee, ETD 25

FOREWORD

This Indian Standard (Part 1) was adopted by the Bureau of Indian Standards, after the draft finalized by the Lifts, Escalators and Moving Walks Sectional Committee had been approved by the Electrotechnical Division Council.

The requirements for traction lifts were earlier covered in IS 14665 (Parts 1 to 4) which were published in the years 2000 and 2001. IS 14671 published in 1999 provided the 'Code of practice for installation and maintenance of hydraulic lift' and IS 15785 published in 2007 provided the 'Code of practice for installation and maintenance of lift without conventional machine rooms'.

This Part and Part 2 of this series of standards supersedes IS 14665 (Part 1), IS 14665 (Part 2/Sec 1), IS 14665 (Part 3/Sec 1), IS 14665 (Part 4/Sec 1 to 9), IS 14671 and IS 15785.

This Indian Standard is a part of series of Indian Standards on 'Lifts for the transport of persons and goods'. Other parts of this series of standards cover various requirements like specifications for control devices, buttons, signals, indicators, and other fittings; specifications for planning and selection, guide for inspection and maintenance of lifts, lifts for special applications, dumbwaiters etc. Other parts of this series are under development.

This standard is to be read in conjunction with IS 17900 (Part 2) : 2022.

This standard and its part 2 introduces the following major changes to the existing standards that will bring more safety to the passengers, service engineers, and public in general, in connection with the use of lifts and lift installations:

a) Safety improvements related to passengers:
   1) Requirements related to Unintended Car Movement (UCM) added,
   2) Pendulum tests for testing car door, landing door, landing/car door locking device, and car wall strength added,
   3) Fire classification for lift car materials and car emergency light requirements added. etc.
b) Safety improvements for service engineers:
   1) Shaft lighting and car roof lighting requirements added,
   2) Requirements with respect to access pit and machine room and control station location added/modified,
   3) Car roof and pit refuge spaces requirements modified,
   4) Requirements for protection of sheaves and pulleys modified. etc.
c) Changes affecting building design:
   1) Requirements with respect to lamination of glass enhanced,
   2) Shaft walls withstand strength enhanced,
   3) Shaft ventilation and fire-extinguisher location aspects have also been addressed etc.

This standard is largely based on ISO 8100-1 : 2019 'Lifts for the transport of persons and goods — Part 1: Safety rules for the construction and installation of passenger and goods passenger lifts'. In order to suit the Indian market requirements and considering provisions of enhanced safety, changes have been made in the standard ISO 8100-1. However, the structure of ISO 8100-1 : 2019 has been retained. Clauses from ISO 8100-1 which have not been accepted as part of this standard have been indicated as "Not Used" keeping the clause numbering same as the original ISO 8100-1. Clauses with major modifications/additions/deletions can be identified with a vertical line placed against them.

Main changes with regard to the ISO 8100-1 include:

a) Terminology changed from "goods passenger lifts" to "goods lifts" in line with the terminology accepted in India.
b) The average weight of a person has been determined to be 68 kg in the standard in line with the Indian market requirement. Number of passenger formula, therefore, has been updated as per average person weight 68 kg.

(*Continued on third cover*)

Free Standard provided by BIS via BSB Edge Private Limited to Akshay Chaudhary - Chennai(akshay.chdary@gmail.com) 136.238.2.51 [for non-commercial use only].

CONTENTS

Page No.

0	INTRODUCTION	...	v
0.1	General	...	v
0.2	General Remarks	...	v
0.3	Principles	...	v
0.4	Assumptions	...	v
1	SCOPE	...	1
2	REFERENCES	...	1
3	TERMINOLOGY	...	3
4	LIST OF SIGNIFICANT HAZARDS	...	5
5	SAFETY REQUIREMENTS AND/OR PROTECTIVE MEASURES	...	7
5.1	General	...	7
5.2	Well, Machinery Spaces and Pulley Rooms	...	7
5.3	Landing Doors and Car Doors	...	24
5.4	Car, Counterweight and Balancing Weight	...	35
5.5	Suspension Means, Compensation Means and Related Protection Means	...	43
5.6	Precautions against Free Fall, Excessive Speed, Unintended Car Movement and Creeping of the Car	...	46
5.7	Guide Rails	...	55
5.8	Buffers	...	58
5.9	Lift Machinery and Associated Equipment	...	59
6	VERIFICATION OF THE SAFETY REQUIREMENTS AND/OR PROTECTIVE MEASURES	...	84
6.1	Technical Compliance Documentation	...	84
6.2	Verification of Design	...	85
6.3	Examinations and Tests before Putting Into Service	...	85
7	INFORMATION FOR USE	...	90
7.1	General	...	90
7.2	Instruction Manual	...	90
7.3	Logbook	...	91
ANNEX A	LIST OF THE ELECTRIC SAFETY DEVICES	...	92
ANNEX B	TECHNICAL COMPLIANCE DOCUMENTATION	...	93
ANNEX C	PERIODIC EXAMINATIONS AND TESTS, EXAMINATIONS AND TESTS AFTER AN IMPORTANT MODIFICATION OR AFTER AN ACCIDENT	...	94

Free Standard provided by BIS via BSB Edge Private Limited to Akshay Chaudhary - Chennai(akshay.chdary@gmail.com) 136.238.2.51 [for non-commercial use only].

Page No.

C-1 PERIODIC EXAMINATIONS AND TESTS ... 94

C-2 EXAMINATIONS AND TESTS AFTER AN IMPORTANT MODIFICATION OR AFTER AN ACCIDENT ... 94

ANNEX D MACHINERY SPACES — ACCESS ... 95

ANNEX E BUILDING INTERFACES ... 96

E-1 GENERAL PROVISIONS ... 96

E-2 SUPPORT OF GUIDE RAILS ... 96

E-3 VENTILATION OF CAR, WELL AND MACHINE ROOMS ... 96

E-3.1 General ... 96
E-3.2 Ventilation of the Well and Car ... 96
E-3.3 Ventilation of Machine Rooms ... 97

ANNEX F PIT ACCESS LADDER ... 97

F-1 TYPES OF PIT ACCESS LADDER ... 97

F-2 GENERAL PROVISIONS ... 98

F-3 LADDER UPRIGHTS AND RUNGS ... 98

F-3.1 Ladder Uprights ... 98
F-3.2 Ladder Rungs ... 98

F-4 SPECIFIC PROVISIONS FOR NON-FIXED TYPE LADDERS ... 98

F-5 LOCATION OF THE LADDER IN THE PIT ... 98

ANNEX G RELATIONSHIP BETWEEN THIS STANDARD AND ISO 8100-20 ... 100

ANNEX H ELASTOMERIC COATED STEEL BELTS FOR LIFTS ... 100

H-1 REQUIREMENTS ... 100

H-2 TERMS ... 100

H-2.1 Description of Terms ... 100
H-2.2 Belt Grade ... 100

H-3 DIMENSIONAL CHARACTERISTICS ... 100

H-3.1 For the Steel Chords ... 100
H-3.2 Mechanical Properties ... 100

H-4 MATERIAL ... 101

H-5 CSB PROPERTIES AND TOLERANCES ... 101

H-5.1 Classification ... 101
H-5.2 Chord Core ... 101

Free Standard provided by BIS via BSB Edge Private Limited to Akshay Chaudhary - Chennai(akshay.chdary@gmail.com) 136.238.2.51 [for non-commercial use only].

Page No.

H-5.3 CSB Grade ... 101
H-5.4 Chord Lay ... 101
H-5.5 CSB Mass ... 101
H-5.6 Belt Length ... 101

H-6 TESTING AND COMPLIANCE ... 101

H-6.1 General ... 101

H-7 LIFT CYCLE ... 101

H-7.1 Replacement Due to Damage ... 101
H-7.2 Replacement Due to Wear ... 102

ANNEX J COMMITTEE COMPOSITION ... 103

LIST OF FIGURES

Fig. 1 Partially Enclosed Well ... 13
Fig. 2 Partially Enclosed Well — Distances ... 14
Fig. 3 Clearances Between Car and Wall Facing the Car Entrance ... 14
Fig. 4 Maximum Dimensions of a Reduction in the Refuge Space ... 17
Fig. 5 Minimum Distances Between Parts Fixed on Car Roof and Lowest Parts Fixed to Ceiling of Well ... 17
Fig. 6 Horizontal Distance Around Guide Rail ... 21
Fig. 7 Minimum Vertical Distances for Car Frame Parts, Safety Gear, Guide Shoes and Pawl Devices ... 21
Fig. 8 Hinged Landing Door and Folding Car Door ... 26
Fig. 9 Hinged Landing Door and Horizontal Sliding Car Door ... 26
Fig. 10 Horizontal Sliding Car and Landing Doors, Not Mechanically Coupled ... 26
Fig. 11 Door Panels — Pendulum Shock Tests — Striking Points ... 29
Fig. 12 Examples Of Locking Elements ... 32
Fig. 13 Unlocking Triangle ... 33
Fig. 13 A Available Car Area ... 35
Fig. 14 Pictogram At Landings for Loading by Handling Devices ... 37
Fig. 15 Example of Components Providing Protection from Falling (Electric Lifts) ... 41
Fig. 16 Example of Components Providing Protection from Falling (Hydraulic Lifts) ... 41
Fig. 17 Car Roof Balustrade — Height ... 42
Fig. 18 Example of Nip Guard ... 45
Fig. 19 Examples of Arrangements of Rope Retainers ... 46
Fig. 20 Unintended Car Movement — Downwards and Upwards Movement ... 54
Fig. 21 Diagram for Assessing Safety Circuits ... 74
Fig. 22 Inspection Control Station — Controls And Pictograms ... 78
Fig. 23 Bypass Pictogram ... 79
Fig. D-1 Machinery Spaces - Access (5.2.2) ... 95
Fig. F-1 Types of Pit Access Ladder ... 99

Free Standard provided by BIS via BSB Edge Private Limited to Akshay Chaudhary - Chennai(akshay.chdary@gmail.com) 136.238.2.51 [for non-commercial use only].

Page No.

LIST OF TABLES

Table 1	List of Significant Hazards	...	6
Table 2	Extreme Positions of Car, Counterweight and Balancing Weight	...	16
Table 3	Dimensions of Refuge Spaces in Headroom	...	18
Table 4	Dimensions of Refuge Spaces in the Pit	...	19
Table 5	Striking Points	...	28
Table 6	No. of Passengers, Rated Load, Minimum Available Car Area, and Maximum Available Car Area	...	36
Table 7	Rated Load and Maximum Available Car Area: Goods Lifts	...	37
Table 8	Number of Passengers and Minimum Car Available Area	...	38
Table 9	Flat Glass Panels to be Used in Walls of the Car	...	39
Table 10	Protection for Sheaves and Pulleys	...	45
Table 11	Protection Means for Traction and Positive Drive Lifts	...	46
Table 12	Protection Means for Hydraulic Lifts	...	47
Table 13	Loads and Forces to be Taken into Consideration in the Different Load Cases	...	57
Table 14	Impact Factors	...	57
Table 15	Safety Factors for Guide Rails	...	58
Table 16	Insulation Resistance	...	69
Table 17	Inspection Control Station — Button Designations	...	78
Table 17	A Terminal Limit Switch Requirements for Elevators	...	81
Table 18	Means of Verification of the Safety Requirements and/or Protective Measures	...	85
Table A-1	List of the Electric Safety Devices	...	92

Free Standard provided by BIS via BSB Edge Private Limited to Akshay Chaudhary - Chennai(akshay.chdary@gmail.com) 136.238.2.51 [for non-commercial use only].

0 INTRODUCTION

0.1 General

This Indian Standard is a type C standard as stated in IS 16819.

The machinery concerned and the extent to which hazards, hazardous situations and hazardous events are covered are indicated in the scope of this Standard.

When provisions of this type C standard are different from those which are stated in type A or B standards, the provisions of this type C standard take precedence over the provisions of the other standards, for machines that have been designed and built according to the provisions of this type C standard.

0.2 General Remarks

0.2.1 The objective of this Standard is to define safety rules related to passenger and goods lifts with a view to safeguarding persons and objects against the risk of accidents associated with the normal use, maintenance and emergency operation of lifts.

0.2.2 A study has been made of the various possible hazards with lifts, *see* **4**.

0.2.2.1 Persons to be safeguarded:

a) users, including passengers and competent and authorized persons, for example, maintenance and inspection personnel [*see* IS 17900 (Part 6)].

b) persons in the surrounding area of the well, or any machine room and pulley room, who can be affected by the lift.

0.2.2.2 Property to be safeguarded:

a) loads in car;

b) components of the lift installation;

c) building in which the lift is installed;

d) immediate surrounding area of the lift installation.

0.2.3 When the weight, size and/or shape of components prevent them from being moved by hand, they are:

a) either fitted with attachments for lifting gear;

b) designed so that they can be fitted with such attachments (for example, by means of threaded holes); or

c) shaped in such a way that standard lifting gear can easily be attached.

0.3 Principles

0.3.1 *General*

In drawing up this Indian Standard, the following principles have been used:

0.3.2 This standard does not repeat all the general technical rules applicable to every electrical, mechanical, or building construction including the protection of building elements against fire.

However, it is necessary to establish certain requirements for good construction, either because they are peculiar to lift manufacture or because, in the case of lift utilization, the requirements can be more stringent than elsewhere.

0.3.3 This standard states minimum rules for the installation of lifts into buildings/constructions.

There can be regulations for the construction of buildings which are to be complied to.

Typical clauses affected by this are those defining minimum values for the height of the machine and pulley rooms and for the dimensions of their access doors.

0.3.4 As far as possible, this standard sets out only the requirements that materials and equipment should meet in the interests of safe operation of lifts.

0.3.5 Risk analysis, terminology and technical solutions have been considered, taking into account the methods of IS 16819, ISO 14798 and the IS/IEC 61508 series of standards.

0.3.6 The average weight of a person has been determined to be 68 kg.

This standard defines the maximum car area related to a specified design load in the car (rated load) and the minimum car area to transport a corresponding number of persons, based on 68 kg per person, in order to detect and discourage overloading.

0.4 Assumptions

0.4.1 *General*

In drawing up this standard, the following assumptions have been made:

0.4.2 Negotiations have been made between the customer and the supplier, and an agreement was reached about:

a) the intended use of the lift;

b) the type and mass of the handling devices intended to be used to load and unload the car, in the case of goods lifts;

c) environmental conditions such as temperature, humidity, exposure to sun or wind, snow, corrosive atmosphere;

d) civil engineering problems (for example, building regulations);

Free Standard provided by BIS via BSB Edge Private Limited to Akshay Chaudhary - Chennai(akshay.chdary@gmail.com) 136.238.2.51 [for non-commercial use only].

e) other aspects related to the place of installation;

f) the dissipation of heat from the components/ equipment of the lift which would require ventilation of the well and/or the machinery space/location of equipment;

g) information about the aspects relating to noise and vibrations emitted by the equipment.

0.4.3 Relevant risks have been considered for each component that can be incorporated in a complete lift installation and rules have been drawn up accordingly. Components are:

a) designed in accordance with usual engineering practice (*see* ISO/TS 8100-21) and calculation codes, taking into account all failure modes;

b) of sound mechanical and electrical construction;

c) made of materials with adequate strength and of suitable quality;

d) free of defects;

e) free from harmful materials, for example, asbestos.

0.4.4 Components are kept in good repair and working order, so that the required dimensions remain fulfilled despite wear. All lift components are considered as requiring inspection to ensure safe continued operation during use.

The operational clearances specified in the standard should be maintained not only during the examination and tests before the lift is put into service, but also throughout the life of the lift.

NOTE — Components not requiring maintenance (for example, maintenance free, sealed for life) are still required to be available for inspection.

0.4.5 Components are selected and installed so that foreseeable environmental influences and special working conditions do not affect the safe operation of the lift.

0.4.6 By design of the load bearing elements, safe normal operation of the lift is assured for loads ranging from 0 percent to 100 percent of the rated load, plus any designed overload capacity (*see* **5.12.1.2**).

0.4.7 The requirements in this standard are such that the possibility of a failure of an electric safety device (*see* **5.11.2**) or a type tested safety component complying with all the requirements of this document and part 2 of this series of standards [IS 17900 (Part 2)], does not need to be taken into consideration.

0.4.8 Users need to be safeguarded against their own negligence and unwitting carelessness when using the lift in the intended way.

0.4.9 A user can, in certain cases, make one imprudent act. The possibility of two simultaneous acts of imprudence and/or the abuse of instructions for use is not considered.

0.4.10 If in the course of maintenance work, a safety device normally not accessible to the users is deliberately neutralized, safe operation of the lift is no longer assured, but compensatory measures are taken to ensure users' safety, in conformity with maintenance instructions.

It is assumed that maintenance personnel are instructed and work according to the instructions.

0.4.11 Horizontal forces and/or energies to consider are indicated in the applicable clauses of this standard. Typically, where not otherwise specified in this standard, the energy exerted by a person results in an equivalent static force of:

a) 300 N;

b) 1 000 N where impact can occur.

0.4.12 With the exception of the items listed below which have been given special consideration, a mechanical device built according to good practice and the requirements of this standard (including uncontrolled slipping of the suspension means on the traction sheave) does not deteriorate to a point of creating hazard without the possibility of detection, provided that all of the instructions given by the manufacturer have been duly applied:

a) breakage of the suspension;

b) breakage and slackening of all linkage by auxiliary ropes and belts;

c) failure of one of the mechanical components of the electromechanical brake which take part in the application of the braking action on the drum or disk;

d) failure of a component associated with the main drive elements and the traction sheave;

e) rupture in the hydraulic system (jack excluded);

f) small leakage in the hydraulic system (jack included, *see* **6.3.10**).

0.4.13 The possibility of the safety gear not engaging should the car free fall from a stationary position, at the lowest landing before the car strikes the buffer(s), is considered acceptable.

0.4.14 When the speed of the car is linked to the electrical frequency of the mains, the speed is assumed not to exceed 115 percent of the rated speed or a corresponding lesser speed where specified in this standard for inspection control, levelling, etc.

0.4.15 Means of access are provided for the hoisting of heavy equipment [*see* **0.4.2 e)**].

Free Standard provided by BIS via BSB Edge Private Limited to Akshay Chaudhary - Chennai(akshay.chdary@gmail.com) 136.238.2.51 [for non-commercial use only].

0.4.16 To ensure the correct functioning of the equipment in the well and machinery space(s), that is, taking into account the heat dissipated by the equipment, the ambient temperature in the well and the machinery space(s) is to be maintained between +5°C and +40°C.

NOTE — *See* IS 732, Code AA5.

0.4.17 The well is suitably ventilated, according to national/state building regulation, taking into consideration the heat output as specified by the manufacturer, the environmental conditions of the lift and the limits given in **0.4.16**, for example, ambient temperature, humidity, direct sunlight, air quality and air tightness of buildings due to energy saving requirements.

NOTE — *See* **0.4.2** and **E-3** for further guidance.

0.4.18 Access ways to the working areas are adequately lit (*see* **0.4.2**).

0.4.19 Minimum passageways, corridors, fire escapes, etc. are not obstructed by the open door/trap of the lift and/or any protection means for working areas outside of the well, where fitted according to the maintenance instructions (*see* **0.4.2**).

0.4.20 Where more than one person is working at the same time on a lift, an adequate means of communication between these persons is ensured.

0.4.21 The fixing system of guards, used specifically to provide protection against mechanical, electrical or any other hazards by means of a physical barrier, which need to be removed during regular maintenance and inspection, remains attached to the guard or to the equipment when the guard is removed.

0.4.22 The fluids used for the operation of hydraulic lifts are according to IS 11159 (Part 5).

Free Standard provided by BIS via BSB Edge Private Limited to Akshay Chaudhary - Chennai(akshay.chdary@gmail.com) 136.238.2.51 [for non-commercial use only].

Free Standard provided by BIS via BSB Edge Private Limited to Akshay Chaudhary - Chennai(akshay.chdary@gmail.com) 136.238.2.51 [for non-commercial use only].

Indian Standard

LIFTS FOR THE TRANSPORT OF PERSONS AND GOODS

PART 1 SAFETY RULES

1 SCOPE

1.1 This Indian Standard (Part 1) specifies the safety rules for new passenger or goods lifts, with traction, positive or hydraulic drive, serving defined landing levels, having a car designed for the transportation of persons or persons and goods, suspended by ropes/ coated steel belts (CSBs) or jacks and moving between guide rails inclined not more than 15° to the vertical.

1.2 In addition to the requirements of this standard, supplementary requirements need to be considered in special cases (use of lifts by persons with disabilities, in case of fire, potentially explosive atmosphere, extreme climate conditions, seismic conditions, transporting dangerous goods, etc.).

1.3 This standard does not cover:

a) new passenger or goods lifts in existing buildings (*see* Note below) where, in some circumstances due to limitations enforced by building constraints, some requirements of this standard cannot be met, for example, IS 17386.

NOTE — An existing building is a building which is used or was already used before the order for the lift was placed. A building whose internal structure is completely renewed is considered a new building.

b) lifting appliances, such as paternosters, mine lifts, theatrical lifts, appliances with automatic caging, skips, lifts and hoists for building and public works sites, ships' hoists, platforms for exploration or drilling at sea, construction and maintenance appliances or lifts in wind turbines;

c) important modifications (*see* **Annex C**) to a lift installed before this standard is brought into application;

d) safety during operations of transport, erection, repairs, and dismantling of lifts. However, this standard can usefully be taken as a basis.

Noise and vibrations are not dealt with in this standard as they are not found at levels which could be considered harmful with regard to the safe use and maintenance of the lift (*see also* **0.4.2**).

1.4 This clause number has not been used.

2 REFERENCES

The standards listed below contain provisions which, through reference in this text, constitute provisions of this standard. At the time of publication, the editions indicated were valid. All standards are subject to revision, and parties to agreements based on this standard are encouraged to investigate the possibility of applying the most recent editions of these standards.

IS No./ International Publication	*Title*
SP 7 : 2016	National Building Code of India
732 : 2019	Code of practice for electrical wiring installations (*fourth revision*)
800 : 2007	General construction in steel — Code of practice (*third revision*)
1293 : 2019	Plugs and socket-outlets for household and similar purposes of rated voltage up to and including 250 V and rated current up to and including 16 A — Specification (*fourth revision*)
3696 (Part 2) : 1991	Scaffolds and ladders — Code of safety: Part 2 Ladders
4289 (Part 2) : 2000	Flexible cables for lifts and other flexible connections — Specification: Part 2 PVC insulated circular cables
7513 (Part 1) : 2019	Fluid power systems and components — Graphical symbols and circuit diagrams: Part 1 Graphical symbols for conventional use and data-processing applications (*first revision*)
9158 : 1979	Specification for cold — Drawn high pressure fluid power cylinder tubes
11159 (Part 5) : 2019	Lubricants, industrial oils and related products (Class L) — Classification: Part 5 Family H (hydraulic systems) (*first revision*)
12032 series	Graphical symbols for diagrams in the field of electrotechnology
12777 : 1989	Method for classification of flame spread of products

Free Standard provided by BIS via BSB Edge Private Limited to Akshay Chaudhary - Chennai(akshay.chdary@gmail.com) 136.238.2.51 [for non-commercial use only].

IS No./ International Publication	*Title*
15382 (Part 1) : 2014	Insulation coordination for equipment within low — Voltage systems: Part 1 Principles, requirements and tests (*first revision*)
16451 : 2018	Graphical symbols — Safety colours and safety signs — Registered safety signs
16503 (Part 3) : 2017	Safety of machinery — Indication, marking and actuation: Part 3 Requirements for the location and operation of actuators
16504 (Part 1) : 2019	Safety of machinery — Electrical equipment of machines: Part 1 General requirements (*first revision*)
16809 (Part 2) : 2018	Safety of machinery — Permanent means of access to machinery: Part 2 Working platforms and walkways
16814 : 2018	Safety of machinery — Safety distances to prevent hazard zones being reached by upper and lower limbs
16819 : 2018	Safety of machinery — General principles for design — Risk assessment and risk reduction
17064 (Part 1) : 2018	Electromechanical elementary relays: Part 1 General and safety requirements
17064 (Part 3) : 2020	Electromechanical elementary relays: Part 3 Relays with forcibly guided (mechanically linked) contacts
17386 : 2020	Electric traction lifts — Replacement of existing passenger and goods passenger lifts in existing building
17518 (Part 2) : 2021	Fire-resistance tests: Part 2 Lift landing door assemblies
17805 (Part 1) : 2022	Electrical requirements for lifts escalators and moving walks: Part 1 Electromagnetic compatibility with regard to emission
17805 (Part 2) : 2022	Electrical requirements for lifts escalators and moving walks: Part 2 Electromagnetic compatibility with regard to immunity
17900 (Part 2) : 2022	Lifts for the transport of persons and goods: Part 2 Design rules, calculations, examinations and tests of lift components
17900 (Part 6) : 2022	Lifts for the transport of persons and goods: Part 6 Guide for maintenance of lifts
IS/IEC 60529 : 2001	Degrees of protection provided by enclosures (IP Code)
IS/IEC 60947-4-1 : 2012	Low-voltage switchgear and controlgear: Part 4 Contactors and motor — Starters, Section 1 Electromechanical contactors and motor — Starters (*first revision*)
IS/IEC 60947-5-1 : 2009	Low-voltage switchgear and controlgear: Part 5 Control circuit devices and switching elements, Section 1 Electromechanical control circuit devices (*first revision*)
IS/IEC 60947-5-5 : 2016	Low-voltage Switchgear and controlgear: Part 5 Control circuit devices and switching elements, Section 5 Electrical emergency stop devices with mechanical latching function
IS/IEC 61439-1 : 2011	Low-voltage switchgear and controlgear assemblies: Part 1 General rules
IS/IEC 61508 series	Functional safety of electrical/ electronic/programmable electronic safety-related systems
IS/IEC 61800-5-2 : 2016	Adjustable speed electrical power drive systems: Part 5 Safety requirements, Section 2 Functional
IS/ISO/TS 9002 : 2016	Quality management systems — Guidelines for the application of IS/ISO 9001 : 2015
IEC 60245-5 : 1994	Rubber insulated cables — Rated voltages up to and including 450/750 V — Part 5: Lift cables
IEC 60417 : 2002 DB	Graphical symbols for use on equipment
ISO 4190-5 : 2006	Lift (elevator) installation — Part 5: Control devices, signals and additional fittings
ISO 4344 : 2004	Steel wire ropes for lifts — Minimum requirements

Free Standard provided by BIS via BSB Edge Private Limited to Akshay Chaudhary - Chennai(akshay.chdary@gmail.com) 136.238.2.51 [for non-commercial use only].

IS No./ International Publication	*Title*
ISO 7000 : 2014	Graphical symbols for use on equipment — Registered symbols
ISO 8100-20 : 2018	Lifts for the transport of persons and goods — Part 20: Global essential safety requirements (GESRs)
ISO/TS 8100-21 : 2018	Lifts for the transport of persons and goods — Part 21: Global safety parameters (GSPs) meeting the global essential safety requirements (GESRs)
ISO 14798 : 2009	Lifts (elevators), escalators and moving walks — Risk assessment and reduction methodology
ISO 29584 : 2015	Glass in building — Pendulum impact testing and classification of safety glass
Electricity Act, 2003	

3 TERMINOLOGY

For the purposes of this Standard, the following terms and definitions as well as terms and definitions given in IS 16819 apply.

3.1 Apron — Smooth vertical part extending downwards from the sill of the landing or car entrance.

3.2 Authorized Person — Person with the permission of the natural or legal person who has the responsibility for the operation and use of the lift, to access restricted areas (machinery spaces, pulley rooms and lift well) for maintenance, inspection or rescue operations.

NOTE — Authorized persons should be competent for the tasks they have been authorized for (*see also* **3.7**).

3.2 a) Automatic Rescue Device — Device that operates automatically in case of failure or loss of power supply to move the lift car to a landing.

3.3 Available Car Area — Area of the car, which is available for passengers or goods during operation of the lift.

3.4 Balancing Weight — Mass which saves energy by balancing all or part of the mass of the car.

3.5 Buffer — Resilient stop at the end of travel, and comprising a means of braking using fluids or springs (or other similar means).

3.6 Car — Part of the lift which carries the passengers and/or other loads.

3.6 a) Compensation Means — Includes all ropes/CSB/elastomeric coated belts to counterbalance suspension means.

3.7 Competent Person — Person, suitably trained, qualified by knowledge and practical experience, provided with necessary instructions to safely carry out the required operations for maintaining or inspecting the lift, or rescuing users.

NOTE — National/State regulations can require certification of competence.

3.8 Counterweight — Mass which ensures traction.

3.9 Direct Acting Lift — Hydraulic lift where the ram or cylinder is directly attached to the car or its sling.

3.10 Down Direction Valve — Electrically controlled valve in a hydraulic circuit for controlling the descent of the car.

3.11 Drive Control System — System controlling and monitoring the running of the lift machine.

3.12 Electrical Anti-Creep System — Combination of precautions for hydraulic lifts against the danger of creeping.

3.13 Electric Safety Chain — The total of the electric safety devices connected in such a way as to stop the lift when one of them is activated.

3.14 Full Load Pressure — Static pressure exerted on the piping, jack, valve block, etc., with the car and rated load being at rest at the highest landing level.

3.15 Goods Lift — Lift mainly intended for the transport of goods and on which only the operator and the persons necessary for loading/unloading of the goods are permitted to ride.

3.16 Guide Rails — Rigid components which provide guiding for the car, the counterweight or the balancing weight.

3.17 Headroom — Part of the well between the highest landing served by the car and the ceiling of the well.

3.18 Hydraulic Lift — Lift in which the lifting power is derived from an electrically driven pump transmitting hydraulic fluid to a jack, acting directly or indirectly on the car (multiple motors, pumps and/or jacks may be used).

3.19 Indirect Acting Lift — Hydraulic lift where the ram or cylinder is connected to the car or the car sling by suspension means (Ropes or Coated Steel Belts (CSBs)).

3.20 Installer — Legal or natural person taking responsibility to erect and commission the lift at its final location in the building.

Free Standard provided by BIS via BSB Edge Private Limited to Akshay Chaudhary - Chennai(akshay.chdary@gmail.com) 136.238.2.51 [for non-commercial use only].

3.21 Instantaneous Safety Gear — Safety gear in which the full gripping action on the guide rails is almost immediate.

3.22 Jack — Combination of a cylinder and a ram forming a hydraulic actuating unit.

3.23 Laminated Glass — Assembly of two or more glass layers, each of which is bonded together with one or more plastic or liquid interlayers.

3.24 Levelling — Operation which achieves the accuracy of stopping at landings.

3.25 Levelling Accuracy — Vertical distance between car sill and landing sill during loading or unloading of the car.

3.26 Lift Machine — Unit which drives and stops the lift, including any motor, gear, brake, sheave and drum (traction or positive drive lift) or comprising the pump, pump motor and control valves (hydraulic drive lift).

3.26 a) Load Bearing Member — Steel wire rope or steel wire strand inside of an elastomeric coated belt.

3.27 Machine Room — Fully enclosed machinery space with ceiling, walls, floor and access door(s) in which machinery as a whole or in parts is placed.

3.28 Machinery — Equipment such as: control cabinet(s) and drive system, lift machine, main switch(es), and means for emergency operations.

3.29 Machinery Space — Volume(s) inside or outside of the well where the machinery as a whole or in parts is placed, including the working areas associated with the machinery.

NOTE — A machinery cabinet with its associated working area(s) is considered as a machinery space.

3.30 Maintenance — All the necessary operations to ensure the safe and intended functioning of the installation and its components after the completion of the installation and throughout its life cycle.

NOTE — Maintenance can include:

a) lubrication, cleaning, etc.;
b) checks;
c) rescue operations;
d) operations of setting and adjustment;
e) repair or changing of components which can occur due to wear or tear and do not affect the characteristics of the installation.

3.30 a) Minimum Breaking Load (MBL) — Specified value in kN below which the measured breaking load is not allowed to fall in a breaking load test.

3.31 Non Return Valve — Valve which allows flow in one direction only.

3.32 One-Way Restrictor — Valve which allows free flow in one direction and restricted flow in the other direction.

3.33 Overspeed Governor — Device which, when the lift attains a predetermined speed, causes the lift to stop, and if necessary, causes the safety gear to be applied.

3.34 Passenger — Any person transported by a lift in the car.

3.35 Pawl Device — Mechanical device for stopping involuntary descent of the car, and maintaining it stationary on fixed supports.

3.36 Pit — The part of the well situated below the lowest landing served by the car.

3.37 Positive Drive Lift — Lift which is directly driven (not reliant on friction) by drum and ropes.

NOTE — In this standard, the term "positive drive lift" includes drum drive.

3.38 Preliminary Operation — Energizing of the machine and the brake/hydraulic valve as preparation to a normal run when the car is in the door zone and doors are not closed and locked.

3.39 Pressure Relief Valve — Valve which limits the pressure to a pre-determined value by exhausting fluid.

3.40 Programmable Electronic System in Safety Related Applications for Lifts (PESSRAL) — System for control, protection or monitoring based on one or more programmable electronic devices, including all elements of the system such as power supplies, sensors and other input devices, data highways and other communication paths, and actuators and other output devices, used in safety-related applications as listed in Table A-1.

3.41 Progressive Safety Gear — Safety gear in which retardation is effected by a braking action on the guide rails and for which special provisions are made so as to limit the forces on the car, counterweight or balancing weight to a permissible value.

3.42 Pulley Room — Room not containing the machine, in which pulleys are located, and in which the overspeed governor can also be housed.

3.43 Rated Load — Load which is intended to be carried in normal operation, which can include handling devices (*see* **0.4.2**).

3.44 Rated Speed (v) — Speed in metres per second of the car for which the equipment has been built.

NOTE — For hydraulic drive lifts:

a) v_m is the rated speed upwards in metres per second;
b) v_d is the rated speed downwards in metres per second;
c) v_s is the higher value of both rated speeds v_m and v_d in metres per second.

Free Standard provided by BIS via BSB Edge Private Limited to Akshay Chaudhary - Chennai(akshay.chdary@gmail.com) 136.238.2.51 [for non-commercial use only].

3.45 Re-levelling — Operation, after the lift has stopped, to permit the stopping position to be corrected during loading or unloading.

3.46 Rescue Operations — Specific actions required to safely release persons entrapped in the car and well by competent persons.

3.46 a) Residual Breaking Load (RBL) — Measured value of suspension member after normal use at the end of expected life span which is detected when discard criteria have been reached.

3.47 Restrictor — Valve in which the inlet and outlet are connected through a restricted passage way.

3.48 Rupture Valve — Valve designed to close automatically when the pressure drop across the valve, caused by the increased flow in a pre-determined flow direction, exceeds a pre-set amount.

3.49 Safety Circuit — Circuit containing contacts and/or electronic components which is regarded to fulfil demands of an electric safety device.

3.50 Safety Component — Component provided to fulfil a safety function when in use.

3.51 Safety Gear — Mechanical device for stopping in the down direction, and maintaining stationary on the guide rails, the lift car, counterweight or balancing weight in case of overspeeding or breaking of the suspension.

3.52 Safety Integrity Level (SIL) — Discreet level (one out of a possible three) for specifying the safety-integrity requirements of the safety functions allocated to the programmable electronic safety-related system, where safety-integrity level 3 has the highest level of safety integrity and safety-integrity level 1 has the lowest.

3.53 Safety Rope — Auxiliary rope attached to the car, the counterweight or balancing weight for the purpose of tripping a safety gear in case of suspension failure.

3.54 Shut-off Valve — Manually operated two-way valve which can permit or prevent flow in either direction.

3.55 Single Acting Jack — Jack in which displacement in one direction is by fluid action and in the other by influence of gravity.

3.56 Sling — Metal framework carrying the car, counterweight or balancing weight, connected to the means of suspension.

NOTE — This sling can be integral with the car enclosure.

3.57 Special Tool — Tool unique to the equipment required in order to keep the equipment in a safe operating condition or for rescue operations.

3.58 Stopping Accuracy — Vertical distance between car sill and landing sill at the moment when a car is stopped by the control system at its destination floor and the doors reach their fully open position.

3.58 a) Suspension Means — Includes all ropes/elastomeric coated belts suspending car/counterweight/balancing weight and is engaged to car/counterweight/balancing weight side termination.

3.58 b) Suspension Member — Is one rope/elastomeric coated belt in the system to suspend car/counterweight and is engaged to car/counterweight side terminations.

3.59 Traction Lift — Lift whose suspension means are driven by friction on the driving sheave of the machine.

3.60 Travelling Cable — Flexible electric cable containing multiple cores between the car and a fixed point.

3.61 Type Examination Certificate — Document issued by certifying entity carrying out a type-examination in which it certifies that the product example under consideration complies with the provisions applicable to it as noted in the certificate.

NOTE — For the process of type examination and definition of certifying entity, *see* IS 17900 (Part 2).

3.62 Unintended Car Movement — Non-commanded movement of the car with doors open within the door zone away from the landing, excluding movements resulting from loading/unloading operation.

3.63 Unlocking Zone — Zone, extending above and below the landing level, in which the car floor has to be, to enable the corresponding landing door to be unlocked.

3.64 User — Person making use of the services of a lift installation which includes passengers, persons waiting at the landings and authorized persons.

3.65 Well — Space in which the car, the counterweight or the balancing weight travels. This space is usually bounded by the bottom of the pit, the walls and the ceiling of the well.

4 LIST OF SIGNIFICANT HAZARDS

This clause contains all the significant hazards, hazardous situations and events, as far as they are dealt with in this standard, identified by risk assessment as significant for this type of machinery and which require action to eliminate or reduce the risk (*see* Table 1).

Free Standard provided by BIS via BSB Edge Private Limited to Akshay Chaudhary - Chennai(akshay.chdary@gmail.com) 136.238.2.51 [for non-commercial use only].

Table 1 List of Significant Hazards

(*Clause* 4)

Sl No.		Hazards (as listed in Annex B of IS 16819)	Relevant Subclauses
(1)		(2)	(3)
1	**Mechanical Hazards Due to**		
	i)	Acceleration, deceleration (kinetic energy)	**5.2.5**; **5.3.6**, **5.5.3**; **5.6.2**; **5.6.3**; **5.6.6**; **5.6.7**; **5.8.2**; **5.9.2**; **5.9.3**
	ii)	Approach of a moving element to a fixed part	**5.2.5**; **5.2.6**; **5.5.8**
	iii)	Falling objects	**5.2.5**; **5.2.6**
	iv)	Gravity (stored energy)	**5.2.5**
	v)	Height from the ground	**5.3**; **5.4.7**; **5.5**; **5.6**
	vi)	High pressure	**5.4.2**; **5.9.3**; *See* also **1.3**
	vii)	Moving elements	**5.2**; **5.3**; **5.4**; **5.5**; **5.6**; **5.7**; **5.8**
	viii)	Rotating elements	**5.5.7**; **5.6.2**; **5.9.1**
	ix)	Rough, slippery surface	**5.2.1**; **5.2.2**; **5.4.7**
	x)	Sharp edges	Not addressed. *See* **5.1.1**
	xi)	Stability	*See* 0.4.3
	xii)	Strength	*See* 0.4.3
	xiii)	Crushing hazard	**5.2.5**; **5.3**
	xiv)	Shearing hazard	**5.3**
	xv)	Entanglement hazard	**5.5.7**; **5.6.2**; **5.9.1**
	xvi)	Drawing-in or trapping hazard	**5.2.1**; **5.3.1**; **5.3.8**; **5.4.11**; **5.5.3**; **5.5.7**; **5.6.2**; **5.9.1**; **5.10.5**; **5.12.1**
	xvii)	Impact hazard	**5.8**
	xviii)	— Slip, trip and fall of persons (related to machinery)	**5.2.1**; **5.2.2**; **5.3.11**; **5.4.7**; **5.3**; **5.5**; **5.6**; **5.12.1.1.4**
	xix)	— Uncontrolled amplitude of movements	**5.2.1**; **5.2.5**; **5.5.6**; **5.8**
	xx)	— From insufficient mechanical strength of parts	*See* 0.4.3
	xxi)	— From inadequate design of pulleys, drums	**5.5.3**
	xxii)	— Falling of person from person carrier	**5.3**; **5.4.3**; **5.4.7**
2	**Electrical Hazards**		
	xxiii)	Arc	**5.11.2**
	xxiv)	Live parts	**5.2.6**; **5.11.2**; **5.12.1**
	xxv)	Overload	**5.10.4**
	xxvi)	Parts which have become live under faulty conditions	**5.10.1**; **5.10.2**; **5.10.3**; **5.11.2**
	xxvii)	Short-circuit	**5.10.3**; **5.10.4**, **5.11.1**; **5.11.2**
	xxviii)	Thermal radiation	**5.10.1**
3	**Thermal Hazards**		
	xxix)	Flame	**5.3.6**
	xxx)	Objects or materials with a high or low temperature	**5.10.1**
	xxxi)	Radiation from heat sources	**5.10.1**
4	**Hazards Generated by Noise**		Not relevant (*See* **1.3**)
5	**Hazards Generated by Vibration**		Not relevant (*See* **1.3**)
6	**Hazards Generated by Radiation**		
	xxxii)	Low frequency electromagnetic radiation	**5.10.1.1.3**
	xxxiii)	Radio frequency electromagnetic radiation	**5.10.1.1.3**

Free Standard provided by BIS via BSB Edge Private Limited to Akshay Chaudhary - Chennai(akshay.chdary@gmail.com) 136.238.2.51 [for non-commercial use only].

Table 1 (*Concluded*)

Sl No.		Hazards (as listed in Annex B of IS 16819)	Relevant Subclauses
(1)		(2)	(3)
7	**Hazards Generated by Materials and Substances**		
	xxxiv)	Combustible	**5.4.4**
	xxxv)	Dust	**5.2.1**
	xxxvi)	Explosive	Not addressed (*See* **1.2**)
	xxxvii)	Fibre	0.4.3
	xxxviii)	Flammable	**5.9.3**
	xxxix)	Fluid	0.4.22; **5.2.1**
8	**Hazards Generated by Neglecting Ergonomic Principles in Machinery Design** as, for example, hazards from		
	xl)	Access	**5.2.1**; **5.2.2**; **5.2.4**; **5.2.5**; **5.2.6**; **5.6.2**; **5.9.3**; **5.12.1**
	xli)	Design or location of indicators and visual displays units	**5.2.6**; **5.3.9**; **5.12.1.1**; **5.12.4**
	xlii)	Design, location or identification of control devices	**5.4.8**; **5.10.5**; **5.10.8**; **5.10.10**; **5.12.1.1**; **5.12.1.5**
	xliii)	Effort	**5.2.1**; **5.2.3**; **5.2.5**; **5.2.6**; **5.3.8**; **5.3.12**; **5.3.14**; **5.4.7**; **5.9.2**
	xliv)	Local lighting	**5.2.1**; **5.2.2**; **5.2.6**; **5.3.10**; **5.4.10**; **5.10.1**; **5.10.5**; **5.10.7**; **5.10.8**
	xlv)	Repetitive activity	**5.12.1**
	xlvi)	Visibility	**5.2.5**; **5.9.1**; **5.12.1**
9	**Hazards Associated with the Environment in which the Machine is Used**		
	xlvii)	Dust and fog	**5.2.1**
	xlviii)	Electromagnetic disturbance	**5.10.1**
	xlix)	Moisture	**5.2.1**, **5.2.6**
	l)	Temperature	**5.2.1**; **5.2.6**; **5.3.12**; **5.9.3**; **5.10.4**
	li)	Water	**5.2.1**; **5.2.6**
	lii)	Wind	**5.7.2.3.1** a) 2)
	liii)	Failure of the power supply	**5.2.1**; **5.2.3**; **5.2.4**; **5.2.5**; **5.2.6**; **5.3.12**; **5.4.3**; **5.6.2**; **5.9.2**; **5.9.3**; **5.12.1**; **5.12.3**
	liv)	Failure of the control circuit	**5.6.7**
	lv)	Unexpected start-up, unexpected overrun/overspeed (or any similar malfunction) from restoration of energy supply after an interruption	**5.2.1**; **5.2.6**; **5.4.7**; **5.6.2**; **5.6.5**; **5.6.6**; **5.6.7**; **5.8**; **5.10.5**; **5.12.2**

5 SAFETY REQUIREMENTS AND/OR PROTECTIVE MEASURES

5.1 General

5.1.1 Passenger and goods lifts shall comply with the safety requirements and/or protective measures of the following clauses. In addition, the passenger and goods lifts shall be designed according to the principles of IS 16819 for hazards relevant but not significant that are not dealt with by this standard (for example, sharp edges).

5.1.2 All labels, notices, markings and operating instructions shall be permanently affixed, indelible, legible and readily understandable (if necessary aided by signs or symbols). They shall be of durable material, placed in a visible position, and written in the accepted language(s) of the country/state where the lift is installed.

5.2 Well, Machinery Spaces and Pulley Rooms

5.2.1 *General Provisions*

Free Standard provided by BIS via BSB Edge Private Limited to Akshay Chaudhary - Chennai(akshay.chdary@gmail.com) 136.238.2.51 [for non-commercial use only].

5.2.1.1 *Arrangement of lift equipment*

5.2.1.1.1 All lift equipment shall be located in the well or in machinery spaces or pulley rooms.

5.2.1.1.2 If parts of different lifts are present in one machine and/or pulley room, each lift shall be identified with a number, letter or colour consistently used for all parts (machine, controller, overspeed governor, switches, etc.).

5.2.1.2 *Exclusive use of the well, machine and pulley rooms*

5.2.1.2.1 The well, machine and pulley rooms shall not be used for purposes other than lifts. They shall not contain ducts, cables or devices other than for the lift.

The lift well, machine and pulley rooms may, however, contain:

a) equipment for air-conditioning or heating of these spaces, excluding steam heating and high-pressure water heating. However, any control and adjustment devices of the heating apparatus shall be located outside the well.
b) fire detectors or extinguishers, with a high operating temperature (for example, above 80°C), appropriate for the electrical equipment and suitably protected against accidental impact.

When sprinkler systems are used, activation of the sprinkler shall only be possible, when the lift is stationary at a landing and the electrical supply of the lift and lighting circuits are automatically switched off by the fire or smoke detection system.

NOTE — Such smoke, fire detection and sprinkler systems are the responsibility of the building management.

5.2.1.2.2 Machine rooms may contain machines for other kinds of lifts, for example, goods only lifts.

5.2.1.2.3 In the case of partially enclosed lift wells according to **5.2.5.2.3**, the well is regarded as the area:

a) inside the enclosure where enclosures are present;
b) being within a horizontal distance of 1.50 m from movable components of the lift, where enclosures are missing.

5.2.1.3 *Ventilation of the well, machinery spaces and pulley rooms*

The well, machinery spaces and pulley rooms shall not be used to provide ventilation of rooms other than those belonging to the lift.

Ventilation shall be such that the motors and equipment, as well as electric cables, etc., are protected from dust, harmful fumes and humidity.

NOTE — *See* **E-3** for further guidance.

5.2.1.4 *Lighting*

5.2.1.4.1 The well shall be provided with permanently installed electric lighting, giving the following intensity of illumination, even when all doors are closed, at any position of the car throughout its travel in the well:

a) at least 50 lux, 1.0 m above the car roof within its vertical projection;
b) at least 50 lux, 1.0 m above the pit floor and above the pit platform (where provided), everywhere a person can stand, work and/or move between the working areas;
c) at least 20 lux outside of the locations defined in a) and b), excluding shadows created by car or components.

To achieve this, sufficient number of lamps shall be fixed throughout the well and, where necessary, additional lamp(s) may be fixed on the car roof as a part of the well's lighting system.

Lighting elements shall be protected against mechanical damage.

The supply for this lighting shall be in conformity with **5.10.7.1**.

NOTE — For specific tasks, additional temporary lighting can be necessary, for example, by hand lamp.

The light meter should be oriented towards the strongest light source when taking lux level readings.

5.2.1.4.2 Machinery spaces and pulley rooms shall be provided with permanently installed electric lighting with an intensity of at least 200 lux at floor level everywhere a person needs to work, and 50 lux at floor level to move between working areas. The supply for this lighting shall be in conformity with **5.10.7.1**.

NOTE — This lighting can be part of the lighting of the well.

5.2.1.5 *Electric equipment in the pit and in machinery spaces and pulley rooms*

5.2.1.5.1 There shall be in the pit:

a) stopping device(s) visible and accessible on opening the door(s) to the pit, and from the pit floor, in conformity with the requirements of **5.12.1.11**. The stopping device(s) shall be located as follows:
   1) For pits with depth less than or equal to 1.60 m, the stop switch shall be:
      i) within a vertical distance of minimum 0.40 m above the lowest landing floor and a maximum of 2.0 m from the pit floor;
      ii) within a horizontal distance of maximum 0.75 m from the door frame inner edge.
   2) For pits with depth greater than 1.60 m, two stop switches shall be provided:

Free Standard provided by BIS via BSB Edge Private Limited to Akshay Chaudhary - Chennai(akshay.chdary@gmail.com) 136.238.2.51 [for non-commercial use only].

i) the upper switch within a vertical distance of minimum 1.0 m above the lowest landing floor and within a horizontal distance of maximum 0.75 m from the door frame inner edge;

ii) the lower one within a maximum vertical distance of 1.20 m above pit floor operable from a refuge space.

3) In the case of a pit access door, other than landing doors, a single stop switch, within a horizontal distance of maximum 0.75 m from the access door frame inner edge, at 1.20 m in height from the pit floor.

Where there are two landing doors at the same level giving access to the pit, then one shall be determined as the pit access door, having the access equipment;

NOTE — The stop switch can be combined with the inspection station required in b).

b) a permanently installed inspection control station according to **5.12.1.5**, operable within 0.30 m of a refuge space.

c) a socket outlet (*see* **5.10.7.2**).

d) means to switch the well lighting (*see* **5.2.1.4.1**), positioned within a maximum horizontal distance of 0.75 m from the pit access door frame inner edge and at a minimum height of 1.0 m above the access floor level.

5.2.1.5.2 There shall be in machinery spaces and pulley rooms:

a) a switch accessible only to authorized persons and placed close to each access point, at an appropriate height, controlling the lighting of the areas and spaces;

b) at least one socket outlet (*see* **5.10.7.2**) provided at an appropriate place for each working area; and

c) a stopping device, in conformity with **5.12.1.11**, installed in the pulley room, close to each point of access.

5.2.1.6 *Emergency release*

If no means to escape are provided for person(s) trapped in the well, alarm system according to **5.12.3.1** shall be installed at places where the risk of trapping exists (*see* **5.2.1.5.1, 5.2.6.4** and **5.4.7**), operable from the refuge space(s).

If there is a risk of trapping in areas outside of the well, such risks should be discussed with the building owner [*see* **0.4.2 e)**].

5.2.1.7 *Handling of equipment*

One or more suspension point(s) with the indication of the safe working load, as appropriate, shall be provided in the machinery spaces and where necessary, at the top of the well, conveniently positioned to permit the hoisting of heavy equipment (*see* **0.4.2** and **0.4.15**).

5.2.1.8 *Strength of walls, floors and ceilings*

5.2.1.8.1 The structure of the well, machinery spaces and pulley rooms shall conform to national/state building regulations and shall be able to support at least the loads which can be applied by the machine; by the guide rails at the moment of safety gear operation, in the case of eccentric load in the car; by the action of the buffers; by those which can be applied by the anti-rebound device; by loading and unloading the car; etc. *See* also **Annex E**, **E-1**.

5.2.1.8.2 The walls of the well shall have a mechanical strength such that when a force of 1 000 N, being evenly distributed over an area of 0.30 m × 0.30 m in round or square section, is applied at right angles to the wall at any point on either face, they shall resist without:

a) permanent deformation greater than 1 mm;

b) elastic deformation greater than 15 mm.

5.2.1.8.3 Glass panels, plane or formed, shall be made of laminated glass.

They and their fixings shall withstand 1 000 N horizontal static force on an area of 0.30 m × 0.30 m at any point, from both inside and outside the well, without permanent deformation.

5.2.1.8.4 The floor of the pit shall be able to support beneath each guide rail, except hanging guide rails, the force due to the mass of the guide rails plus any load due to components fixed or linked to the guide(s) and/or any additional reaction, *N*, occurring during emergency stopping (for example, load on traction sheave due to rebound when machine on rails), plus the reaction at the moment of operation of the safety gear and any push through force exerted by the guide rails clips (*see* **5.7.2.3.5**).

5.2.1.8.5 The floor of the pit shall be able to support beneath the car buffer supports, four times the static load imposed by the mass of the fully loaded car, evenly distributed between the total number of car buffers [*see* **Formula (1)**]:

$$F = 4 \times g_n \times (P + Q) \quad \text{... (1)}$$

where

F is the total vertical force in newtons;

g_n is the standard acceleration of free fall, [9.81 (m/s^2)];

P is the mass of the empty car and components supported by the car that is, part of the travelling cable, compensation means (if any), etc. in kilograms;

Q is the rated load (mass), in kilograms.

Free Standard provided by BIS via BSB Edge Private Limited to Akshay Chaudhary - Chennai(akshay.chdary@gmail.com) 136.238.2.51 [for non-commercial use only].

5.2.1.8.6 The floor of the pit shall be able to support beneath the counterweight buffer supports, four times the static load imposed by the mass of the counterweight, evenly distributed between the total number of counterweight buffers [*see* **Formula (2)**]:

$$F = 4 \times g_n \times (P + q \times Q) \quad \text{... (2)}$$

where

F is the total vertical force, in newtons;

g_n is the standard acceleration of free fall, [9.81 (m/s^2)];

P is the mass of the empty car and components supported by the car that is, part of the travelling cable, compensation means (if any), etc., in kilograms;

Q is the rated load (mass), in kilograms;

q is the balance factor indicating the amount of counterbalance of the rated load by the counterweight.

5.2.1.8.7 For hydraulic lifts, the floor of the pit shall be able to support beneath each jack the loads and forces (in newtons) imposed to it.

5.2.1.8.8 For hydraulic lifts, the total vertical force imposed on the fixed stops during operation of the pawl device can be evaluated approximately according to the following formulae:

a) Pawl devices provided with energy accumulation type buffers [*see* **Formula (3)**]:

$$F = \frac{3 \times g_n \times (P + Q)}{n} \quad \text{... (3)}$$

b) Pawl devices provided with energy dissipation type buffers [*see* **Formula (4)**]:

$$F = \frac{2 \times g_n \times (P + Q)}{n} \quad \text{... (4)}$$

where

F is the total vertical force in newtons on fixed stops imposed during operation of pawl device;

g_n is the standard acceleration of free fall, [9.81 (m/s^2)];

n is the number of pawl devices;

P is the mass of the empty car and components supported by the car, that is, part of the travelling cables, compensation means (if any), etc., in kilograms;

Q is the rated load (mass) in kilograms.

5.2.1.9 *Surfaces of walls, floors and ceilings*

Surfaces of walls, floors and ceilings of wells, machine and pulley rooms shall be in durable material not favouring the creation of dust, for example, concrete, brick or blockwork.

The surface of the floor where a person needs to work or to move between working areas shall be of non-slip material.

NOTE — For guidance, *see* **4.2.4.6** of IS 16809 (Part 2).

The floor of working areas shall be approximately level, except for any buffer and guide rail bases and water drainage devices.

After the building-in of guide rail fixings, buffers, any grids, etc., the pit shall be impervious to infiltration of water.

For hydraulic lifts, the space in which the power unit is situated and the pit shall be designed in such a way that it is impervious, so that all the fluid contained in the machinery placed in these areas is retained if it leaks out or escapes.

NOTE — National/State regulations can require the protection of hydraulic pipe routed through the building.

5.2.2 *Access to Well and to Machinery Spaces and Pulley Rooms*

5.2.2.1 The well, machinery spaces and pulley rooms and the associated working areas shall be accessible. Provisions shall be made to allow access to spaces other than the car interior only to authorized persons. See also **Annex D**, **Fig. D-1**.

5.2.2.2 The access way adjacent to any door/trap giving access to the well or to machinery spaces and pulley rooms shall be lit by a permanently installed electric lighting with an intensity of at least 50 lux.

NOTE — National/State regulations can require lighting level greater than 50 lux.

5.2.2.3 If access to the lift for maintenance and rescue purposes is via private premises, then permanent access of authorized persons to the premises and relevant instructions shall be provided.

The manufacturer/installer should make the building designer/architect/owner aware of the agreement regarding access, fire, entrapment and also problems of security associated with lifts serving directly into private premises (*see* **0.4.2**).

NOTE — Access via private premises can be subject to national/state regulations.

5.2.2.4 A means to enter the pit shall be provided consisting of:

a) an access door where the pit depth exceeds 2.50 m;

b) either an access door or a ladder inside the well, easily accessible from the landing door, where the pit depth is not exceeding 2.50 m.

Free Standard provided by BIS via BSB Edge Private Limited to Akshay Chaudhary - Chennai(akshay.chdary@gmail.com) 136.238.2.51 [for non-commercial use only].

Any pit access door shall comply with the requirements of **5.2.3**.

NOTE — The National Building Code may be referred to when pit depth exceeds 2.5 m and where an access door cannot be provided.

Ladders shall comply with **Annex F**.

Where there is a risk of the ladder in its deployed position colliding with moving elements of the lift, the ladder shall be provided with an electric safety device(s) in accordance with **5.11.2** to prevent the lift from operating if the ladder is not in its stored position.

If the ladder is stored on the pit floor, all pit refuge spaces shall be maintained when the ladder is in its stored position.

5.2.2.5 A safe access for persons to machinery spaces and pulley rooms shall be provided. For preference, this should be effected entirely by way of stairs. If it is not possible to install stairs, ladders satisfying the following requirements shall be used:

a) the access to the machinery spaces and pulley rooms shall not be situated more than 4 m above the level accessible by stairs. For access over 3 m in height by ladder, fall protection shall be provided;
b) ladders shall be fastened to the access permanently or at least by rope or chain in such a way that they cannot be removed;
c) ladders exceeding 1.50 m in height shall, when in position for access, form an angle between 65° and 75° to the horizontal and shall not be liable to slip or turn over;
d) the clear width of the ladder shall be at least 0.35 m, the depth of the steps shall not be less than 25 mm and in the case of vertical ladders the distance between the steps and the wall behind the ladder shall not be less than 0.15 m. The steps shall be designed for a load not less than 1500 N;
e) adjacent to the top end of the ladder, there shall be at least one hand hold within easy reach;
f) around a ladder, within a horizontal distance of 1.50 m, the risk of falling by more than the height of the ladder shall be prevented.

NOTE — National/State building regulations can require access only by stairs.

5.2.3 *Access and Emergency Doors — Access Trap Doors — Inspection Doors*

5.2.3.1 When the distance between consecutive landing door sills exceeds 11 m, intermediate emergency lift landing door(s) shall be provided such that the distance between landings is not more than 11 m. Rescue to these landings is permissible in case of automatic rescue device operation.

NOTE — "Consecutive" is understood as meaning two adjacent floors, with landing doors, regardless of open through or open adjacent configurations.

5.2.3.2 Access and emergency doors, access trap doors and inspection doors shall have the following dimensions:

a) access doors to machine rooms and access doors to the well shall have a minimum height of 2.0 m and a minimum width of 0.60 m;
b) access doors to pulley rooms shall have a minimum height of 1.40 m and a minimum width of 0.60 m;
c) access trap doors for persons to machine and pulley rooms shall give a clear passage of at least 0.80 m × 0.80 m, and shall be counterbalanced;
d) emergency doors shall have a minimum height of 1.80 m and a minimum width of 0.50 m;
e) inspection doors shall have a maximum height of 0.50 m and a maximum width of 0.50 m and shall have sufficient dimensions to carry out the required work through the door.

5.2.3.3 Access and emergency doors and inspection doors shall:

a) not open towards the inside of the well or machine or pulley room;
b) be provided with a key-operated lock, capable of being reclosed and relocked without a key;
c) be openable from inside the well, machine or pulley room without a key, even when locked;
d) be provided with an electric safety device in conformity with **5.11.2**, checking the closed position; An electric safety device is not required in the case of access door(s) to machine and pulley rooms and in the case of access door(s) to the pit (*see* **5.2.2.4**), if the pit door(s) does not give access to a hazardous zone. This is regarded to be the case if the free vertical distance between the lowest parts of car, counterweight or balancing weight including guide shoes, apron, etc. during normal operation and the bottom of the pit is at least 2 m

   The presence of travelling cables, compensation means and their equipment, tensioning pulleys for the overspeed governor and similar installations is not regarded as being hazardous;
e) be imperforate, satisfy the same requirements for mechanical strength as the landing doors, and comply with the regulations relevant to the fire protection for the building concerned;
f) have a mechanical strength such that when a force of 1 000 N, being evenly distributed over an area of 0.30 m × 0.30 m in round or square section, is applied at right angles at any point from outside the well, it shall resist without elastic deformation greater than 15 mm.

Free Standard provided by BIS via BSB Edge Private Limited to Akshay Chaudhary - Chennai(akshay.chdary@gmail.com) 136.238.2.51 [for non-commercial use only].

5.2.3.4 Access trap doors, when they are closed, shall be able to support 2 000 N on an area of 0.20 m × 0.20 m at any position.

Trap doors shall not open downwards. Hinges, if any, shall be of a type which cannot be unhooked. Trap doors used only for access of material may be locked from the inside only.

When a trap door is in the open position, precautions shall be taken to prevent the fall of persons (for example, a guardrail) and prevent the trapdoor from closing such as to cause a crushing hazard (for example, by counterbalance).

NOTE — National/State regulations can require a specific height for such protection from falls.

5.2.4 *Notices*

5.2.4.1 A notice bearing the following minimum inscription:

"Lift Machinery — Danger
Access forbidden to unauthorized persons"

shall be fixed to the outside of doors or trap-doors (excluding landing doors and doors of emergency and test panels) giving access to machine and pulley rooms.

The electrical warning sign shall be provided on the enclosure and access door to all machine rooms. Additional warning signs shall be provided as required by the *Electricity Act*, or the National Building Code, SP 7.

In the case of trap-doors, a permanently visible notice shall indicate to those using the trap-door:

"Danger of falling — Reclose the trap-door"

5.2.4.2 Outside of the well, near the access doors and emergency doors, if any, there shall be a notice stating:

"Lift well — Danger
Access forbidden to unauthorized persons"

5.2.5 *Well*

5.2.5.1 *General provisions*

5.2.5.1.1 The well may contain one or more lift cars.

5.2.5.1.2 The counterweight or the balancing weight of a lift shall be in the same well as the car.

5.2.5.1.3 For hydraulic lifts jacks shall be in the same well as the car. They may extend into the ground or other spaces.

5.2.5.2 *Well enclosure*

5.2.5.2.1 *General*

A lift shall be separated from the surroundings by:

a) walls, floor and ceiling; or
b) sufficient space.

For dimensions and other civil details, the National Building Code of India, SP 7 shall be referred to.

5.2.5.2.2 *Totally enclosed well*

5.2.5.2.2.1 The well shall be totally enclosed by imperforate walls, floor and ceiling. The only permissible openings are:

a) openings for landing doors;
b) openings for access and emergency doors to the well and inspection doors;
c) vent openings for escape of gases and smoke in the event of fire;
d) ventilation openings;
e) necessary openings for the functioning of the lift between the well and the machine or pulley rooms.

5.2.5.2.2.2 Any horizontal projection from a wall into the well or horizontal beam greater than 0.15 m width, including separator beams, shall be protected from a person standing there, unless access is prevented by a car top balustrade in accordance with **5.4.7.4**.

Protection shall be, such as:

a) the projection, where greater than 0.15 m, shall be chamfered to at least 45° to the horizontal; or
b) a deflector forming an inclined surface of minimum 45° to the horizontal, capable of resisting a force of 300 N applied at right angles to the deflector at any point, distributed evenly over a surface of 5 cm^2 in round or square section, such that it shall resist:
   1) without permanent deformation;
   2) without elastic deformation greater than 15 mm.

5.2.5.2.3 *Partially enclosed well*

Where the well is required to be partially enclosed, for example, observation lifts in connection with galleries or atriums, tower buildings, etc., the following apply:

a) the height of the enclosure at places normally accessible to persons shall be sufficient to prevent such persons from:

Free Standard provided by BIS via BSB Edge Private Limited to Akshay Chaudhary - Chennai(akshay.chdary@gmail.com) 136.238.2.51 [for non-commercial use only].

1) being endangered by moving parts of the lift;
2) interfering with the safe operation of the lift by reaching lift equipment within the well, either directly or with hand-held objects.

b) the height is assumed to be sufficient if it is in conformity with **Fig. 1** and **2** that is:
1) minimum 3.50 m at a landing door side;
2) minimum 2.50 m at other sides and with a minimum horizontal distance of 0.50 m to moving parts of the lift.

If the distance to moving parts exceeds 0.50 m, the value of 2.50 m can be reduced progressively to a minimum height of 1.10 m in a distance of 2.0 m.

c) the enclosure shall be imperforate.

d) the enclosure shall be located within 0.15 m maximum of the edges of floors, stairs or platforms (*see* **Fig. 1**) or be protected in accordance with **5.2.5.2.2.2**.

e) provisions shall be taken to prevent the interference with the operation of the lift by other equipment [*see* **5.2.1.2.3 b)** and **7.2.2 c)**].

f) special precautions shall be taken for lifts exposed to weather (*see* **0.4.5**), for example, wall climbing lifts installed against the exterior walls of a building.

5.2.5.3 *Construction of the walls of the well and landing doors facing a car entrance*

5.2.5.3.1 The horizontal distance between the inner surface of the well and the sill, door frame of the car or closing edge of car sliding doors shall not exceed 0.15 m, over the full height of the well (*see* **Fig. 3**).

The distance given above:

a) may be extended to 0.20 m over a height not exceeding 0.50 m. There shall not be more than one of such recesses in between two consecutive landing doors;

Dimensions in millimetres

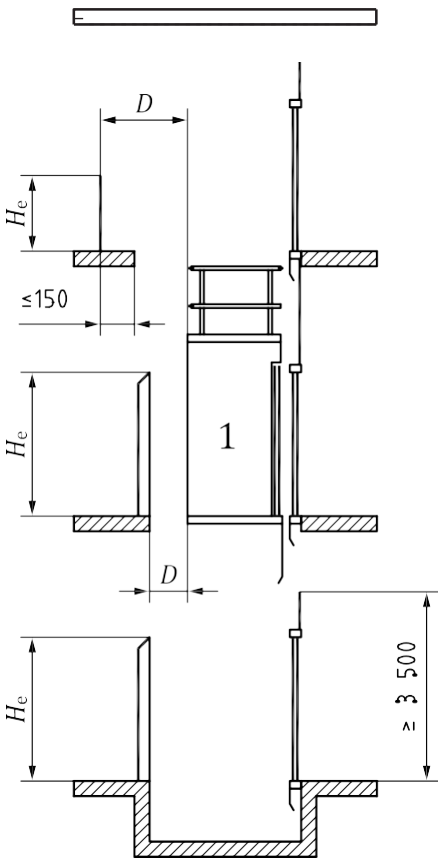

Key

1	car
D	distance to moving parts of lift (*See* **Fig. 2**)
H_e	height of enclosure

Fig. 1 Partially Enclosed Well

Free Standard provided by BIS via BSB Edge Private Limited to Akshay Chaudhary - Chennai(akshay.chdary@gmail.com) 136.238.2.51 [for non-commercial use only].

Dimensions in millimetres

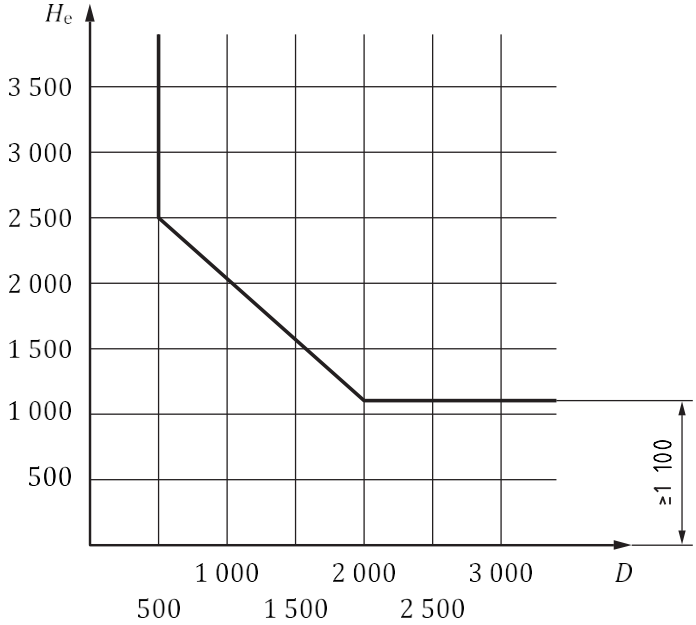

Key

H_e	height of enclosure
D	distance to moving parts of the lift

Fig. 2 Partially Enclosed Well — Distances

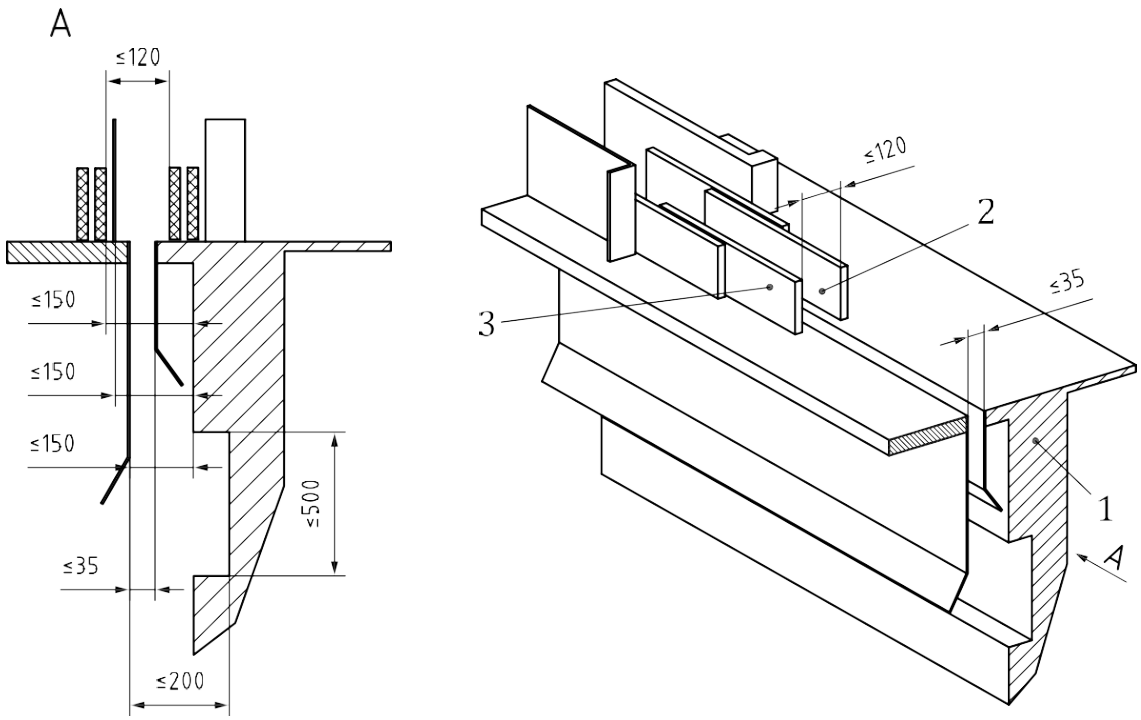

Key

1	lift well wall
2	landing door leading panel
3	car door leading panel

Fig. 3 Clearances Between Car and Wall Facing the Car Entrance

Free Standard provided by BIS via BSB Edge Private Limited to Akshay Chaudhary - Chennai(akshay.chdary@gmail.com) 136.238.2.51 [for non-commercial use only].

b) may be extended to 0.20 m throughout the travel on goods lifts in which the landing doors are vertically sliding;

c) is not limited if the car is provided with a mechanically locked door in accordance with **5.3.9.2**, which can only be opened in the unlocking zone of a landing door.

The operation of the lift shall automatically depend on the locking of the corresponding car door except in the cases covered in **5.12.1.4** and **5.12.1.8**. This locking shall be proved by an electric safety device in conformity with **5.11.2**.

5.2.5.3.2 Below each landing door sill, the wall of the well shall comply with the following requirements:

a) it shall form a vertical surface which is directly connected to the landing door sill, whose height is at least half the unlocking zone plus 50 mm and whose width is at least the clear opening of the car access plus 25 mm on both sides;

b) this surface shall be continuous and be composed of smooth and hard elements, such as metal sheets, and shall be capable of withstanding a force of 300 N applied at a right angle to the wall at any point, being evenly distributed over an area of 5 cm^2 in round or square section, it shall resist:

   1) without permanent deformation;

   2) without elastic deformation greater than 15 mm.

c) any projections shall not exceed 5 mm. Projections exceeding 2 mm shall be chamfered at least 75° to the horizontal. Furthermore, it shall be either:

   1) connected to the lintel of the next door; or

   2) extended downwards using a hard smooth chamfer whose angle to the horizontal plane shall be at least 60°. The projection to this chamfer on the horizontal plane shall not be less than 20 mm.

5.2.5.4 *Protection of any spaces located below the well*

If accessible spaces do exist below the well, the base of the pit shall be designed for an imposed load of at least 5 000 N/m^2, and the counterweight or the balancing weight shall be equipped with safety gear.

In addition, it is recommended to provide double slab for the lift pit.

5.2.5.5 *Protection in the well*

5.2.5.5.1 The travelling area of the counterweight or the balancing weight shall be guarded by means of a screen, which comply with the following:

a) if this screen is perforate, **4.2.4.1** of IS 16814 shall be respected;

b) this screen shall extend from the lowest point of the counterweight resting on its fully compressed buffer(s) or balancing weight in its lowest position to a minimum height of 2.0 m from the pit floor;

c) in no case shall it be more than 0.30 m from the pit floor to the lowest part of the screen. For buffers travelling with the counterweight, *see* **5.8.1.1**;

d) the width shall be at least equal to that of the counterweight or balancing weight;

e) if the gap between the counterweight/balancing weight guide rails and the well wall exceeds 0.30 m then this area shall also be guarded in accordance with b) and c);

f) the screen may have slot(s) with the minimum width necessary to permit free passage of compensation means or for the purpose of visual inspection;

g) the screen shall have sufficient rigidity to ensure that when a force of 300 N being evenly distributed over an area of 5 cm^2 in round or square section is applied at right angles at any point of the screen, it shall not deflect to cause the counterweight or balancing weight to collide with it;

h) the car and its associated components shall be at a distance of at least 50 mm from the counterweight or balancing weight (if there is one) and its associated components.

5.2.5.5.2 Where the well contains several lifts, there shall be a partition between the moving parts of different lifts.

If this partition is perforate, **4.2.4.1** of IS 16814 shall be respected.

The partition shall have sufficient rigidity to ensure that when a force of 300 N being evenly distributed over an area of 5 cm^2 in round or square section, is applied at right angles at any point of the partition, it shall not deflect to cause the moving parts to collide with it.

5.2.5.5.2.1 This partition shall extend from within 0.30 m from the pit floor to the full height of the well.

The width shall be sufficient as to prevent access from one pit to another.

Where the conditions of not giving access to a hazardous zone according to **5.2.3.3 d)** are met, then such a partition screen shall not be provided below the lowest point of travel of the car.

5.2.5.5.2.2 This partition shall be at least the width of the moving part and extend a further 0.10 m on each side throughout the height of the well.

5.2.5.6 *Guided travel of car, counterweight and balancing weight*

Free Standard provided by BIS via BSB Edge Private Limited to Akshay Chaudhary - Chennai(akshay.chdary@gmail.com) 136.238.2.51 [for non-commercial use only].

5.2.5.6.1 *Extreme position of car, counterweight and balancing weight*

5.2.5.6.1.1 The extreme positions of car, counterweight and balancing weight according to **Table 2** shall be considered for requirements on guided travel according to **5.2.5.6**, and refuge spaces and clearances according to **5.2.5.7** and **5.2.5.8**.

5.2.5.6.1.2 When for traction lifts the slowdown of the machine is monitored, in accordance with **5.12.1.3**, the value of 0.035 v^2, in **Table 2** may be reduced taking into account the speed at which the car or counterweight comes into contact with the buffer (*see* **5.8.2.2.2**).

5.2.5.6.1.3 For traction lifts which are fitted with compensation means having a tensioning pulley equipped with an anti-rebound device (braking or lock-down device), the value of 0.035 v^2 in **Table 2** may be replaced by a figure related to the possible travel of that pulley (depending on the roping used) plus 1/500 of the travel of the car, with a minimum of 0.20 m to take account of the elasticity of the ropes.

5.2.5.6.1.4 In the case of direct acting hydraulic lifts, the value of 0.035 v^2 mentioned in **Table 2** need not be taken into account.

5.2.5.6.2 *In the case of traction lifts*

When the car or counterweight is at its highest position according to **5.2.5.6.1**, its guide rail lengths shall be such as would accommodate a further guided travel of at least 0.10 m.

5.2.5.6.3 *In the case of positive drive lifts*

5.2.5.6.3.1 The guided travel of the car upwards from the top floor until it strikes the upper buffers shall be at least 0.50 m. The car shall be guided to the limit of its buffer stroke.

5.2.5.6.3.2 When the balancing weight, if there is one, is at its highest position according to **5.2.5.6.1**, its guide rail lengths shall be such as would accommodate a further guided travel of at least 0.30 m.

5.2.5.6.4 *In the case of hydraulic lifts*

5.2.5.6.4.1 When the car is at its highest position according to **5.2.5.6.1**, its guide rail lengths shall be such as would accommodate a further guided travel of at least 0.10 m.

5.2.5.6.4.2 When the balancing weight, if there is one, is at its highest position according to **5.2.5.6.1**, its guide rail lengths shall be such as would accommodate a further guided travel of at least 0.10 m.

5.2.5.6.4.3 With the balancing weight, if there is one, at its lowest position according to **5.2.5.6.1**, its guided length shall be such as would accommodate a further guided travel of at least 0.10 m.

5.2.5.7 *Refuge spaces on car roof and clearances in headroom*

5.2.5.7.1 When the car is at its highest position according to **5.2.5.6.1**, at least one clear area where a refuge space can be accommodated shall be provided on the car roof, selected from **Table 3**.

For type 2 refuge spaces, a reduction is allowed on one side at the lower edge where the refuge space touches the car roof. A reduction of 0.10 m wide by 0.30 m high may be included in order to accommodate parts fixed on the car roof (*see* **Fig. 4**).

Table 2 Extreme Positions of Car, Counterweight and Balancing Weight

(*Clauses* 5.2.5.6.1.1, 5.2.5.6.1.2, 5.2.5.6.1.3, 5.2.5.6.1.4 *and* 5.8.2.1.2.2)

Sl No.	Position	Traction Drives	Positive Drives	Hydraulic Drives
(1)	(2)	(3)	(4)	(5)
i)	Highest position of car	Counterweight on fully compressed buffer +0.035 v^2 [a]	Car on fully compressed upper buffer	Ram in its ultimate position achieved through the means of ram stroke limitation +0.035 v_m^2
ii)	Lowest position of car	Car on fully compressed buffer	Car on fully compressed lower buffer	Car on fully compressed buffer
iii)	Highest position of counterweight/balancing weight	Car on fully compressed buffer +0.035 v^2	Car on fully compressed lower buffer	Car on fully compressed buffer +0.035 v_d^2
iv)	Lowest position of counter-weight/balancing weight	Counterweight on fully compressed buffer	Car on fully compressed upper buffer	Ram in its ultimate position achieved through the means of ram stroke limitation +0.035 v_m^2

[a] 0.035 v^2 represents half the gravity stopping distance corresponding to 115 percent of the rated speed:

$$\frac{1}{2} \times \frac{(1.15 \times v)^2}{2 \times g_n} = 0.033\,7 \times v^2, \text{ rounded to } 0.035\ v^2.$$

Free Standard provided by BIS via BSB Edge Private Limited to Akshay Chaudhary - Chennai(akshay.chdary@gmail.com) 136.238.2.51 [for non-commercial use only].

If more than one person is necessary on the car roof for carrying out inspection and maintenance work, an additional refuge space shall be provided for each additional person.

In the case of more than one refuge space, they shall be of the same type and not interfering with each other.

Dimensions in millimetres

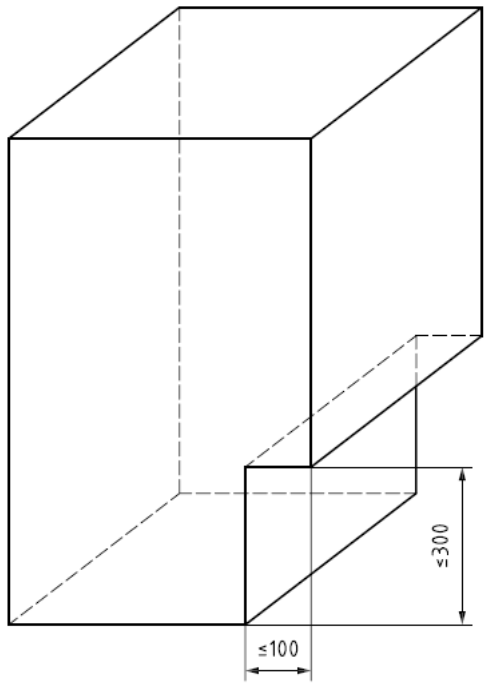

FIG. 4 MAXIMUM DIMENSIONS OF A REDUCTION IN THE REFUGE SPACE

A sign on the car roof readable from the landings giving access to the car roof shall clearly indicate the allowed number of persons and the type of posture (*see* **Table 3**) considered for the refuge space(s) accommodation.

Where a counterweight is used a sign shall be placed on or near the counterweight screen (*see* **5.2.5.5.1**) stating the maximum allowed clearances between the counterweight and the counterweight buffer when the car is at its upmost landing level in order to maintain the car headroom dimensions.

5.2.5.7.2 When the car is at its highest position according to **5.2.5.6.1**, the clear distance between the lowest parts of the ceiling of the well (including beams and parts situated under the ceiling) (*see* **Fig. 5**) and:

a) the highest pieces of equipment fixed on the roof, except for those covered in b) and c) below, shall be at least 0.50 m in any vertical or inclined direction within the projection of the car;

b) the highest part of the guide shoes or rollers, of the compensation means terminations and of the header or parts of vertically sliding doors, if any, shall be at least 0.10 m in any vertical direction within a horizontal distance of 0.40 m within the projection of the car;

c) the highest part of the balustrade shall be at least:

   1) 0.30 m within a horizontal distance of 0.40 m within the projection of the car and 0.10 m on the outside of the balustrade;

   2) 0.50 m in any inclined distance beyond 0.40 m within the projection of the car.

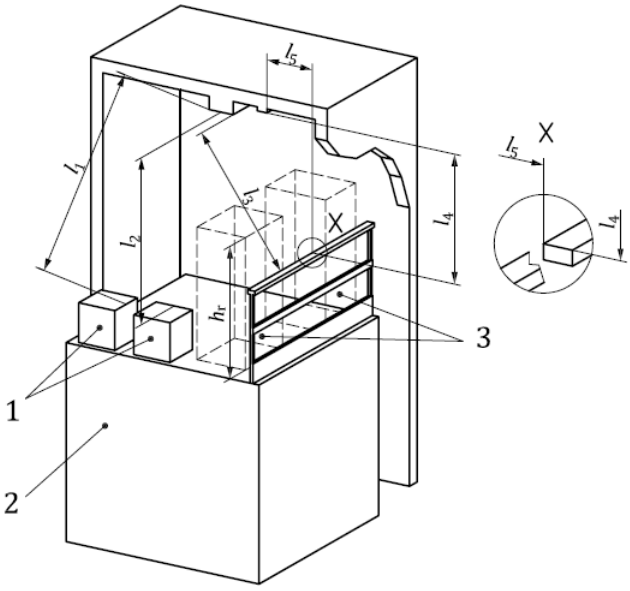

Key

l_1	distance ≥ 0.50 m [**5.2.5.7.2** a)]
l_2	distance ≥ 0.50 m [**5.2.5.7.2** a)]
l_3	distance ≥ 0.50 m [**5.2.5.7.2** c) 2)]
l_4	distance ≥ 0.30 m [**5.2.5.7.2** c) 1)]
l_5	distance ≤ 0.40 m [**5.2.5.7.2** c) 1)]
1	highest parts installed on the car roof
2	car
3	refuge space(s)
h_r	height of refuge spaces (**Table 3**)

FIG. 5 MINIMUM DISTANCES BETWEEN PARTS FIXED ON CAR ROOF AND LOWEST PARTS FIXED TO CEILING OF WELL

5.2.5.7.3 Any single continuous area on the car roof, or on equipment on the car roof, with a minimum clear area of 0.12 m^2 and the minimum dimension of the smallest side being greater than 0.25 m, is considered as a place where a person can stand. When the car is at its highest position according to **5.2.5.6.1**, the vertical clearance above any such area and the lowest parts of the ceiling of the well (including beams and parts

Free Standard provided by BIS via BSB Edge Private Limited to Akshay Chaudhary - Chennai(akshay.chdary@gmail.com) 136.238.2.51 [for non-commercial use only].

Table 3 Dimensions of Refuge Spaces in Headroom

(*Clauses* 5.2.5.7.1 *and* Fig. 5)

Sl No.	Type	Posture	Pictogram	Horizontal Dimensions of the Refuge Space m	Height of the Refuge Space m
(1)	(2)	(3)	(4)	(5)	(6)
i)	1	Upright		0.40 × 0.50	2.00
ii)	2	Crouching		0.50 × 0.70	1.00

NOTE — The overhead obstacle warning sign W020 as per IS 16451 is incorporated in these safety signs.

situated under the ceiling), shall be the height of the relevant refuge space(s) according to **5.2.5.7.1**.

5.2.5.7.4 The free vertical distance between the lowest parts of the ceiling of the well and the highest parts of an upward travelling ram-head assembly shall be at least 0.10 m.

5.2.5.8 *Refuge spaces and clearances in the pit*

5.2.5.8.1 When the car is at its lowest position according to **5.2.5.6.1**, at least one clear area where a refuge space can be accommodated shall be provided on the pit floor, selected from **Table 4**.

If more than one person is necessary in the pit to carry out inspection and maintenance work, an additional refuge space shall be provided for each additional person.

In the case of more than one refuge space, they shall be of the same type and not interfering with each other.

A sign in the pit readable from the entrance(s) shall clearly indicate the allowed number of persons and the type of posture (**Table 4**) considered for the refuge spaces(s) accommodation.

5.2.5.8.2 When the car is at the lowest position according to **5.2.5.6.1**, the following conditions shall be satisfied:

a) the free vertical distance between the bottom of the pit and the lowest parts of the car shall be at least 0.50 m. This distance may be reduced:

   1) for any part of the apron or parts of the vertically sliding car door(s) to a minimum of 0.10 m within a horizontal distance of 0.15 m to the adjacent wall(s);

Free Standard provided by BIS via BSB Edge Private Limited to Akshay Chaudhary - Chennai(akshay.chdary@gmail.com) 136.238.2.51 [for non-commercial use only].

Table 4 Dimensions of Refuge Spaces in the Pit

(*Clause* 5.2.5.8.1)

Sl No.	Type	Posture	Pictogram	Horizontal Dimensions of the Refuge Space m	Height of the Refuge Space m
(1)	(2)	(3)	(4)	(5)	(6)
i)	1	Upright		0.40 × 0.50	2.00
ii)	2	Crouching		0.50 × 0.70	1.00
iii)	3	Laying		0.70 × 1.00	0.50

(*see* Note 2 below)

NOTES

1 The overhead obstacle warning sign W020 as per IS 16451 is incorporated in these safety signs.

2 Read 0,5 m in Row iii) Col (4) above as 0.5 m.

Free Standard provided by BIS via BSB Edge Private Limited to Akshay Chaudhary - Chennai(akshay.chdary@gmail.com) 136.238.2.51 [for non-commercial use only].

2) for car frame parts, safety gears, guide shoes, pawl devices, within a maximum horizontal distance from the guide rails according to **Fig. 6** and **Fig. 7**.

b) the free vertical distance between the highest parts fixed in the pit, for instance a tensioning device for compensation means being in its highest position, jack supports, pipes and other fittings, and the lowest parts of the car, except for items detailed in **5.2.5.8.2 a) 1)** and **2)**, shall be at least 0.30 m;

c) the free vertical distance between the bottom of the pit or the top of equipment installed there and the lowest parts of the downwards-travelling ram-head assembly of an inverted jack shall be at least 0.50 m.

However, if it is impossible to gain involuntary access under the ram head assembly (for example, by providing screens in accordance with **5.2.5.5.1**), this vertical distance may be reduced from 0.50 m to 0.10 m minimum;

d) the free vertical distance between the bottom of the pit and the lowest guiding yoke of a telescopic jack below the car of a direct acting lift shall be at least 0.50 m.

5.2.6 *Machinery Spaces and Pulley Rooms*

5.2.6.1 *General provisions*

The spaces and the associated working areas for maintenance/inspection work and emergency operation shall be suitably protected against environmental influences. *See* **0.3.3**, **0.4.2** and **0.4.5**.

5.2.6.2 *Notices and instructions*

5.2.6.2.1 Notices shall be provided to permit easy identification of the main switch(es) and the light switch(es).

5.2.6.2.2 If, after release of a main switch, some parts remain live (interconnection between lifts, lighting, etc.) notice (s) shall indicate this.

5.2.6.2.3 In the machine room (**5.2.6.3**), the machinery cabinet (**5.2.6.5.1**) or at the emergency and tests panel(s) (**5.2.6.6**), there shall be detailed instructions [*see* **7.2.2 g)**, **h)** and **j)**] to be followed in the event of lift breakdown, particularly concerning the use of the device for rescue operations and the emergency unlocking key for landing doors.

5.2.6.3 *Machinery in a machine room*

5.2.6.3.1 *Traction sheave in the well*

The traction sheave may be installed in the well, provided that:

a) the examinations and the tests and the maintenance operations are able to be carried out from the machine room;

b) the openings between the machine room and the well are as small as possible.

5.2.6.3.2 *Dimensions*

5.2.6.3.2.1 The dimensions of machine rooms shall be sufficient to permit easy and safe working on equipment.

A clear height of at least 2.10 m at working areas shall be provided, and:

a) a clear horizontal area in front of the control panels and cabinets. This area is defined as follows:

1) depth, measured from the external surface of the enclosures, at least 0.70 m;

2) width, the greater of the following values: 0.50 m or the full width of the cabinet or panel.

b) a clear horizontal area of at least 0.50 m × 0.60 m for maintenance and inspection of moving parts at points where this is necessary and, if need be, manual emergency operation (*see* **5.9.2.3.1**).

5.2.6.3.2.2 The clear height for movement shall not be less than 1.80 m.

The access ways to the clear spaces mentioned in **5.2.6.3.2.1** shall have a width of at least 0.50 m. This value may be reduced to 0.40 m where there are no moving parts or hot surfaces, as defined in **5.10.1.1.6**.

This clear height for movement is taken to the underside of the lowest striking point and measured from the floor of the access area.

5.2.6.3.2.3 There shall be a clear vertical distance of at least 0.30 m above unprotected rotating parts of the machine.

5.2.6.3.2.4 When the machine room floor comprises a number of levels differing by more than 0.50 m, fixed ladders according to **5.2.2.5** or stairways and guardrails shall be provided.

5.2.6.3.2.5 When the floor of the machine rooms has any recesses with a depth of more than 0.05 m and a width between 0.05 m and 0.50 m wide, or any ducts, they shall be covered. This applies only to areas where a person may work or move between different working areas.

Recesses with a width of more than 0.50 m shall be considered as different levels, *see* **5.2.6.3.2.4**.

5.2.6.3.3 *Other openings*

The dimension of holes in the slab and room floor shall be reduced to a minimum for their purpose.

With the aim of removing the danger of objects falling through openings situated above the well, including those for electric cables, ferrules shall be used, which project at least 50 mm above the slab or finished floor.

Free Standard provided by BIS via BSB Edge Private Limited to Akshay Chaudhary - Chennai(akshay.chdary@gmail.com) 136.238.2.51 [for non-commercial use only].

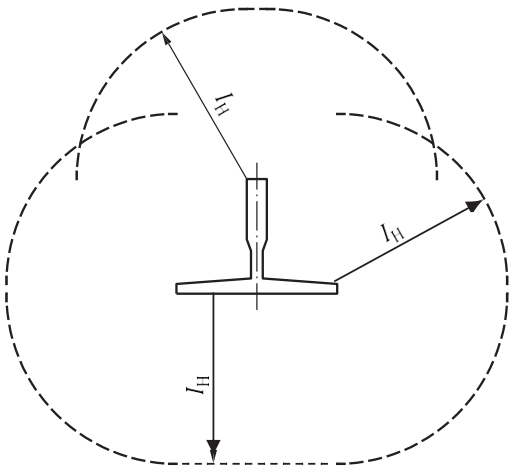

Key

I_H horizontal distance around guide rail

Fig. 6 Horizontal Distance Around Guide Rail

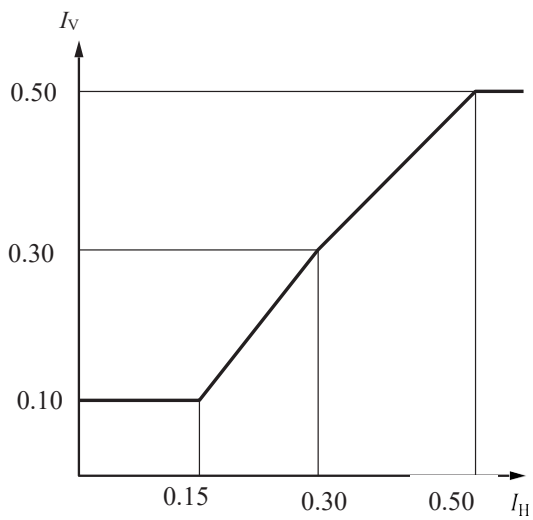

Key

I_V minimum vertical distance

I_H horizontal distance X_H [m]

Fig. 7 Minimum Vertical Distances for Car Frame Parts, Safety Gear, Guide Shoes and Pawl Devices

5.2.6.4 *Machinery inside the well*

5.2.6.4.1 *General provisions*

5.2.6.4.1.1 In the case of wells partially enclosed at the exterior of buildings, the machinery shall be suitably protected against environmental influences.

5.2.6.4.1.2 The clear height for moving inside the well from one working area to another one shall not be less than 1.80 m.

5.2.6.4.1.3 In the case of:

a) a retractable platform (**5.2.6.4.5**) and/or movable stops [**5.2.6.4.5.2 b)**]; or

Free Standard provided by BIS via BSB Edge Private Limited to Akshay Chaudhary - Chennai(akshay.chdary@gmail.com) 136.238.2.51 [for non-commercial use only].

b) manually operated mechanical device (**5.2.6.4.3.1**, **5.2.6.4.4.1**).

a clear notice(s) giving all the necessary instructions for operation shall be affixed at an appropriate place(s) in the well.

5.2.6.4.2 *Dimensions of working areas inside the well*

5.2.6.4.2.1 The dimensions of working areas at the machinery shall be sufficient to permit easy and safe working on equipment.

A clear height of at least 2.10 m at working areas shall be provided, and:

a) a clear horizontal space in front of the control panels and cabinets. This area is defined as follows:
   1) depth, measured from the external surface of the enclosures, at least 0.70 m;
   2) width, the greater of the following values: 0.50 m or the full width of the cabinet or panel.
b) a clear horizontal area of at least 0.50 m × 0.60 m for maintenance and inspection of parts at points where this is necessary.

5.2.6.4.2.2 There shall be a clear vertical distance of at least 0.30 m above unprotected rotating parts of the machine.

5.2.6.4.3 *Working areas on the car roof*

5.2.6.4.3.1 Where maintenance/inspection work on the machinery is to be carried out from the car roof, and if any kind of uncontrolled or unexpected car movement resulting from maintenance/inspection can be dangerous to persons, the following applies:

a) any dangerous movement of the car shall be prevented by a mechanical device;
b) all movement of the car shall be prevented by means of an electric safety device in conformity with **5.11.2** unless the mechanical device is in its inactive position;
c) when this mechanical device is in its active position and cannot be disengaged due to forces exerted on it; it shall be possible to leave the well:
   1) *via* the landing door by a clear opening of at least 0.50 m × 0.70 m above the car door header/door drive; or
   2) This sub clause number has not been used.
   3) *via* an emergency door as described in **5.2.3**.

Instructions regarding the escape procedure shall be given in the lift documentation.

5.2.6.4.3.2 The necessary devices for emergency operation and for dynamic tests shall be arranged so that they can be carried out from outside of the well in accordance with **5.2.6.6**.

5.2.6.4.3.3 This clause number has not been used.

5.2.6.4.3.4 This clause number has not been used.

5.2.6.4.4 *Working areas in the pit*

5.2.6.4.4.1 Where machinery is to be maintained or inspected from the pit, and if any kind of uncontrolled or unexpected car movement resulting from maintenance/inspection can be dangerous to persons, the following applies:

a) a permanently installed device shall be provided to mechanically stop the car with any load up to rated load and from any speed up to rated speed to create a free distance of at least 2 m between the floor of the working area and the lowest parts of the car, excluding those mentioned in **5.2.5.8.2 a) 1)** and **2)**. The retardation of the car by mechanical devices other than safety gears shall not exceed that produced by the buffers (*see* **5.8.2**);
b) the mechanical device shall be able to maintain the car stopped;
c) the mechanical device can be operated manually or automatically;
d) the opening by the use of a key of any door providing access to the pit shall be checked by an electric safety device according to **5.11.2**, which prevents all further movement of the lift. Movement shall only be possible under the requirements given in f) below;
e) all movement of the car shall be prevented by means of an electric safety device in conformity with **5.11.2** unless the mechanical device is in its inactive position;
f) when the mechanical device is in its active position as checked by means of an electric safety device in conformity with **5.11.2**, electrically driven movement of the car shall only be possible from the inspection control station(s);
g) the return of the lift to normal operation shall only be made by operation of an electrical reset device placed outside of the well and accessible to authorized persons only, for example, inside a locked cabinet.

5.2.6.4.4.2 When the car is in the position according to **5.2.6.4.4.1 a)**, it shall be possible to leave the pit either:

a) through a vertical gap from the landing door level to the lowest edge of the car apron of at least 0.50 m; or
b) through an access door to the pit.

5.2.6.4.4.3 The necessary devices for emergency operation and for dynamic tests shall be arranged so that they can be carried out from outside of the well in accordance with **5.2.6.6**.

Free Standard provided by BIS via BSB Edge Private Limited to Akshay Chaudhary - Chennai(akshay.chdary@gmail.com) 136.238.2.51 [for non-commercial use only].

5.2.6.4.5 *Working areas on a platform*

5.2.6.4.5.1 Where machinery is to be maintained or inspected from a platform, it shall be:

a) permanently installed;

b) retractable if it is in the travel path of the car or counterweight/balancing weight.

5.2.6.4.5.2 Where machinery is to be maintained or inspected from a platform positioned into the travel path of the car, the counterweight or the balancing weight:

a) the car shall be stationary by using a mechanical device in conformity with **5.2.6.4.3.1 a)** and **b)**; or

b) where the car needs to be moved, the travel path of the car shall be limited by movable stops in such a way that:

   1) the car is stopped at least 2 m above the platform if the car runs down with rated speed towards the platform;

   2) the car is stopped below the platform in compliance with **5.2.5.7.2**, if the car runs up with rated speed towards the platform.

   3) the counterweight or balancing weight is stopped at least 2 m above/below platform if the counterweight or balancing weight runs down/up respectively, with rated speed towards the platform.

5.2.6.4.5.3 The platform shall be:

a) able to support at any position the mass of two persons, each counting for 1 000 N over an area of 0.20 m × 0.20 m without permanent deformation. If the platform is intended to be used for handling heavy equipment, the dimensions shall be considered accordingly, and the platform shall have a mechanical strength to withstand the loads and forces to which it is intended to be subjected (*see* **5.2.1.7**). The maximum permissible load shall be indicated on the platform;

b) provided with a balustrade in conformity with **5.4.7.4**;

c) equipped with means ensuring that:

   1) the step rise between the floor of the platform and the level of the access does not exceed 0.50 m;

   2) it shall not be possible to pass a ball with a diameter of 0.15 m through any gap between the platform and the sill of the access door.

5.2.6.4.5.4 In addition to **5.2.6.4.5.3**, any retractable platform shall be provided with:

a) an electric safety device in conformity with **5.11.2**, checking the fully retracted position;

b) means for putting it into or removing it from the working position. This operation shall be possible from the pit or by means located outside of the well and accessible only to authorized persons. The manual effort for operation of the platform shall not exceed 250 N;

c) if the access to the platform is not through a landing door, the opening of the access door shall be impossible when the platform is not in the working position, or alternatively, means shall be provided to prevent persons from falling into the well.

5.2.6.4.5.5 In the case of **5.2.6.4.5.2 b)**, movable stops shall be automatically operated when the platform is lowered. They shall be provided with:

a) buffers in conformity with **5.8**;

b) an electric safety device in conformity with **5.11.2**, which only allows car movement if the stops are in their fully retracted position;

c) an electric safety device in conformity with **5.11.2**, which only allows car movement with a lowered platform if the stops are in their fully extended position.

5.2.6.4.5.6 Where it is necessary to move the car from the platform, an inspection control station according to **5.12.1.5** shall be available for use on the platform.

When the movable stop(s) is(are) in its active position, electrically driven movement of the car shall only be possible from the inspection control station(s).

5.2.6.4.5.7 The necessary devices for emergency operation and dynamic tests shall be arranged so that they can be carried out from outside of the well in conformity with **5.2.6.6**.

5.2.6.4.5.8 The maximum permissible load shall be indicated on the platform.

5.2.6.4.6 *Working areas outside of the well*

When the machinery is in the well and is intended to be maintained/inspected from outside of the well, the working areas in accordance with **5.2.6.3.2.1** and **5.2.6.3.2.2** may be provided outside of the well. Access to this equipment shall only be possible by an inspection door in conformity with **5.2.3**.

5.2.6.5 *Machinery outside of the well*

5.2.6.5.1 *Machinery cabinet*

5.2.6.5.1.1 The machinery of a lift shall be located inside a cabinet which shall not be used for purposes other than the lift. It shall not contain ducts, cables or devices other than for the lift.

Free Standard provided by BIS via BSB Edge Private Limited to Akshay Chaudhary - Chennai(akshay.chdary@gmail.com) 136.238.2.51 [for non-commercial use only].

5.2.6.5.1.2 The machinery cabinet shall consist of imperforate walls, floor, roof and door(s). The only permissible openings are:

a) ventilation openings;
b) necessary openings for the functioning of the lift between the well and the machinery cabinet;
c) vent openings for escape of gases and smoke in the event of fire.

These openings when accessible to non-authorized persons shall comply with the following requirements:

1) protection according to Table 5 of IS 16814 against contact with danger zones;
2) degree of protection of at least IP2XD to IS/IEC 60529 against contact with electrical equipment.

5.2.6.5.1.3 The door(s) shall:

a) have sufficient dimensions to carry out the required work through the open door;
b) not open towards the inside of the cabinet;
c) be provided with a key-operated lock, capable of being reclosed and relocked without a key.

5.2.6.5.2 *Working area*

The working area in front of a machinery cabinet shall comply with the requirements according to **5.2.6.4.2**.

5.2.6.6 *Devices for emergency and test operations*

5.2.6.6.1 In the case of **5.2.6.4.3**, **5.2.6.4.4** and **5.2.6.4.5**, the necessary devices for emergency and test operations shall be provided on a panel(s) suitable for carrying out from outside of the well all emergency operations and dynamic tests of the lift such as tests of traction, safety gear, buffer, ascending car overspeed protection means, unintended car movement protection, rupture valve, restrictor, pawl device, cushioned stop and pressure. The panel(s) shall be accessible to authorized persons only.

If the emergency and test devices are not protected inside a machinery cabinet, they shall be enclosed with a suitable cover, which:

a) does not open towards the inside of the well;
b) is provided with a key-operated lock, capable of being reclosed and relocked without a key.

5.2.6.6.2 The panel(s) shall provide the following:

a) emergency operation devices according to **5.9.2.2.2.7** and **5.9.2.3** or **5.9.3.9**, together with an intercom system in conformity with **5.12.3.2**;
b) control equipment which enables dynamic tests to be carried out;
c) direct observation of the lift machine or display device(s), which gives indication of the:
   1) direction of movements of the car;
   2) reaching of an unlocking zone;
   3) speed of the car.

5.2.6.6.3 The devices on the panel(s) shall be lit by a permanently installed electric lighting with an intensity of at least 200 lux measured at the device.

A switch placed on, or close to, the panel shall control lighting of the panel(s). The electrical supply for this lighting shall be in conformity with **5.10.7.1**.

5.2.6.6.4 There shall be working areas according to **5.2.6.3.2.1** in front of emergency and test panels.

5.2.6.7 *Construction and equipment of pulley rooms*

5.2.6.7.1 *Dimensions*

5.2.6.7.1.1 Pulley room dimensions shall be sufficient to provide easy and safe access for authorized persons to all the equipment.

In particular:

a) the clear height for movement shall not be less than 1.50 m.

   This clear height for movement is taken to the underside of the lowest striking point and measured from the floor of the access area;
b) a clear horizontal area shall be provided, of at least 0.50 m × 0.60 m, for maintenance and inspection of moving parts at points where it is necessary.

The access ways to these areas shall have a width of at least 0.50 m. This value may be reduced to 0.40 m where there are no moving parts or hot surfaces, as defined in **5.10.1.1.6**.

5.2.6.7.1.2 There shall be a clear vertical distance of at least 0.30 m high above unprotected pulleys.

5.2.6.7.2 *Openings*

The dimensions of holes in the slab and pulley room floor shall be reduced to a minimum for their purpose.

With the aim of removing the danger of objects falling through openings situated over the well, including those for electric cables, ferrules shall be used which project at least 50 mm above the slab or finished floor.

5.3 Landing Doors and Car Doors

5.3.1 *General Provisions*

5.3.1.1 The openings in the well giving normal access to the car shall be provided with landing doors and the access to the car shall be through a car door.

Free Standard provided by BIS via BSB Edge Private Limited to Akshay Chaudhary - Chennai(akshay.chdary@gmail.com) 136.238.2.51 [for non-commercial use only].

5.3.1.2 The doors shall be imperforate.

5.3.1.3 When closed, the landing and car doors shall, apart from the necessary clearances, completely close the landing and car entrances.

5.3.1.4 When closed, the clearance between door panels, or between panels and uprights, lintels or sills, shall not exceed 6 mm. This value, due to wear, may reach 10 mm, with the exception of doors made from glass [*see* **5.3.6.2.2.1 j) 3)**]. These clearances are measured at the back of recesses, if present.

5.3.1.5 This clause number has not been used.

5.3.2 *Height and Width of Entrances*

5.3.2.1 *Height*

Landing doors and car doors shall be such that a minimum clear height of the entrance is 2 m.

5.3.2.2 *Width*

The clear entrance of the landing doors shall not extend more than 50 mm in width beyond the clear car entrance on both sides.

Minimum clear width of the entrance shall be 700 mm.

5.3.3 *Sills, Guides, Door Suspension*

5.3.3.1 *Sills*

Every landing and car entrance shall incorporate a sill of sufficient strength (*see* **5.7.2.3.6**) to withstand the passage of loads being introduced into the car.

NOTE — A slight counter slope provided in front of each landing sill helps to avoid water from washing, sprinklers, etc., draining into the well.

5.3.3.2 *Guides*

5.3.3.2.1 Landing and car doors shall be designed to prevent, during normal operation, derailment, mechanical jamming, or displacement.

5.3.3.2.2 Horizontally sliding landing and car doors shall be guided top and bottom.

5.3.3.2.3 Vertically sliding landing and car doors shall be guided at both sides.

5.3.3.3 *Suspension of vertically sliding doors*

5.3.3.3.1 Panels of vertically sliding landing and car doors shall be fixed to two independent suspension elements.

The failure of one suspension element shall by design not permit a panel to fall or means shall be provided to prevent the panel from falling if one suspension element fails.

In the event of a failure of at least one suspension element, the door shall not operate further.

5.3.3.3.2 Suspension ropes, chains shall be designed with a safety factor of at least 8.

5.3.3.3.3 The pitch diameter of suspension rope pulleys shall be at least 25 times the rope diameter.

5.3.3.3.4 Suspension ropes and chains shall be guarded against leaving the pulley grooves or sprockets.

5.3.4 *Horizontal Door Clearances*

5.3.4.1 The horizontal distance between the sill of the car and sill of the landing doors shall not exceed 35 mm (*see* **Fig. 3**).

5.3.4.2 The horizontal distance giving access to the well between the leading edges of the car door and the landing doors during the whole of their normal operation shall not exceed 0.12 m (*see* **Fig. 3**).

Where additional building doors are added in front of the landing door, the trapping of persons in the space between should be avoided (*see* also **5.2.2.1** and **5.2.2.3**). Minimum space shall be provided between landing door and building door such that it is sufficient enough to accommodate atleast the number of persons equal to the rated capacity of that lift, with enough ventilation and communication means.

5.3.4.3 In the case of the combination of:

a) a hinged landing door and a folding car door (*see* **Fig. 8**);
b) a hinged landing door and a horizontal sliding car door (*see* **Fig. 9**);
c) horizontal sliding car and landing doors, which are not mechanically coupled (*see* **Fig. 10**);

it shall not be possible to place a ball with a diameter of 0.15 m according to **Fig. 8**, **Fig. 9** or **Fig. 10** respectively in any gap between the closed doors.

5.3.5 *Strength of Landings and Car Doors*

5.3.5.1 *General*

Components shall be made of material that maintains the strength property over their intended lifetime under the environmental conditions.

5.3.5.2 *Behavior under fire conditions*

Landing doors shall comply with the National Building Code of India, SP 7 requirements relevant to the fire protection for the building concerned. Refer to **5.12.5**. IS 17518 (Part 2) shall be applied for the testing of such doors.

Free Standard provided by BIS via BSB Edge Private Limited to Akshay Chaudhary - Chennai(akshay.chdary@gmail.com) 136.238.2.51 [for non-commercial use only].

Dimensions in millimetres

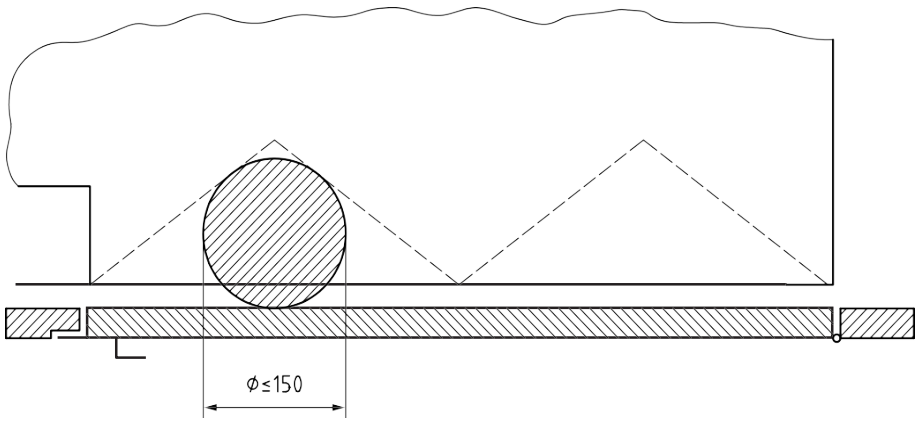

Fig. 8 Hinged Landing Door and Folding Car Door

Dimensions in millimetres

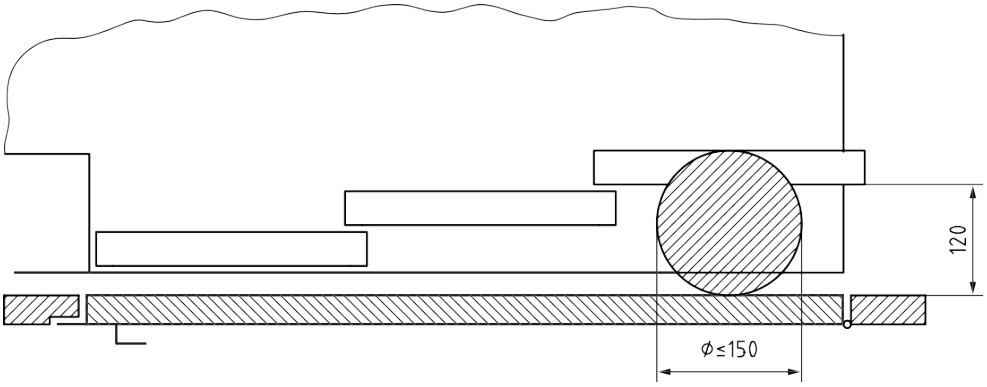

Fig. 9 Hinged Landing Door and Horizontal Sliding Car Door

Dimensions in millimetres

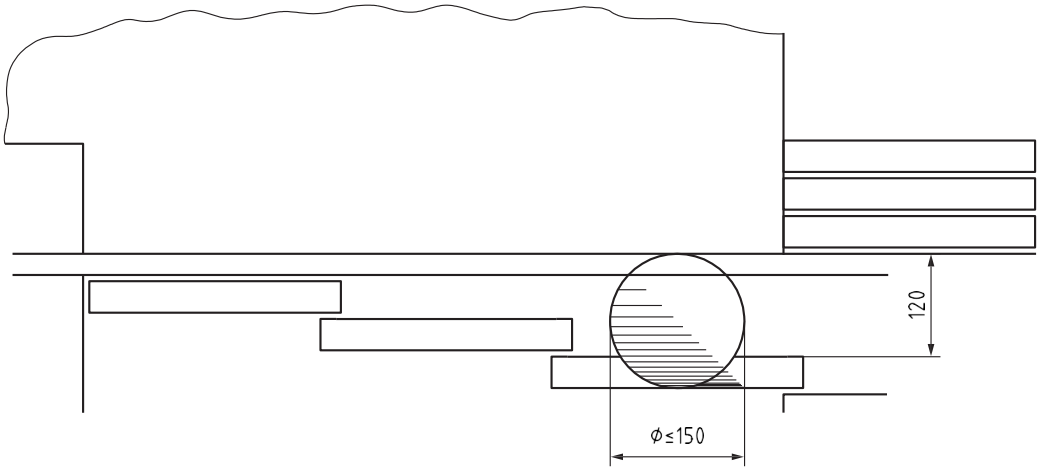

Fig. 10 Horizontal Sliding Car and Landing Doors, Not Mechanically Coupled

NOTE — **Fig. 10** is also applicable for the "car door closed and landing door open" situation.

Free Standard provided by BIS via BSB Edge Private Limited to Akshay Chaudhary - Chennai(akshay.chdary@gmail.com) 136.238.2.51 [for non-commercial use only].

5.3.5.3 *Mechanical strength*

5.3.5.3.1 Complete landing doors, with their locks, and car doors shall have a mechanical strength such that in the locked position of landing doors and closed position of car doors:

a) when a static force of 300 N, being evenly distributed over an area of 5 cm^2 in round or square section, is applied at right angles to the panel/frame at any point on either face, they shall resist without:

   1) permanent deformation greater than 1 mm;

   2) elastic deformation greater than 15 mm.

   After such a test, the safety function of the door shall not be affected.

b) when a static force of 1 000 N, being evenly distributed over an area of 100 cm^2 in round or square section, is applied at right angles at any point of the panel or frame from the landing side for landing doors, or from the inside of the car for car doors, they shall resist without significant permanent deformation affecting functionality and safety [*see* **5.3.1.4** (maximum clearance 10 mm) and **5.3.9.1**].

   For glass doors, *see* **5.3.6.2.2.1 j) 3)**.

   NOTE — For a) and b), the probe surface used to apply the test forces can be of soft material to avoid damage to the door coating.

5.3.5.3.2 Horizontal sliding landing and car doors shall be provided with devices for retaining the door panel(s) in position should the guiding element fixed to the door panel fail. All door panels with these devices installed in their complete door assembly shall withstand a pendulum shock test as specified in **5.3.5.3.4 a)** at striking points according to **Table 5** and **Fig. 11** under the worst possible failure conditions of the normal guiding elements.

Retainer should be understood as a mechanical means preventing the door panels from leaving their guides which may be either an additional component or part of the panel/hanger.

5.3.5.3.3 Under the application of a manual force of 150 N in the direction of the opening of the leading landing door panel(s) of horizontally sliding doors and folding doors, at the most unfavourable point, the clearances defined in **5.3.1** may exceed 6 mm, but they shall not exceed:

a) 30 mm for side opening doors;

b) 45 mm in total for centre opening doors.

5.3.5.3.4 In addition, for:

a) landing doors with glass panels;

b) car doors with glass panels;

c) side frames of landing doors that are wider than 150 mm;

the following shall be fulfilled (*see* **Fig. 11**):

Where additional panels to the side of the door frame are used to enclose the well, they should be considered as side frames.

a) when an impact energy equivalent to a falling height of 800 mm of the soft pendulum shock device [*see* **5.14** of IS 17900 (Part 2)] is striking the glass panels or side frames in the middle of the panel or frame width, at striking points according to **Table 5**, from the landing side or from the inside of the car, the following shall be satisfied:

   1) they may have permanent deformation;

   2) there shall be no loss of integrity of the door assembly. The door assembly shall remain in place with no gaps greater than 0.12 m into the well;

   3) after the pendulum test, the doors do not need to be able to operate;

   4) for glass elements, there shall be no cracks.

b) when an impact energy equivalent to a falling height of 500 mm of the hard pendulum shock device (*see* **5.14** of IS 17900 (Part 2)) is applied on glass panels bigger than stated in **5.3.7.2.1 a)**, striking in the middle of the door panels or glass panels in frames at striking points from the landing side or from the inside of the car according to Table 5, there shall be:

   1) no cracks;

   2) no damage on the surface of the glass except chips of 2 mm maximum in diameter.

   NOTE — In the case of multiple glass panels, the weakest configuration of the panels can be taken into account.

The worst case shall be tested. If it is not possible to determine the worst case, both or all variants shall be tested.

5.3.5.3.5 Doors/frames with glass shall use laminated glass.

5.3.5.3.6 The fixing of the glass in doors shall ensure that the glass cannot slip out of the fixings, even when sinking.

5.3.5.3.7 The glass panels shall have markings giving the following information:

a) name of the supplier and trade mark;

b) type of glass;

c) thickness (for example, 8/8/0.76 mm).

Free Standard provided by BIS via BSB Edge Private Limited to Akshay Chaudhary - Chennai(akshay.chdary@gmail.com) 136.238.2.51 [for non-commercial use only].

Table 5 Striking Points

(*Clauses* 5.3.5.3.2 and 5.3.5.3.4)

Sl No.	Pendulum Shock Test	Soft Pendulum		Hard Pendulum	
(1)	(2)	(3)		(4)	
i)	Dropping height	800 mm	800 mm	500 mm	500 mm
ii)	Striking point height	1.0 m ± 0.10 m	Centre of glass	1.0 m ± 0.10 m	Centre of glass
iii)	Door without glass panel (**Fig. 11** a)	X			
iv)	Door with small glass panel (**Fig. 11** b)	X	X		X
v)	Door with more than one glass panel (**Fig. 11** c) Tests on whichever glass panel represent the worst case	X	X		X
vi)	Door with big glass panel or full glass (**Fig. 11** d)	X (Impact on glass)		X (Impact on glass)	
vii)	Door with glass panel starting or ending at about 1 m height (**Fig. 11** e)	X	X		X
viii)	Door with glass panel starting or ending at about 1 m height (**Fig. 11** f)	X (Impact on glass)		X (Impact on glass)	
ix)	Side frames >150 mm (**Fig. 11** g)	X			
x)	Door with vision panel (**5.3.7.2**)	X	X		

5.3.6 *Protection in Relation to Door Operation*

5.3.6.1 *General*

The doors and their surrounds shall be designed in such a way as to minimize risk of damage or injury due to jamming of a part of a person, clothing or other object.

To avoid the risk of shearing during operation, the face of automatic power-operated sliding doors, from the landing and from inside the car shall not have recesses or projections exceeding 3 mm. The edges of these shall be chamfered in the opening direction of movement.

Exception to these requirements is also made for the access to the unlocking triangle defined in **5.3.9.3**.

5.3.6.2 *Power-operated doors*

5.3.6.2.1 *General*

In the case of coupled car and landing doors operated simultaneously, the following requirements are valid for the joint door mechanism.

5.3.6.2.2 *Horizontally sliding doors*

5.3.6.2.2.1 *Automatic power-operated doors*

The following applies:

a) the kinetic energy of the landing and/or car door and the mechanical elements which are rigidly connected to it, calculated or measured at the average closing speed shall not exceed 10 J.

   The average closing speed of a sliding door is calculated over its whole travel, less:

   1) 25 mm at each end of the travel in the case of centrally closing doors;
   2) 50 mm at each end of the travel in the case of side closing doors.

b) a protective device shall automatically initiate re-opening of the door(s) in the event of a person crossing the entrance during the closing movement. The protective device may be rendered inoperative in the last 20 mm of door closing gap;

   1) the protective device (for example, light curtain) shall cover the opening over the distance between at least 25 mm and 1 600 mm above the car door sill;
   2) the protective device shall be capable of detecting obstacles with a minimum diameter of 50 mm;
   3) to counteract persistent obstructions when closing the door, the protective device may be de-activated after a predetermined time;
   4) in case of failure, or deactivation of the protective device, the kinetic energy of the doors shall be limited to 4 J, if the lift is kept in operation, and an acoustic signal shall operate at any time the door(s) is (are) closing.

NOTE — The protective device of the car door and the landing doors can be the same.

Free Standard provided by BIS via BSB Edge Private Limited to Akshay Chaudhary - Chennai(akshay.chdary@gmail.com) 136.238.2.51 [for non-commercial use only].

Dimensions in millimetres

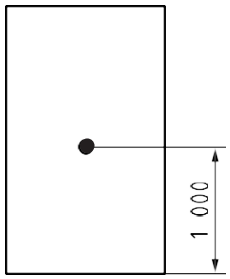

a) Door panel without glass panel

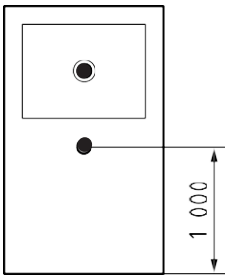

b) Door panel with glass panel

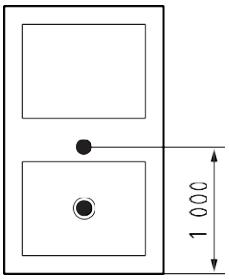

c) Door panel with more than one glass panel

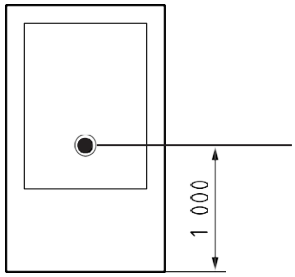

d) Door panel with glass panel or full glass

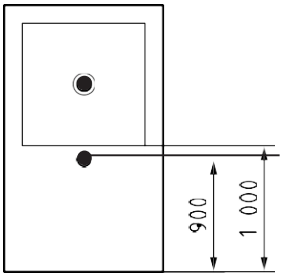

e) Door panel with glass panel above 1.0 m

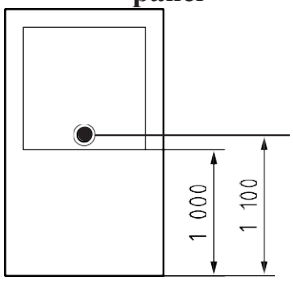

f) Door panel with glass panel above 1.0 m

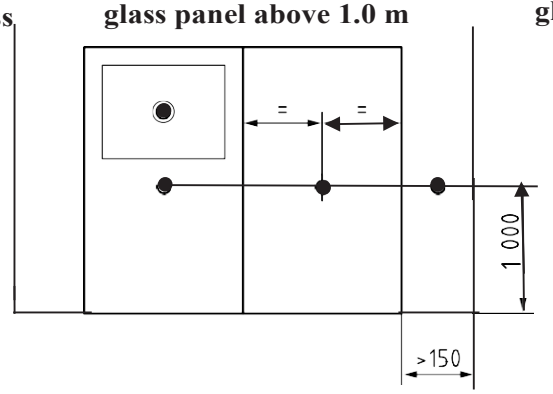

g) Complete landing door with door panels and side frames [example according to a) and b)]

Key

● striking point for soft pendulum shock test

○ striking point for hard pendulum shock test

NOTES

1 Fig. 11 e) and f) are alternative solutions.

2 For striking points defined by 1 m, the tolerance is ±0.10 m.

FIG. 11 DOOR PANELS — PENDULUM SHOCK TESTS — STRIKING POINTS

Free Standard provided by BIS via BSB Edge Private Limited to Akshay Chaudhary - Chennai(akshay.chdary@gmail.com) 136.238.2.51 [for non-commercial use only].

c) the effort needed to prevent the door from closing shall not exceed 150 N, excluding the first third of the travel of the door;

d) the prevention of the door closing shall initiate a re-opening of the door;

Re-opening does not imply that the door shall open fully, but some reopening shall occur to allow an obstacle to be removed;

e) the effort needed to prevent a folding door from opening shall not exceed 150 N. This measurement shall be made with the door collapsed such that the adjacent outer edges of the folded panels or equivalent, for example, door frame, are at a distance of 100 mm;

f) if a folding car door is going into a recess, the distance between any outer edge of the door fold and the recess shall be at least 15 mm;

g) if labyrinths or chicanes are used (for example, limitation of fire transmission) on the front edges of leading door panels, or on the combination of leading door edge and fixed jamb, recesses and protrusions shall not exceed 25 mm.

In the case of glass doors, the thickness of the front edge of the leading panel(s) shall not be less than 20 mm. The edges of the glass shall be ground in order not to cause injury;

h) doors made from glass, with the exception of vision panels to **5.3.7.2.1 a)**, shall be provided with means to limit the opening force to 150 N and to stop the door in the event of an obstruction. Vision panels shall not be provided on power operated doors. However manually operated vertical sliding, horizontally sliding or swing type doors may be provided with a vision panel, in conformity with **5.3.7.2.1 a)** and **5.3.7.2.2**;

j) to avoid dragging of children hands, automatic power-operated horizontally sliding doors made of glass of dimensions greater than stated in **5.3.7.2** shall be provided with means to minimize the risk, by:

1) making the glass opaque on the side exposed to the user by the use of either frosted glass or the application of frosted material to a height of minimum 1.10 m, or

2) sensing the presence of fingers at least up to 1.60 m above sill and stopping the door movement in opening direction, or

3) limiting the gap between door panels and frame to maximum 4 mm, at least up to a minimum of 1.60 m above sill. This value due to wear may reach 5 mm.

Recesses (framed glass, etc.) shall not exceed 1 mm and shall be included in the 4 mm gap. The maximum radius on the outer edge of the frame adjacent to the door panel shall not be more than 4 mm.

5.3.6.2.2.2 *Non-automatic power-operated doors*

When the closing of the door is carried out under the continuous control and supervision of the user, by continuous pressure on a button or similar (hold-to-run control), the average closing speed of the fastest panel shall be limited to 0.30 m/s, when the kinetic energy, calculated or measured as stated in **5.3.6.2.2.1 a)**, exceeds 10 J.

5.3.6.2.2.3 *Vertically sliding doors*

This type of sliding door shall only be used for goods lifts.

Power closing shall only be used if the following five conditions are fulfilled at the same time:

a) the closing is carried out under the continuous control and supervision of the users, for example, hold-to-run operation;

b) the average closing speed of the panels is limited to 0.30 m/s;

c) the car door is of construction as provided for in **5.3.1.2**;

d) the car door is at least two-thirds closed before the landing door begins to close;

e) the door mechanism is protected against unintentional access.

5.3.6.2.3 *Other types of doors*

When using other types of doors, for example, hinged doors, with power operation, where there is a risk of striking persons when opening or closing, precautions similar to those laid down for power-operated sliding doors shall be taken.

5.3.6.3 *Reversal of closing movement*

If car doors are automatic power-operated a control button inside the car shall allow to reopen the doors when the car is at the landing.

NOTE — This is normally referred to as a “door re-open button”.

5.3.7 *Local Landing Lighting and “Car Here” Signal Lights*

5.3.7.1 *Local landing lighting*

The natural or artificial lighting of the landings in the vicinity of landing doors shall be at least 50 lux at floor level, such that a user can see ahead when they are opening the landing door to enter the lift, even if the car light has failed (*see* **0.4.2**).

NOTE — This can be subject to national/state building regulations.

Free Standard provided by BIS via BSB Edge Private Limited to Akshay Chaudhary - Chennai(akshay.chdary@gmail.com) 136.238.2.51 [for non-commercial use only].

5.3.7.2 *"Car here" Indication*

5.3.7.2.1 In the case of landing doors with manual opening, the user needs to know whether the car is there or not.

To this effect, one of the following solutions shall be installed:

a) one or more transparent vision panels conforming to the following four conditions at the same time:
   1) mechanical strength as specified in **5.3.5.3**, breaking or damaging the glass during the door pendulum shock test per **5.3.5.3.4 a)** is not considered as test failure. The glass panel shall not detach from the door;
   2) laminated glass of minimum thickness of 3/3/0.76 mm and marked with:
      i) the name of the supplier and trade mark;
      ii) the thickness (for example, 3/3/0.76 mm).
   3) minimum glazed area per landing door of 0.015 m^2 with a minimum of 0.01 m^2 per vision panel;
   4) width of at least 60 mm, and at most 150 mm. The lower edge of vision panels which are wider than 80 mm shall be at least 1 m above floor level.
b) an illuminated "car here" signal which shall light up when the car is about to stop or has stopped at the particular landing. This signal may be switched off when the car is parked and the doors are closed, but shall light again when the call button of the landing where the car is parked is activated.

5.3.7.2.2 The car door shall be fitted with a vision panel(s) if the landing door has a vision panel(s) as in **5.3.7.2.1 a)**, unless the car door is automatic and remains in the open position when the car is stationary at the level of a landing.

When a vision panel(s) is fitted, it shall satisfy the requirements of **5.3.7.2.1 a)** and be positioned in the car door such that it is in visual alignment with the landing door vision panel(s) when the car is at the level of the landing.

5.3.8 *Locking and Closed Landing Door Check*

5.3.8.1 *Protection against the risk of falling*

It shall not be possible in normal operation to open a landing door (or any of the panels in the case of a multi-panel door) unless the car has stopped, or is on the point of stopping, in the unlocking zone of that door.

The unlocking zone shall not extend more than 0.20 m above and below the landing level.

In the case, however, of mechanically operated car and landing doors operating simultaneously, the unlocking zone may extend to a maximum of 0.35 m above and below the landing level.

5.3.8.2 *Protection against shearing*

With the exception of **5.12.1.4** and **5.12.1.8**, it shall not be possible to start the lift, nor keep it in motion, if a landing door, or any of the panels in the case of a multi-panel door, is open.

5.3.9 *Locking and Emergency Unlocking of Landing and Car Doors*

5.3.9.1 *Landing door locking devices*

5.3.9.1.1 *General*

Each landing door shall be provided with a locking device satisfying the conditions of **5.3.8.1**. This device shall be protected against deliberate misuse.

With the exception of **5.12.1.4** and **5.12.1.8**, the effective locking of the landing door in the closed position shall precede the movement of the car. The locking shall be proved by an electric safety device in conformity with **5.11.2.**

5.3.9.1.2 The electric safety device shall not be activated unless the locking elements are engaged by at least 7 mm (*see* **Fig. 12**).

5.3.9.1.3 The element of the electric safety device proving the locked condition of the door panel(s) shall be positively operated without any intermediate mechanism by the locking element.

Specific case: In the case of locking devices used in installations requiring special protection against risks of humidity or explosion, the connection may be only positive, provided the link between the mechanical lock and the element of the electric safety device proving the locked condition, can only be interrupted by deliberately destroying the locking device.

5.3.9.1.4 For hinged doors, locking shall be effected as near as possible to the vertical closing edge(s) of the doors, and maintained even in the case of panels sagging.

5.3.9.1.5 The locking elements and their fixings shall be resistant to shock, and made of durable material that maintains the strength property over their intended lifetime, under the environmental conditions.

NOTE — Shock requirements can be found in **5.2** of IS 17900 (Part 2).

5.3.9.1.6 The engagement of the locking elements shall be achieved in such a way that a force of 300 N in the

Free Standard provided by BIS via BSB Edge Private Limited to Akshay Chaudhary - Chennai(akshay.chdary@gmail.com) 136.238.2.51 [for non-commercial use only].

Dimensions in millimetres

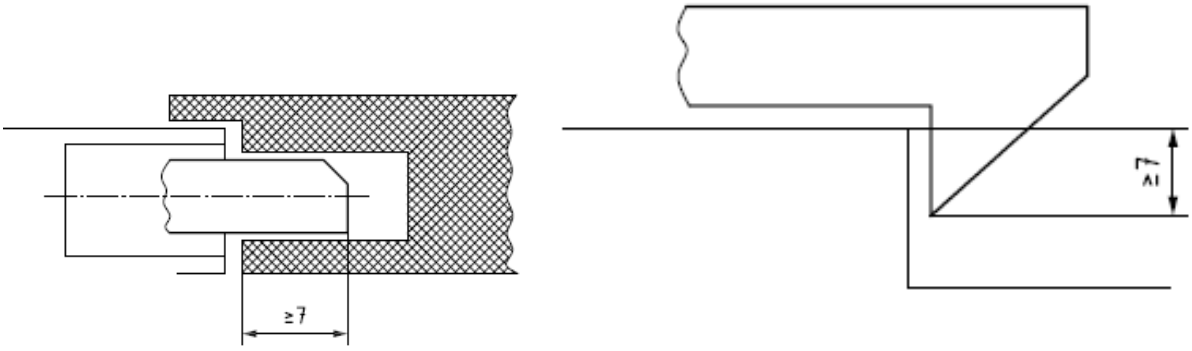

Fig. 12 Examples Of Locking Elements

opening direction of the door does not diminish the effectiveness of locking.

5.3.9.1.7 The lock shall resist, without permanent deformation or breakage which could adversely affect safety during the test laid down in **5.2** of IS 17900 (Part 2), a minimum force at the level of the lock and in the direction of opening of the door of:

a) 1 000 N in the case of sliding doors;
b) 3 000 N on the locking pin, in the case of hinged doors.

5.3.9.1.8 The locking action shall be effected and maintained by the action of gravity, permanent magnets, or springs. The springs shall act by compression, be guided and of such dimensions that, at the moment of unlocking, the coils are not compressed solid.

In the event of the permanent magnet (or spring) no longer fulfilling its function, gravity shall not cause unlocking.

If the locking element is maintained in position by the action of a permanent magnet, it shall not be possible to neutralize its effect by simple means (for example, heat or shock).

5.3.9.1.9 The locking device shall be protected against the risk of an accumulation of dust, which could hinder its proper functioning.

5.3.9.1.10 Inspection of the working parts shall be easy; for example, by using a transparent cover.

5.3.9.1.11 In the case where the lock contacts are in a box, the fixing screws for the cover shall be of the captive type, so that they remain in the holes in the cover or box when opening the cover.

5.3.9.1.12 The locking device is regarded as a safety component and shall be verified according to the requirements in **5.2** of IS 17900 (Part 2).

5.3.9.1.13 On locking devices, a data plate shall be fixed indicating:

a) the name of the manufacturer of the locking device;
b) the type of locking device.

5.3.9.2 *Car door locking devices*

If the car door needs to be locked [*see* **5.2.5.3.1 c)**], the locking device shall be designed to meet the requirements given in **5.3.9.1**.

This device shall be protected against deliberate misuse.

The locking device is regarded as a safety component and shall be verified according to the requirements in **5.2** of IS 17900 (Part 2).

5.3.9.3 *Emergency unlocking*

5.3.9.3.1 Each of the landing doors shall be capable of being unlocked from the outside with the aid of an emergency unlocking key, which will fit the unlocking triangle, as defined in **Fig. 13**.

5.3.9.3.2 The position of the unlocking triangle can be on the door panel or frame. When in a vertical plane, on the door panel or frame, the position of the unlocking triangle shall not exceed 2.00 m in height above the landing.

If the unlocking triangle is on the frame and the key hole downwards in the horizontal plane, the maximum height of the unlocking triangle hole from the landing floor shall be 2.70 m. The length of the emergency unlocking key shall be at least equal to the height of the door minus 2.0 m.

Where the emergency unlocking key is of a length greater than 0.20 m, it is regarded as a special tool and shall be available at the installation site.

Free Standard provided by BIS via BSB Edge Private Limited to Akshay Chaudhary - Chennai(akshay.chdary@gmail.com) 136.238.2.51 [for non-commercial use only].

Dimensions in millimetres

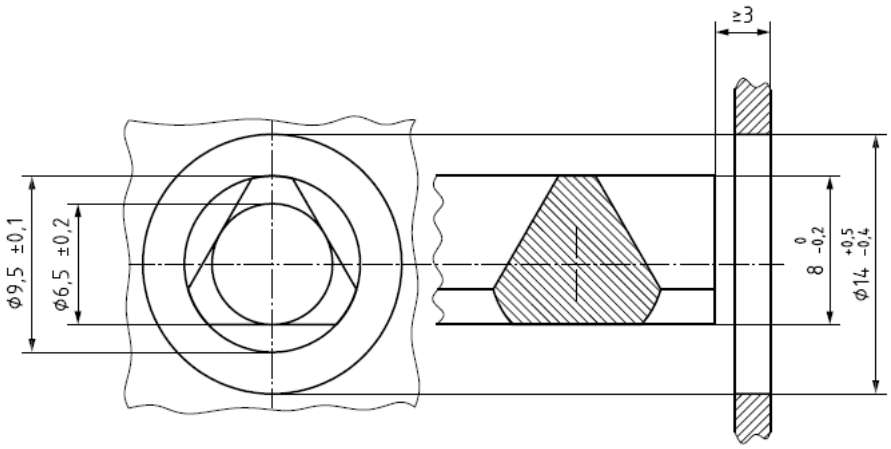

FIG. 13 UNLOCKING TRIANGLE

5.3.9.3.3 After an emergency unlocking, the locking device shall not be able to remain in the unlocked position with the landing door closed.

5.3.9.3.4 In the case of landing doors driven by the car door, if the landing door becomes open for whatever reason when the car is outside the unlocking zone, a device (either weight or springs) shall ensure closing and locking of the landing door.

5.3.9.3.5 If there is no access door to the pit, other than the landing door, the door lock shall be reachable safely within a height of 1.80 m and a maximum horizontal distance of 0.80 m from the pit ladder according to **5.2.2.4 b)**, or a permanently installed device shall allow a person in the pit to unlock the door.

5.3.9.4 *Electric safety device for proving the landing door closed*

5.3.9.4.1 Each landing door shall be provided with an electric safety device in conformity with **5.11.2** for proving the closed position, so that the requirements of **5.3.8.2** are satisfied.

5.3.9.4.2 In the case of horizontally sliding landing doors, coupled with car doors, this device may be in common with the device for proving the locked condition, provided that it is dependent upon the effective closing of the landing door.

5.3.9.4.3 In the case of hinged landing doors, this device shall be placed adjacent to the closing edge of the door or on the mechanical device proving the closed condition of the door.

5.3.10 *Requirements Common to Devices for Proving the Locked Condition and the Closed Condition of the Landing Door*

5.3.10.1 It shall not be possible, from positions normally accessible to persons, to operate the lift with a landing door open or unlocked, after one single action not forming part of the normal operating sequence.

5.3.10.2 The means used to prove the position of a locking element shall have positive operation.

5.3.11 *Sliding Landing Doors with Multiple, Mechanically Linked Panels*

5.3.11.1 If a sliding landing door comprises several directly mechanically linked panels, it is permitted to:

a) place the device required in **5.3.9.4.1** or **5.3.9.4.2**, on a single panel;

b) lock only one panel, provided that this single locking prevents the opening of the other panel(s) by hooking the panels in the closed position in case of telescopic doors.

A back fold of the sheet of each panel of a telescopic door and hooking of the fast panel to the slow panel when the door is in the closed position, or hooks on the hanger plate realizing the same linkage, are considered as a direct mechanical linkage, and therefore does not require a device as per **5.3.9.4.1** or **5.3.9.4.2** on all panels. The linkage shall be ensured even in case of rupture of guiding means. Simultaneous rupture of upper and lower guiding means needs not to be taken into consideration. Compliance with the strength requirements of **5.3.11.3** shall be verified with the minimum possible design overlapping of the hooking elements of the panels.

NOTE — The hanger plate is not considered as part of the guiding means.

5.3.11.2 If a sliding door comprises several indirectly mechanically linked panels (for example, by rope,

Free Standard provided by BIS via BSB Edge Private Limited to Akshay Chaudhary - Chennai(akshay.chdary@gmail.com) 136.238.2.51 [for non-commercial use only].

belt or chain), it is permitted to lock only one panel, provided that this single locking prevents the opening of the other panel(s), and that these are not fitted with a handle.

The closed position of the other panel(s), not locked by the locking device, shall be proved by an electric safety device in conformity with **5.11.2**.

Provided that in all cases, the interconnecting mechanism of door panels is so arranged that locking of one panel will prevent movement of all panels notwithstanding breakage of the chain or rope used for interconnecting the panels.

5.3.11.3 The devices providing direct mechanical linkage between panels according to **5.3.11.1**, or indirect mechanical linkage according to **5.3.11.2**, are considered as forming part of the locking device.

They shall be capable of resisting the force of 1 000 N as per **5.3.9.1.7 a)**, even if the force of 300 N mentioned in **5.3.5.3.1** is acting simultaneously.

5.3.12 *Closing of Automatically Operated Landing Doors*

In the case of lift landing doors participating to the fire protection of the building, they shall be closed in normal operation, after the necessary period of time, which may be defined according to the usage of the lift, in the absence of a command for the movement of the car.

NOTE — For the requirements for fireman's lifts and the behavior of lifts in the event of a fire, refer to **5.12.5**. Further guidance can be found in the National Building Code of India, SP 7.

5.3.13 *Electric Safety Device for Proving the Car Doors Closed*

5.3.13.1 With the exception of **5.12.1.4** and **5.12.1.8**, it shall not be possible to start the lift, nor keep it in motion, if a car door, or any of the panels in the case of a multi-panel door, is open.

5.3.13.2 Each car door shall be provided with an electric safety device for proving the closed position in conformity with **5.11.2**, so that the conditions imposed by **5.3.13.1** are satisfied.

5.3.14 *Sliding or Folding Car Doors with Multiple, Mechanically Linked Panels*

5.3.14.1 If a sliding or folding car door comprises several directly mechanically linked panels, it is permitted:

a) to place the device required in **5.3.13.2**:
   1) either on a single panel (the leading panel in the case of telescopic doors); or
   2) on the door driving element, if the mechanical connection between this element and the panel is direct;
b) in the case and conditions laid down in **5.2.5.3.1 c)**, to lock only one panel, provided that this single locking prevents the opening of the other panel(s) by hooking the panels in the closed position in case of telescopic or folding doors.

A back fold of the sheet of each panel of a telescopic door and hooking of the fast panel to the slow panel when the door is in the closed position, or hooks on the hanger plate realizing the same linkage are considered as a direct mechanical linkage, and therefore does not require device as required in **5.3.13.2** on all panels. The linkage shall be ensured even in case of rupture of guiding means. Compliance with the strength requirements of **5.3.11.3** shall be verified with the minimum possible design overlapping of the hooking elements of the panels.

NOTE — The hanger plate is not considered as part of the guiding means.

5.3.14.2 If a sliding door comprises several indirectly mechanically linked panels (for example, by rope, belt or chain), it is permitted to place the device (**5.3.13.2**) on a single panel, provided that:

a) it is not the driven panel;
b) the driven panel is directly mechanically linked to the door driving element.

5.3.15 *Opening the Car Door*

5.3.15.1 If the lift stops for any reason in the unlocking zone (**5.3.8.1**), it shall be possible with a force not greater than 300 N, to open the car and landing door by hand from:

a) the landing, after the landing door has been unlocked with the emergency unlocking key or being unlocked by the car door;
b) within the car.

5.3.15.2 In order to restrict the opening of the car door by persons inside the car, a means shall be provided such that:

a) when the car is moving, the opening of the car door shall require a force of more than 50 N;
b) when the car is outside of the zone defined in **5.3.8.1**, it shall not be possible to open the car door more than 50 mm with a force of 1 000 N at the restrictor mechanism, nor shall the door open under automatic power operation.

5.3.15.3 It shall be possible, at least where the car is stopped within the distance defined in **5.6.7.5**, once the corresponding landing door has been opened, to open the car door from the landing without tools,

Free Standard provided by BIS via BSB Edge Private Limited to Akshay Chaudhary - Chennai(akshay.chdary@gmail.com) 136.238.2.51 [for non-commercial use only].

other than the emergency unlocking key or tools being permanently available on site. This also applies to car doors fitted with locking devices as **5.3.9.2**.

5.3.15.4 In the case of lifts covered by **5.2.5.3.1 c)**, the opening of the car door from inside the car shall be possible only when the car is in the unlocking zone.

5.4 Car, Counterweight and Balancing Weight

5.4.1 *Height of Car*

The interior clear height of the car shall be at least 2 m.

5.4.2 *Available Car Area, Rated Load, Number of Passengers*

5.4.2.1 *General case*

5.4.2.1.1 *General*

To prevent overloading of the car by persons, the available area of the car shall be limited.

To this effect the relationship between rated load and maximum available area is given in **Table 6** for passenger lifts and **Table 7** for goods lifts.

5.4.2.1.2 The car area shall be measured inside the car body, from wall to wall, excluding finishes, at a height 1 m from the floor. Refer Fig. 13A.

5.4.2.1.3 Recesses and extensions in the car walls, even of height less than 1 m, whether protected or not by separating doors, are only permitted if their area is taken into account in the calculation of maximum available car area.

Recesses or extensions above the car floor level, which cannot accommodate a person due to equipment placed in them need not be taken into account for the calculation of the maximum available car area (for example, niches for tip-up seats, recesses for intercoms).

Where there is an available area between the entrance frame uprights when the doors are closed, it shall not be included in the floor area.

5.4.2.1.4 Overloading of the car shall be monitored by means of a device according to **5.12.1.2**.

5.4.2.2 *Goods lifts*

5.4.2.2.1 For goods lifts, the requirements of **5.4.2.1** shall be applied under the following conditions, either:

a) the weight of handling devices are included in the rated load; or

b) the weight of handling devices shall be considered separately from the rated load under the following conditions:

   1) handling devices are used only for loading and unloading of the car and are not intended to be transported with the load;

   2) for traction and positive drive lifts, the design of the car, the car sling, the car safety gear, the guide rails, the machine brake, the traction and the unintended car movement protection means shall be based on the total load of rated load plus the weight of handling devices;

   3) for hydraulic lifts the design of the car, the car sling, the connection between the car and the ram (cylinder), the car safety gear, the rupture valve, the restrictor/one-way restrictor, the pawl device, the guide rails and the unintended movements protection means shall be based on the total load of rated load plus the weight of handling devices;

   4) if the stroke of the car due to loading and un-loading exceeds the maximum levelling accuracy, a mechanical device shall limit any downward movement of the car, which complies with the following:

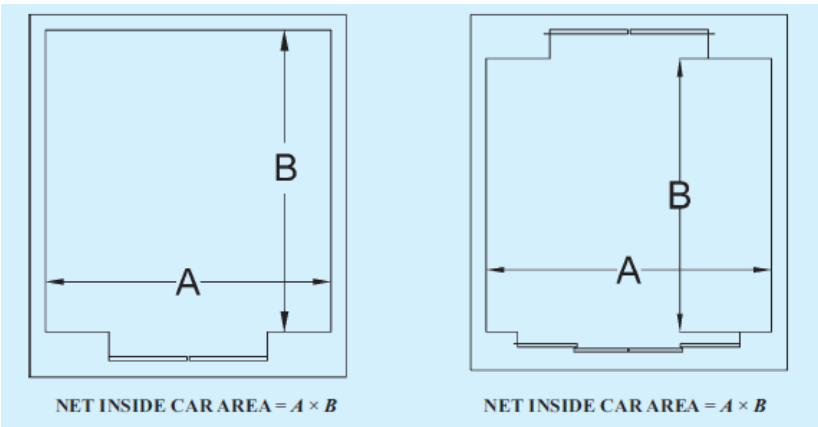

FIG. 13A AVAILABLE CAR AREA

Free Standard provided by BIS via BSB Edge Private Limited to Akshay Chaudhary - Chennai(akshay.chdary@gmail.com) 136.238.2.51 [for non-commercial use only].

Table 6 No. of Passengers, Rated Load, Minimum Available Car Area, and Maximum Available Car Area

(*Clauses* 5.4.2.1.1, 5.6.5.1 *and* 6.3.4)

Sl No.	No. of Passengers	Rated Load W Kg	Minimum Available Net Inside Area m^2	Maximum Available Net Inside Area A m^2
(1)	(2)	(3)	(4)	(5)
i)	4	272	0.68	0.77
ii)	5	340	0.85	0.95
iii)	6	408	1.00	1.12
iv)	7	476	1.16	1.28
v)	8	544	1.31	1.45
vi)	9	612	1.46	1.60
vii)	10	680	1.61	1.76
viii)	11	748	1.77	1.91
ix)	12	816	1.92	2.05
x)	13	884	2.06	2.20
xi)	14	952	2.23	2.34
xii)	15	1 020	2.35	2.47
xiii)	16	1 088	2.48	2.61
xiv)	17	1 156	2.62	2.74
xv)	18	1 224	2.75	2.87
xvi)	19	1 292	2.88	3.00
xvii)	20	1 360	3.01	3.13
xviii)	21	1 428	3.14	3.25
xix)	22	1 496	3.26	3.37
xx)	23	1 564	3.38	3.49
xxi)	24	1 632	3.50	3.61
xxii)	25	1 700	3.62	3.73
xxiii)	26	1 768	3.74	3.84
xxiv)	27	1 836	3.85	3.95
xxv)	28	1 904	3.96	4.07
xxvi)	29	1 972	4.08	4.18
xxvii)	30	2 040	4.17	4.29
xxviii)	31	2 108	4.25	4.39
xxix)	32	2 176	4.34	4.50
xxx)	33	2 244	4.44	4.61
xxxi)	34	2 312	4.53	4.71
xxxii)	35	2 380	4.62	4.81
xxxiii)	36	2 448	4.72	4.92

NOTES:

1 The maximum available car area is calculated as per formula: $W = 35.05A^2 + 325.66A$, where

W = the rated load, in kg

A = the maximum area, in m^2.

2 Beyond 36 passengers add 0.109 m^2 in maximum available area for each extra passenger.

3 Beyond 36 passengers add 0.104 m^2 in minimum available area for each extra passenger.

4 Hospital lifts shall be treated as passenger lifts & shall be designed according to above table.

5 For other details such as civil dimensions for lifts etc. the National Building Code of India, SP 7 shall be referred to.

Free Standard provided by BIS via BSB Edge Private Limited to Akshay Chaudhary - Chennai(akshay.chdary@gmail.com) 136.238.2.51 [for non-commercial use only].

i) the levelling accuracy shall not exceed 20 mm;

ii) the mechanical device shall be activated before the doors open;

iii) the mechanical device shall have a sufficient strength to hold the car even if the machine brake is not engaged or the down valve on a hydraulic lift is opened;

iv) re-levelling movements shall be prevented by an electric safety device in conformity with **5.11.2** if the mechanical device is not in the active position;

v) normal operation of the lift shall be prevented by an electric safety device in conformity with **5.11.2** if the mechanical device is not in the inactive position.

5) the maximum weight of handling devices shall be indicated at the landings according to **Fig. 14**.

5.4.2.2.2 For goods lifts, the available area of the car may be greater than the value determined from **Table 7**, but shall not exceed the value in m^2 determined by dividing the rated load in kg by 352 (3.45 kN).

For motor vehicle lifts, the available area of the car may be greater than the value determined from **Table 7**, but shall not exceed the value in m^2 determined by dividing the rated load in kg by 148 (1.45 kN).

Table 7 Rated Load and Maximum Available Car Area: Goods Lifts

(*Clauses* 5.4.2.1.1, 5.4.2.2.2, 5.4.2.2.3, 5.4.2.2.4 *and* 6.3.4)

Sl No.	Rated Load in kg	Maximum Available Net Inside Area A m^2
(1)	(2)	(3)
i)	250	0.71
ii)	500	1.34
iii)	750	1.91
iv)	1 000	2.43
v)	1 250	2.92
vi)	1 500	3.38
vii)	1 750	3.81
viii)	2 000	4.22
ix)	2 250	4.62
x)	2 500	5.00

NOTES:

1 The maximum available area in above table is calculated as per formula:

$W = 35.05A^2 + 325.66A$,

Where,

W = the rated load, in kg

A = the maximum available area, in m^2.

2 Beyond 2 500 kg, add 0.16 m^2 for each extra 100 kg.

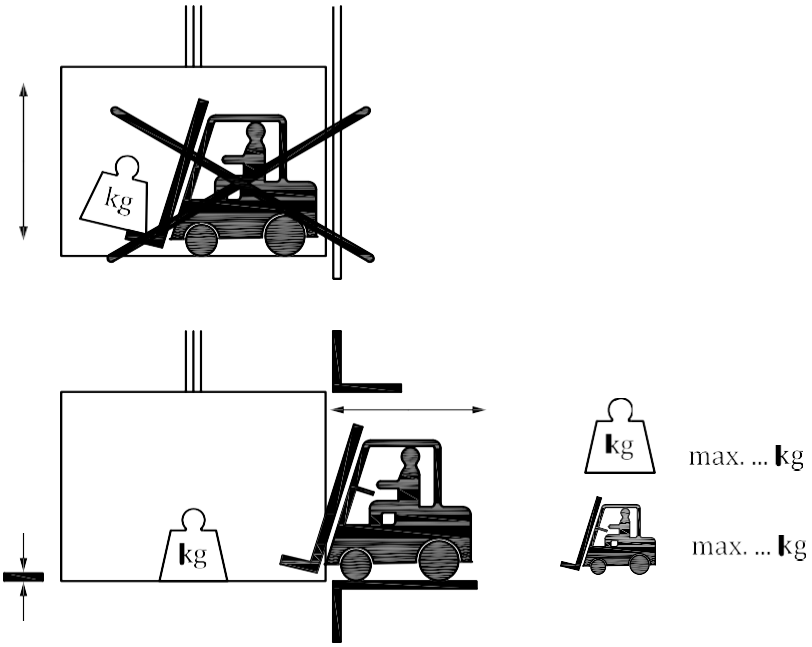

NOTE — The Forklift symbol W014 as per IS 16451, and the Mass symbol 1321B as per ISO 7000, are incorporated in these pictograms.

Fig. 14 Pictogram At Landings for Loading by Handling Devices

Free Standard provided by BIS via BSB Edge Private Limited to Akshay Chaudhary - Chennai(akshay.chdary@gmail.com) 136.238.2.51 [for non-commercial use only].

5.4.2.2.3 For goods lifts, hydraulically driven, the available car area of a lift with balancing weight shall be such that a load in the car resulting from **Table 7** shall not cause a pressure exceeding 1.4 times the pressure that the jack and the piping are designed for.

5.4.2.2.4 For goods lifts, hydraulically driven, the design of the car, the car sling, the connection between the car and the ram (cylinder), the suspension means (of indirect acting lifts), the car safety gear, the rupture valve, the restrictor/one-way restrictor, the pawl device, the guide rails and the buffers shall be based on a load resulting from Table 7. The cylinder can be calculated according to the rated load.

5.4.2.3 *Number of passengers*

5.4.2.3.1 The number of passengers shall be obtained from the smaller value of the following:

a) either, the result of **Formula (5)** rounded down to the nearest whole number:

$$\frac{Q}{68} \quad \text{... (5)}$$

where Q is the rated load; or

b) **Table 8**.

5.4.2.3.2 In the car, the following shall be displayed:

a) the manufacturer/installer's name;

b) the installation serial number;

c) the year of construction;

d) the rated load of the lift in kilograms;

e) the number of persons, in accordance with **5.4.2.3.1**.

The notice shall be made as follows: **"... kg ... PERS**." or by using symbols for weight and persons.

EXAMPLE: For persons: and for load:

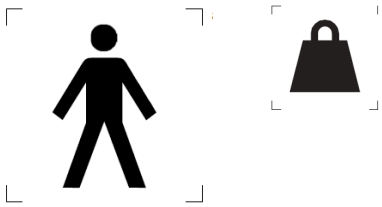

NOTES:

1 Pictograms can be before or after the number, above or below each other, and in any order.

2 Person symbol as per 5840 of ISO 7000. Mass symbol as per 1321B of ISO 7000.

The minimum height of the characters and pictograms used for the notice shall be:

a) 10 mm for capital letters and numbers and pictograms;

b) 7 mm for small letters.

5.4.2.3.3 For goods lifts, a sign visible from the landing loading area at all times shall display the rated load.

Table 8 Number of Passengers and Minimum Car Available Area

(*Clause* 5.4.2.3.1)

Sl No.	Number of Passengers	Minimum Available Area (m^2)
(1)	(2)	(3)
i)	4	0.68
ii)	5	0.85
iii)	6	1
iv)	7	1.16
v)	8	1.31
vi)	9	1.46
vii)	10	1.61
viii)	11	1.77
ix)	12	1.92
x)	13	2.06
xi)	14	2.23
xii)	15	2.35
xiii)	16	2.48
xiv)	17	2,62
xv)	18	2.75
xvi)	19	2.88
xvii)	20	3.01
xviii)	21	3.14
xix)	22	3.26
xx)	23	3.39
xxi)	24	3.51
xxii)	25	3.62
xxiii)	26	3.74
xxiv)	27	3.86
xxv)	28	3.97
xxvi)	29	4.08
xxvii)	30	4.17
xxviii)	31	4.25
xxix)	32	4.34
xxx)	33	4.44
xxxi)	34	4.53
xxxii)	35	4.62
xxxiii)	36	4.72

Free Standard provided by BIS via BSB Edge Private Limited to Akshay Chaudhary - Chennai(akshay.chdary@gmail.com) 136.238.2.51 [for non-commercial use only].

5.4.3 *Walls, Floor and Roof of the Car*

5.4.3.1 The car shall be completely enclosed by walls, floor and roof. The only permissible openings are as follows:

a) entrances for the normal access of users;

b) this sub clause number has not been used;

c) ventilation apertures.

5.4.3.2 The assembly comprising the sling, guide shoes, walls, floor, ceiling and roof of the car shall have mechanical strength to resist the forces which are applied in normal lift operation and the operation of safety devices.

5.4.3.2.1 When safety devices are operated, the floor of the car, with or without the load uniformly distributed, shall not incline more than 5 percent from its normal position.

5.4.3.2.2 Each wall of the car shall have a mechanical strength such that:

a) when a force of 300 N, being evenly distributed over an area of 5 cm^2 in round or square section, is applied at right angles to the wall at any point from the inside of the car towards the outside, it shall resist without:

   1) any permanent deformation greater than 1 mm;

   2) elastic deformation greater than 15 mm.

b) when a force of 1 000 N, being evenly distributed over an area of 100 cm^2 in round or square section, is applied at right angles to the wall at any point from the inside of the car towards the outside, it shall resist without permanent deformation greater than 1 mm.

NOTE — These forces could be applied on the "structural" wall, excluding mirrors, decorative panels, car operating panel(s), etc.

5.4.3.2.3 Car walls made of glass or partly glass shall be laminated.

When an impacting energy equivalent to a falling height of 500 mm of the hard pendulum shock device [**5.14.2.1** of IS 17900 (Part 2)] and an impacting energy equivalent to a falling height of 700 mm of the soft pendulum shock device [**5.14.2.2** of IS 17900 (Part 2)] is striking the glass wall at a point 1 m above the floor on the center line of the panel or for partial glass walls at the center of the glass element, the following shall be satisfied:

a) there shall be no cracks on the wall element;

b) there shall be no damage on the surface of the glass except chips of 2 mm maximum in diameter;

c) there shall be no loss of integrity.

These tests are not needed if car wall elements made of flat glass, according to **Table 9**, are framed on all sides.

The above tests shall be carried out on the inside face of the car wall.

Table 9 Flat Glass Panels to be Used in Walls of the Car

(*Clause* 5.4.3.2.3)

Sl No.	Type of Glass	Minimum Thickness mm	
		Diameter of Inscribed Circle of 1 m Maximum	Diameter of Inscribed Circle of 2 m Maximum
(1)	(2)	(3)	(4)
i)	Laminated toughened or laminated tempered	8 (4 + 4 + 0.76)	10 (5 + 5 + 0.76)
ii)	Laminated	10 (5 + 5 + 0.76)	12 (6 + 6 + 0.76)

5.4.3.2.4 The fixing of the glass in the wall shall ensure that the glass cannot slip out of the fixings during all shock conditions encountered in both directions of travel, inclusive of operation of safety devices.

5.4.3.2.5 The glass panels shall have markings giving the following information:

a) name of the supplier and trademark;

b) type of glass;

c) thickness (for example, 8/8/0.76 mm).

5.4.3.2.6 The car roof shall satisfy the requirements of **5.4.7**.

5.4.3.3 Car walls with glass placed lower than 1.10 m from the floor shall have a handrail at a height between 0.90 m and 1.10 m. This handrail shall be fastened independently from the glass.

5.4.4 *Car Door, Floor, Wall, Ceiling and Decorative Materials*

The supporting structure of the car body shall be made of non-flammable materials.

The materials selected for car floor, wall and ceiling finishes shall be difficult to ignite & shall meet the requirements of at least class 2 products as per IS 12777. It shall be good in terms of the flaming droplet property.

Paint finishes, laminates up to 0.30 mm on the walls and fixtures, such as operating devices, lighting and indicators are excluded from the above requirements.

Free Standard provided by BIS via BSB Edge Private Limited to Akshay Chaudhary - Chennai(akshay.chdary@gmail.com) 136.238.2.51 [for non-commercial use only].

Mirrors or other glass finishes, where used within the car, shall comply with mode B or C according to Annex E of ISO 29584, if broken.

5.4.5 *Apron*

5.4.5.1 Each car sill shall be fitted with an apron, which extends at least to the full width of the clear landing entrance, which it faces. This vertical section shall be extended downwards by a chamfer whose angle with the horizontal plane shall be at least 60°. The projection of this chamfer of the horizontal plane shall be not less than 20 mm.

Any projections on the face of the apron, such as fixings, shall not exceed 5 mm. Projections exceeding 2 mm shall be chamfered at least 75° to the horizontal.

5.4.5.2 The height of the vertical portion shall be at least 0.75 m.

5.4.5.3 When a force of 300 N, being evenly distributed over an area of 5 cm^2 in round or square section, is applied at right angles from the landing side to the apron at any point along the lower edge of the vertical section, the apron shall resist without:

a) permanent deformation greater than 1 mm;
b) elastic deformation greater than 35 mm.

5.4.6 This clause number has not been used.

5.4.7 *Car Roof*

5.4.7.1 In addition to **5.4.3**, the car roof shall fulfil the following requirements:

a) the car roof shall have sufficient strength to support the maximum number of persons, as indicated in **5.2.5.7.1**. However, the car roof shall resist a minimum force of 2 000 N at any position on an area of 0.30 m × 0.30 m without permanent deformation.
b) the surface of the car roof where a person needs to work or move between working areas shall be non-slip.

NOTE — For guidance, *see* **4.2.4.6** of IS 16809 (Part 2).

5.4.7.2 The following protection shall be provided:

a) the car roof shall be provided with a toe board a minimum of 0.10 m high, positioned either:
   1) on the outer edge of the car roof; or
   2) between the outer edge and the position of the balustrade, where a balustrade (**5.4.7.4**) is provided.
b) where the free distance in a horizontal plane, beyond and perpendicular to the outer edge of the car roof to the wall of the well exceeds 0.30 m, a balustrade shall be provided to the dimensions given in **5.4.7.4**.

The free distances shall be measured to the wall of the well, allowing a larger distance in recesses, the width or height of which is less than 0.30 m.

5.4.7.3 Where lift component(s) located between the outer edge of the car roof and the wall of the well can prevent the risk of falling (*see* Fig. 15 and Fig. 16), the protection shall fulfil the following conditions simultaneously:

a) where the distance between the outer edge of the car roof and the well wall is greater than 0.30 m, it shall not be possible to place a horizontal circle with a diameter greater than 0.30 m between the outer edge of the car roof and the relevant component(s), between components or between the end of the balustrade and the component(s);
b) when a force of 300 N is applied horizontally at right angles to any point to the component, it shall not cause the component to deflect to a point where a) is no longer fulfilled;
c) the component shall extend in height above the car roof to form the same level of protection as defined in **5.4.7.4** throughout the travel of the car.

5.4.7.4 Balustrades shall fulfil the following requirements:

a) they shall consist of a handrail and an intermediate bar at half the height of the balustrade;
b) considering the free distance in a horizontal plane beyond the inner edge of the handrail of the balustrade and the well wall (*see* **Fig. 17**), its height shall be at least:
   1) 0.70 m where the distance is up to 0.50 m;
   2) 1.10 m where the distance exceeds 0.50 m.
c) the balustrade shall be located at a maximum distance of 0.15 m from the edges of the car roof;
d) the horizontal distance between the outer edge of the handrail and any part in the well (counterweight or balancing weight, switches, rails, brackets, etc.) shall be at least 0.10 m.

When a force of 1 000 N is applied horizontally at right angles to any point at the top of the balustrade, it shall resist without elastic deformation greater than 50 mm.

Free Standard provided by BIS via BSB Edge Private Limited to Akshay Chaudhary - Chennai(akshay.chdary@gmail.com) 136.238.2.51 [for non-commercial use only].

Dimensions in millimetres

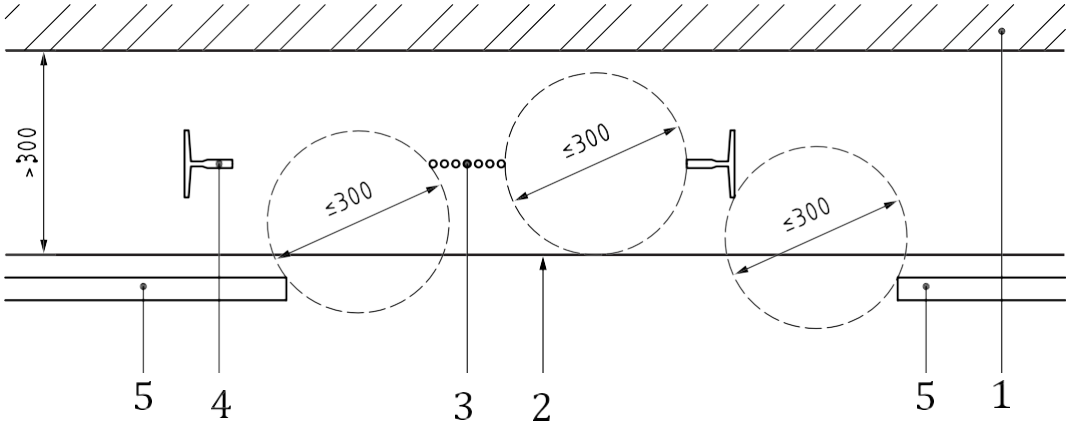

Key

1 lift well wall
2 lift car roof edge
3 ropes, belts
4 guide rails
5 balustrade

FIG. 15 EXAMPLE OF COMPONENTS PROVIDING PROTECTION FROM FALLING (ELECTRIC LIFTS)

Dimensions in millimetres

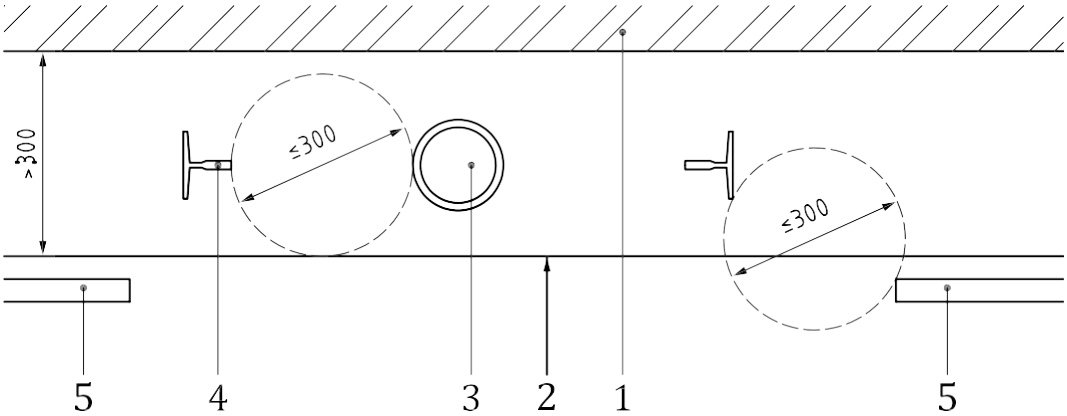

Key

1 lift well wall
2 lift car roof edge
3 ram
4 guide rails
5 balustrade

FIG. 16 EXAMPLE OF COMPONENTS PROVIDING PROTECTION FROM FALLING (HYDRAULIC LIFTS)

Free Standard provided by BIS via BSB Edge Private Limited to Akshay Chaudhary - Chennai(akshay.chdary@gmail.com) 136.238.2.51 [for non-commercial use only].

Dimensions in millimetres

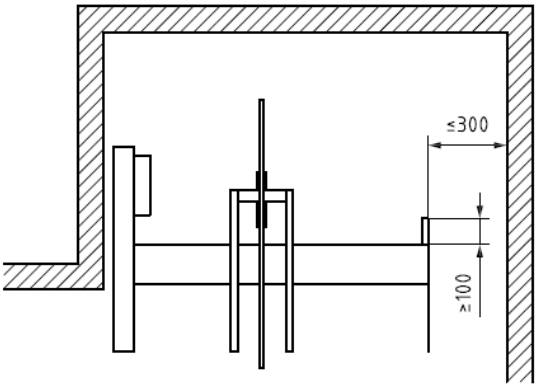

a) No balustrade required but a toe-board 100 mm minimum high

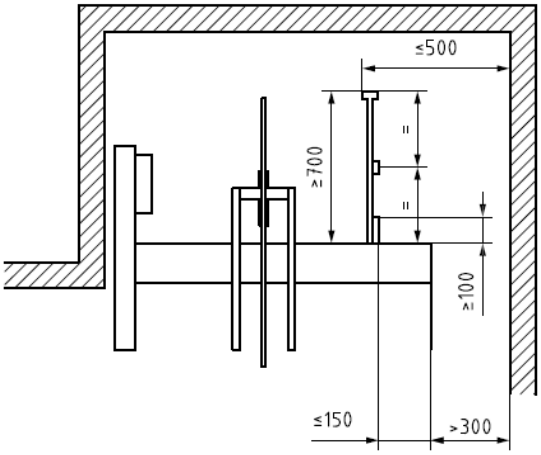

b) Balustrade required, 700 mm minimum height and a toe-board 100 mm minimum height

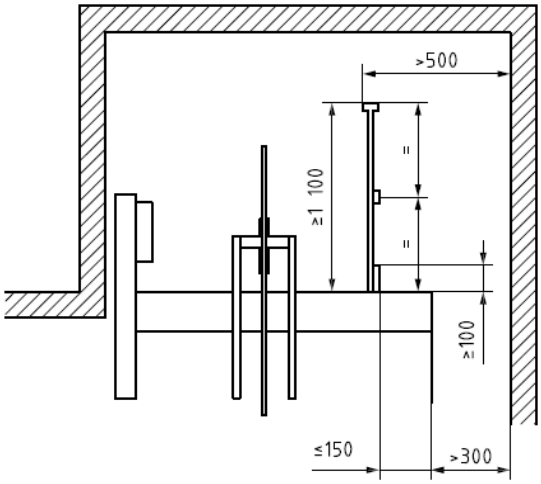

c) Balustrade required, 1 100 mm minimum height and a toe-board 100 mm minimum height

FIG. 17 CAR ROOF BALUSTRADE — HEIGHT

5.4.7.5 Any glass used for the car roof shall be laminated.

5.4.7.6 Pulleys fixed to the car shall have protection according to **5.5.7**.

5.4.8 *Equipment on Top of the Car*

The following shall be installed on top of the car:

a) control device in conformity with **5.12.1.5** (inspection operation) operable within 0.30 m horizontally from a refuge space (**5.2.5.7.1**);

b) stopping device in conformity with **5.12.1.11**, in an easily accessible position and no more than 1 m from the entry point for inspection or maintenance personnel.

   This device may be the one located next to the inspection operation control if this is not placed more than 1 m from the access point;

c) socket outlet in conformity with **5.10.7.2**.

5.4.9 *Ventilation*

5.4.9.1 Cars shall be provided with ventilation apertures in the upper and lower parts of the car.

5.4.9.2 The effective area of ventilation apertures situated in the upper part of the car shall be at least 2 percent of the available car area, and the same also applies for the apertures in the lower part of the car.

The gaps round the car doors may be taken into account in the calculation of the area of ventilation holes, up to 50 percent of the required effective area.

5.4.9.3 Ventilation apertures shall be built or arranged in such a way that it is not possible to pass a straight rigid rod 10 mm in diameter through the car walls from the inside.

5.4.10 *Lighting*

5.4.10.1 The car shall be provided with electrical lighting that is permanently installed ensuring a light intensity of at least 100 lux on the control devices and at 1 m above the floor at any point not less than 100 mm from any wall.

NOTE — Depending on the configuration of the car, the handrail, tip-up seat, etc., can generate shadow that can be ignored.

The light meter should be oriented towards the strongest light source when taking lux level readings.

5.4.10.2 There shall be at least two lamps connected in parallel.

NOTE — In this context, lamp is understood to mean the individual light source, for example, bulb, fluorescent tube, etc.

5.4.10.3 The car shall be continuously illuminated except when the car is parked and the doors are closed.

Free Standard provided by BIS via BSB Edge Private Limited to Akshay Chaudhary - Chennai(akshay.chdary@gmail.com) 136.238.2.51 [for non-commercial use only].

5.4.10.4 There shall be emergency lights with an automatically rechargeable emergency supply, which is capable of ensuring a lighting intensity of at least 20 lux for 1 h:

a) at each alarm initiation device in the car and on the car roof;
b) in the centre of the car, 1 m above the floor;
c) in the centre of the car roof, 1 m above the floor.

This lighting shall come on automatically upon failure of the normal lighting supply.

5.4.11 *Counterweight and Balancing Weight*

5.4.11.1 *General*

The use of a balancing weight is defined in **5.9.2.1.1**.

5.4.11.2 If the counterweight or the balancing weight incorporates filler weights, metal or non-metal, they shall be carried in a single frame. Means shall be provided to retain the sections in place and prevent displacement. In case of non-metallic filler weights, the sections shall be totally enclosed in metallic coverings. Alternatively, the non-metallic filler weights which are covered from sides by metallic coverings shall be properly supported at bottom of the lowermost filler weight and top of the topmost filler weight in the frame over the entire horizontal surface of the filler weights by metal plates of adequate thickness. Where tie rods are used, minimum of two shall be provided, passing through all sections. The factor of safety of steel frame members and the tie rods shall not be less than 5.

5.4.11.3 Pulleys fixed to the counterweight or to the balancing weight shall have protection according to **5.5.7**.

5.5 Suspension Means, Compensation Means and Related Protection Means

5.5.1 *Suspension Means*

5.5.1.1 Cars, counterweights or balancing weights shall be suspended from steel wire ropes, or elastomeric coated alternative suspension means, such as Coated Steel Belts (CSBs) as per Annex H.

Chains shall not be used for suspension of a lift.

5.5.1.2 The ropes/CSBs shall correspond to the following requirements:

a) the nominal diameter of the ropes shall be at least 8 mm.
b) the tensile strength of the wires and the other characteristics (construction, extension, ovality, flexibility, tests, etc.) of ropes/CSBs shall be as specified in ISO 4344 or Annex H respectively.

5.5.1.3 For car or counterweight of any electric lift (traction and positive drive) or hydraulic lift, the number of independent suspension ropes shall not be less than four for 8 mm diameter ropes, and shall not be less than three for 10 mm and above diameter ropes.

Elastomeric coated alternative suspension means, such as Coated Steel Belts (CSBs) used shall comply with Annex H. Minimum two CSBs shall be used. Each lift shall be provided with permanently mounted detection device or mechanism which will bring the elevator to stop in case of elongation or breakage of any belt. The device shall not be of automatic reset type and shall require intervention of competent person to reset the same.

For hydraulic lifts, the minimum quantity of the ropes as defined above shall be applicable per indirect acting jack, and for the connection between car and any balancing weight.

NOTE — Where reeving is used, the number to take into account is that of the ropes/CSBs, and not the falls.

5.5.1.4 Suspension means shall be independent.

5.5.2 *Sheave, Pulley, Drum and Rope Diameter Ratios, Rope/CSB Terminations*

5.5.2.1 The ratio between the pitch diameter of sheaves, pulleys or drums and the nominal diameter of the suspension ropes or diameter of steel cord in case of CSBs shall be at least 40, regardless of the number of strands of the suspension ropes or CSBs.

5.5.2.2 The safety factor of the suspension means shall not be less than:

a) 12 in the case of traction drive with three ropes or more;
b) This sub clause number has not been used;
c) 12 in the case of drum drive and hydraulic lifts with ropes;
d) This sub clause number has not been used
e) 12 in case of traction drives with two CSB's or more.

In addition, the safety factor of suspension means for traction lifts shall not be less than that calculated according to **5.12** of IS 17900 (Part 2).

The safety factor is the ratio between the minimum breaking load of one rope or CSB, in newtons, and the maximum force in this rope or CSB, in newtons, when the car is stationary at the lowest landing, with its rated load.

For positive and hydraulic drives, the safety factor of balancing weight ropes or CSBs shall be calculated as above, in relation to the rope/CSB force due to the weight of the balancing weight.

Free Standard provided by BIS via BSB Edge Private Limited to Akshay Chaudhary - Chennai(akshay.chdary@gmail.com) 136.238.2.51 [for non-commercial use only].

5.5.2.3 The junction between the rope/CSB and the rope/CSB termination, according to **5.5.2.3.1**, shall be able to resist at least 80 percent of the minimum breaking load of the rope/CSB.

5.5.2.3.1 The ends of the ropes/CSB's shall be fixed to the car, counterweight or balancing weight, or suspension points of the dead parts of reeved ropes/CSB's by means of self-tightening wedge type sockets, ferrule secured eyes, or swage terminals.

5.5.2.3.2 The fixing of the ropes/CSB's on drums shall be carried out using a system of blocking with wedges, or using at least two clamps.

5.5.2.4 This clause number has not been used.

5.5.3 *Rope or CSB Traction*

NOTE — Examples of design considerations are given in **5.11** of IS 17900 (Part 2).

Rope or CSB traction shall be such that the following three conditions are fulfilled:

a) the car shall be maintained at floor level without slip when loaded to 125 percent, as per **5.4.2.1** or **5.4.2.2**;

b) it shall be ensured that any emergency braking causes the car, whether empty or with rated load, to decelerate to a speed which is lower than or equal to the speed for which the buffers are designed, including reduced stroke buffer;

c) it shall not be possible to raise the empty car, or the counterweight, to a dangerous position if either the car or the counterweight is stalled; either:

   1) the ropes or CSBs shall slip on the traction sheave; or

   2) the machine shall be stopped by an electric safety device in conformity with **5.11.2**.

NOTE — Some lifting of the car or counterweight is acceptable, provided there is no risk of crushing at the extremes of travel, or falling back of the car, or counterweight causing impact forces on the means of suspension, and excessive retardation of the car.

5.5.4 *Winding Up of Ropes for Positive Drive Lifts*

5.5.4.1 The drum, which can be used in the conditions laid down in **5.9.2.1.1 b)**, shall be helically grooved and the grooves shall be suited to the ropes used.

5.5.4.2 When the car rests on its fully compressed buffers, one and a half turns of rope shall remain in the grooves of the drum.

5.5.4.3 There shall only be one layer of rope wound on the drum.

5.5.4.4 The angle of deflection (fleet angle) of the ropes in relation to the grooves shall not exceed 4.

5.5.5 *Distribution of Load between the Suspension Means*

5.5.5.1 An automatic device shall be provided for equalizing the tension of suspension means at least at one of their ends.

5.5.5.1.1 This clause number has not been used.

5.5.5.1.2 This clause number has not been used.

5.5.5.2 If springs are used to equalize the tension, they shall work in compression.

5.5.5.3 Protection in the case of abnormal extension, slack suspension means shall be provided as follows:

a) This Sub clause number has not been used.

b) For positive drive lifts and hydraulic lifts, if the risk of slack suspension means exists, an electric safety device in conformity with **5.11.2** shall cause the machine to stop when slack occurs.

After stopping, normal operation shall be prevented.

For hydraulic lifts with two or more jacks, this requirement applies for each suspension set.

5.5.5.4 The devices for adjusting the length of suspension means shall be made in such a way that these devices cannot work themselves loose after adjustment.

5.5.6 *Compensation Means*

5.5.6.1 Compensation for the weight of the suspension means in order to ensure adequate traction or hoisting motor power shall be provided in accordance with the following conditions:

a) for rated speeds not exceeding 3.0 m/s, means such as chains, ropes or belts may be used;

b) for rated speeds exceeding 3.0 m/s, compensation ropes shall be provided;

c) for lifts whose rated speed exceeds 3.5 m/s there shall be, in addition, an anti-rebound device;

   The operation of the anti-rebound device shall initiate the stopping of the lift machine by means of an electric safety device in conformity with **5.11.2**;

d) for rated speeds exceeding 1.75 m/s, compensation means without tensioning shall be guided at the vicinity of the loop.

5.5.6.2 Whenever compensation ropes are used, the following shall apply:

a) compensating ropes shall be as specified in ISO 4344;

b) tensioning pulleys shall be used;

c) the ratio between the pitch diameter of the tensioning pulleys and the nominal diameter of the compensating ropes shall be at least 30;

Free Standard provided by BIS via BSB Edge Private Limited to Akshay Chaudhary - Chennai(akshay.chdary@gmail.com) 136.238.2.51 [for non-commercial use only].

d) tensioning pulleys shall have protection according to **5.5.7**;

e) the tension shall be provided by gravity;

f) the tension shall be checked by an electric safety device in conformity with **5.11.2**.

5.5.6.3 Compensation means, for example, ropes, chains, belts and their terminations, shall be capable of withstanding, with a safety factor of 5, any static forces to which the means is subjected.

The maximum suspended weight of compensation means, with car or counterweight at the top of its travel, and one-half total weight of tension sheave assembly, where used, shall be included.

5.5.7 *Protection for Sheaves and Pulleys*

5.5.7.1 For sheaves, pulleys, over speed governors, tension weight pulleys, provisions shall be made according to Table 10 to avoid:

a) body injury;

b) the ropes leaving the pulleys, if slack;

c) the introduction of objects between ropes and pulleys.

5.5.7.2 The devices used shall be constructed so that the rotating parts are visible, and do not hinder examination and maintenance operation. If they are perforated, the gaps shall comply with Table 4 of IS 16814.

Table 10 Protection for Sheaves and Pulleys

(*Clause* 5.5.7.1)

Sl No.	Location of Sheaves and Pulleys			Risk According to 5.5.7.1		
				a	b	c
(1)	(2)	(3)		(4)	(5)	(6)
i)	At the car	on the roof		x	x	x
ii)		under the floor			x	x
iii)	On the counterweight/balancing weight				x	x
iv)	In machine and pulley rooms			x[a]	x	x[b]
v)	In the well	Headroom	above car	x	x	
vi)			beside car	x	x	
vii)		Between pit and headroom			x	x[b]
viii)		Pit		x	x	x
ix)	Jack	Extending upwards		x[a]	x	
x)		Extending downwards			x	x[b]
xi)		With mechanical synchronizing means		x	x	x

x The risk shall be taken into account.

[a] Protection shall be nip guards as a minimum, preventing accidental access to areas where ropes enter or leave the sheaves and pulleys (*see* **Fig. 18**).

[b] Required only if the ropes are entering the traction sheave or the pulley horizontally or at any angle above the horizontal, up to a maximum of 90°.

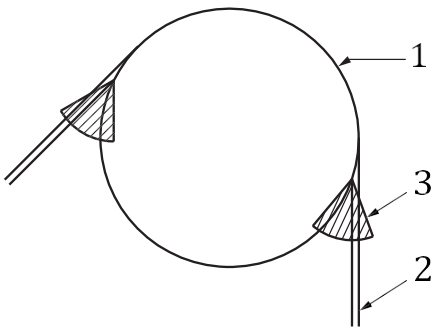

Key

1 pulley

2 rope, belt

3 nip guard

FIG. 18 EXAMPLE OF NIP GUARD

Free Standard provided by BIS via BSB Edge Private Limited to Akshay Chaudhary - Chennai(akshay.chdary@gmail.com) 136.238.2.51 [for non-commercial use only].

The dismantling shall be necessary only in the following cases:

a) replacement of a rope;
b) replacement of a pulley;
c) re-cutting of the grooves.

The devices for preventing the ropes from leaving the grooves of pulleys shall include one retainer near the points where the ropes enter and leave the pulleys, and at least one intermediate retainer if more than 60° of the angle of wrap is arranged below the horizontal axis of the pulley and the total angle of wrap is more than 120° (*see* **Fig. 19**).

5.5.8 *Traction Sheave and Pulleys in the Well*

Traction sheaves and pulleys may be installed in the well above the lowest landing level under the following conditions:

a) there shall be retaining devices to prevent diverter pulleys from falling in the event of a mechanical failure. These devices shall be able to support the weight of the pulley and the suspended loads;
b) if traction sheaves, pulleys are placed in the vertical projection of the car, then clearances in the headroom shall be according to **5.2.5.7**.

5.6 Precautions against Free Fall, Excessive Speed, Unintended Car Movement and Creeping of the Car

5.6.1 *General Provisions*

5.6.1.1 Devices, or combinations of devices and their actuation shall be provided to prevent the car from:

a) free fall;
b) excessive speed, either downwards, or up and down in the case of traction lifts;
c) unintended movement, with open doors;
d) in the case of hydraulic lifts, creeping from a landing level.

5.6.1.2 For traction and positive drive lifts, the protection means in Table 11 shall be provided.

5.6.1.3 For hydraulic lifts, devices, or combinations of devices and their actuation, shall be provided in accordance with **Table 12**. In addition, protection

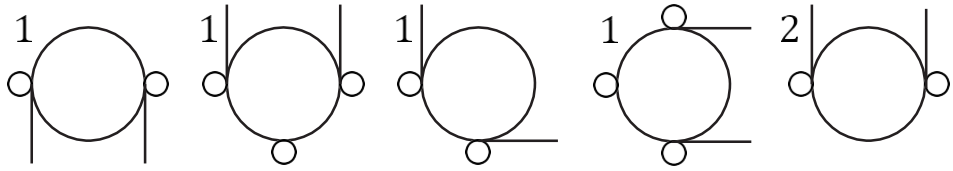

Key

1 in conformance with **5.5.7.2**.
2 not in conformance with **5.5.7.2**.

FIG. 19 EXAMPLES OF ARRANGEMENTS OF ROPE RETAINERS

Table 11 Protection Means for Traction and Positive Drive Lifts

(*Clause* 5.6.1.2)

Sl No.	Hazardous Situation	Protection Means	Tripping Means
(1)	(2)	(3)	(4)
i)	Free fall and excessive speed in down direction of car	Safety gear (**5.6.2.1**)	Overspeed governor (**5.6.2.2.1**)
ii)	Free fall of counterweight or balancing weight in the case of **5.2.5.4**	Safety gear (**5.6.2.1**)	Overspeed governor (**5.6.2.2.1**), or for rated speeds not exceeding 1 m/s: a) tripping by breakage of suspension means (**5.6.2.2.2**); or b) tripping by safety rope (**5.6.2.2.3**).
iii)	Excessive speed in up direction (traction lifts only)	Ascending car overspeed protection means (**5.6.6**)	Included in **5.6.6**
iv)	Unintended car movement with open doors	Protection against unintended car movement (**5.6.7**)	Included in **5.6.7**

Free Standard provided by BIS via BSB Edge Private Limited to Akshay Chaudhary - Chennai(akshay.chdary@gmail.com) 136.238.2.51 [for non-commercial use only].

Table 12 Protection Means for Hydraulic Lifts

(*Clauses* 5.6.1.3 *and* 5.12.1.10)

	Type of Lifts	Alternative Combinations to be Selected	Precautions against creeping in addition to re-levelling (5.12.1.1.4)		
			Tripping of Safety Gear (5.6.2.1) by Downward Movement of the Car (5.6.2.2.4)	Pawl Device (5.6.5)	Electrical Anti-creep System (5.12.1.10)
Precautions against free fall or descent with excessive speed	Direct acting lifts	Safety gear (**5.6.2.1**), tripped by overspeed governor (**5.6.2.2.1**)	X	X	X
		Rupture valve (**5.6.3**)		X	X
		Restrictor (**5.6.4**)		X	
	Indirect acting lifts	Safety gear (**5.6.2.1**), tripped by overspeed governor (**5.6.2.2.1**)	X	X	X
		Rupture valve (**5.6.3**) plus safety gear (**5.6.2.1**) tripped by breakage of suspension means (**5.6.2.2.2**) or by safety rope (**5.6.2.2.3**)	X	X	X
		Restrictor (**5.6.4**) plus safety gear (**5.6.2.1**) tripped by breakage of suspension means (**5.6.2.2.2**) or by safety rope (**5.6.2.2.3**)	X	X	

against unintended movement according to **5.6.7** shall be provided.

5.6.2 *Safety Gear and its Tripping Means*

5.6.2.1 *Safety gear*

5.6.2.1.1 *General provisions*

5.6.2.1.1.1 The safety gear shall be capable of operating in the downward direction and stopping a car carrying the rated load, or a counterweight or balancing weight at the tripping speed of the overspeed governor, or if the suspension devices break, by gripping the guide rails, and of holding the car, counterweight or balancing weight there.

A safety gear which has the additional function of operating in the upward direction may be used in accordance with **5.6.6.**

5.6.2.1.1.2 The safety gear is regarded as a safety component and shall be verified according to the requirements in **5.3** of IS 17900 (Part 2).

5.6.2.1.1.3 A data plate shall be fixed on safety gear, indicating:

a) the name of the manufacturer of the safety gear;
b) the type of safety gear;
c) if adjustable, the safety gear shall be marked with:
   1) the permissible load range; or
   2) the adjustment parameter, if the relationship with the load range is specified in the instruction manual.

5.6.2.1.2 *Conditions of use for different types of safety gear* **5.6.2.1.2.1** The car safety gear:

a) shall be of the progressive type; or
b) may be of the instantaneous type, if the rated speed of the lift does not exceed 0.63 m/s.

For hydraulic lifts, instantaneous type safety gears other than of the captive roller type (which are not tripped by an over speed governor) shall only be used if the tripping speed of the rupture valve, or the maximum speed of the restrictor (or one-way restrictor), does not exceed 0.80 m/s.

5.6.2.1.2.2 If the car or counterweight or balancing weight carries several safety gears, they shall all be of the progressive type.

5.6.2.1.2.3 The safety gear of the counterweight or balancing weight shall be of the progressive type, if the rated speed exceeds 1 m/s. Otherwise, the safety gear may be of the instantaneous type.

Free Standard provided by BIS via BSB Edge Private Limited to Akshay Chaudhary - Chennai(akshay.chdary@gmail.com) 136.238.2.51 [for non-commercial use only].

5.6.2.1.3 *Retardation*

For progressive safety gear, the average retardation in the case of free fall of the car with rated load, or the counterweight or the balancing weight, shall lie between 0.2 g_n and 1 g_n.

5.6.2.1.4 *Release*

5.6.2.1.4.1 The release and automatic reset of a safety gear on the car, counterweight or balancing weight shall only be possible by raising the car, counterweight or balancing weight.

5.6.2.1.4.2 The release of the safety gear shall be possible at all load conditions up to the rated load:

a) by means defined for emergency operations (**5.9.2.3** or **5.9.3.9**); or

b) in application of procedures available on site (**7.2.2**).

5.6.2.1.4.3 After release of the safety gear, it shall require the intervention of a competent maintenance person to return the lift to service.

NOTE — The activation of the main switch is not sufficient by itself to allow the lift to be returned to service.

5.6.2.1.5 *Electrical checking*

When the car safety gear is engaged, an electric safety device in conformity with **5.11.2**, mounted on the car, shall initiate the stopping of the machine before or at the moment of safety gear operation.

5.6.2.1.6 *Constructional conditions*

5.6.2.1.6.1 Jaws or blocks of safety gears shall not be used as guide shoes.

5.6.2.1.6.2 If the safety gear is adjustable, the final setting shall be sealed in such a way to prevent re-adjustment without breaking the seal.

5.6.2.1.6.3 Accidental tripping of the safety gear shall be prevented as far as possible, for example, by sufficient clearance to guide rails to allow horizontal movements of guide shoes.

5.6.2.1.6.4 Safety gears shall not be tripped by devices, which operate electrically, hydraulically or pneumatically.

5.6.2.1.6.5 When a safety gear is tripped, either by the breakage of the suspension means or by a safety rope, it shall be assumed that the safety gear is tripped at a speed corresponding to the tripping speed of an appropriate over speed governor.

5.6.2.2 *Means of tripping the safety gear*

5.6.2.2.1 *Tripping by overspeed governor*

5.6.2.2.1.1 *General provisions*

The following shall be satisfied:

a) tripping of the overspeed governor for the safety gear shall occur at a speed at least equal to 115 percent of the rated speed, and less than:

   1) 0.8 m/s for instantaneous safety gears, except for the captive roller type; or

   2) 1 m/s for safety gears of the captive roller type; or

   3) 1.50 m/s for progressive safety gear used for rated speeds not exceeding 1.0 m/s; or

   4) for progressive safety gear for rated speeds exceeding 1.0 m/s [*see* **Formula (6)**]:

$$1.25 \times v + \frac{0.25}{v} \qquad \text{... (6)}$$

   where v is expressed in metres per second.

   For lifts where the rated speed exceeds 1 m/s, it is recommended to choose a tripping speed as close as possible to the value required in 4).

   For lifts with low rated speed, it is recommended to choose a tripping speed as close as possible to the lower limit indicated in a);

b) overspeed governors using only traction to produce the tripping force shall have grooves which:

   1) have been submitted to an additional hardening process; or

   2) have an undercut in accordance with **5.11.2.3.1** of IS 17900 (Part 2).

c) the direction of rotation, corresponding to the operation of the safety gear, shall be marked on the over speed governor;

d) the tensile force in the overspeed governor rope produced by the governor, when tripped, shall be at least the greater of the following two values:

   1) twice that necessary to engage the safety gear; or

   2) 300 N.

5.6.2.2.1.2 *Response time*

In order to ensure tripping of the overspeed governor before a dangerous speed can be reached (*see* **5.3.2.3.1** of IS 17900 (Part 2), the maximum distance between tripping points on the governor shall not exceed 250 mm related to the movement of the governor rope.

5.6.2.2.1.3 *Overspeed governor ropes*

The rope of an overspeed governor shall satisfy the following conditions:

a) the overspeed governor shall be driven by a wire rope as specified in ISO 4344;

Free Standard provided by BIS via BSB Edge Private Limited to Akshay Chaudhary - Chennai(akshay.chdary@gmail.com) 136.238.2.51 [for non-commercial use only].

b) the minimum breaking load of the rope shall be related by a safety factor of at least 8 to the tensile force produced in the rope of the overspeed governor when tripped, taking into account a friction factor μ_{max} equal to 0.2 for traction type overspeed governor;

c) the ratio between the pitch diameter of the pulleys for the overspeed governor rope and the nominal rope diameter shall be at least 30;

d) the overspeed governor rope shall be tensioned by a pulley with a tensioning weight. This pulley or its tensioning weight shall be guided;

e) the overspeed governor may be a part of the tensioning device provided that its tripping values are not altered by the movement of the tensioning device;

f) during the engagement of the safety gear, the overspeed governor rope and its terminations shall remain intact, even in the case of a braking distance greater than normal;

g) the overspeed governor rope shall be easily detachable from the safety gear.

5.6.2.2.1.4 *Accessibility*

The overspeed governor shall meet the following conditions:

a) the overspeed governor shall be accessible and reachable for inspection and maintenance;

b) if located in the well, the overspeed governor shall be accessible and reachable from outside the well;

c) the requirement in b) does not apply if the following three conditions are fulfilled:

   1) the tripping of the overspeed governor according to **5.6.2.2.1.5** is effected by means of a remote control, except cableless, from outside the well, whereby an involuntary tripping is not effected and the actuation device is not accessible to unauthorized persons;

   2) the overspeed governor is accessible from the roof of the car or from the pit for inspection and maintenance;

   3) the overspeed governor returns after tripping automatically into the normal position, as the car, counterweight or balancing weight is moved in the upward direction.

However, the electrical parts may return into the normal position by remote control from the outside of the well. This shall not influence the normal function of the overspeed governor.

5.6.2.2.1.5 *Possibility of tripping the overspeed governor*

During checks or tests, it shall be possible to operate the safety gear at a lower speed than that indicated in **5.6.2.2.1.1 a)**, by tripping the overspeed governor in a safe way.

If the overspeed governor is adjustable, the final setting shall be sealed in such a way to prevent re-adjustment without breaking the seal.

5.6.2.2.1.6 *Electrical checking*

The following shall be met:

a) the overspeed governor or another device shall, by means of an electric safety device in conformity with **5.11.2**, initiate the stopping of the lift machine before the car speed, either up or down, reaches the tripping speed of the governor.

   However, for rated speeds not exceeding 1 m/s, this device may operate at the latest at the moment when the tripping speed of the governor is reached;

b) if, after release of the safety gear (**5.6.2.1.4**), the overspeed governor does not automatically reset itself, an electric safety device in conformity with **5.11.2** shall prevent the starting of the lift while the overspeed governor is not in the reset position. This device shall, however, be made inoperative in the case provided for in **5.12.1.6.1 d) 2)**;

c) the breakage or excessive rope stretch of the governor rope shall cause the motor to stop by means of an electric safety device in conformity with **5.11.2**.

5.6.2.2.1.7 The overspeed governor is regarded as a safety component and shall be verified according to the requirements in **5.4** of IS 17900 (Part 2).

5.6.2.2.1.8 A data plate shall be fixed on the overspeed governor, indicating:

a) the name of the manufacturer of the overspeed governor;

b) the type of the overspeed governor;

c) the actual tripping speed for which it has been adjusted.

5.6.2.2.2 *Tripping by breakage of suspension means*

When the safety gear is tripped by the breakage of the suspension means, the following applies:

a) the tensile force exerted by the actuating mechanism shall be at least the greater of the following two values:

   1) twice that necessary to engage the safety gear; or

   2) 300 N.

b) when springs are used for the tripping of the safety gear, they shall be of the guided compression type.

c) it shall be possible for a test of the safety gear, and its actuating mechanism, to be made without the need to enter the well during the test.

Free Standard provided by BIS via BSB Edge Private Limited to Akshay Chaudhary - Chennai(akshay.chdary@gmail.com) 136.238.2.51 [for non-commercial use only].

To this end, a means shall be provided so that it is possible, while the counterweight (if applicable)/car is descending (under normal operation), to activate the safety gear by a loss of tension in the suspension rope.

Where the means provided is mechanical, the force required to operate it shall not exceed 400 N. After these tests, it shall be checked that no distortion or deterioration which could impair the use of the lift has occurred.

NOTE — It is acceptable for the means to be stored within the well and moved outside when a test is performed.

5.6.2.2.3 *Tripping by safety rope*

When the safety gear is tripped by a safety rope, the following applies:

a) the tensile force exerted by the safety rope shall be at least the greater of the following two values:
   1) twice that necessary to engage the safety gear; or
   2) 300 N.
b) the safety rope shall be in conformity with **5.6.2.2.1.3**;
c) the rope shall be tensioned by gravity or by springs that do not affect the safe function, if broken;
d) during the engagement of the safety gear, the safety rope and its terminations shall remain intact, even in the case of a braking distance greater than normal;
e) the breakage or slackening of the safety rope shall cause the machine to stop by means of an electric safety device (**5.11.2**);
f) pulleys used for carrying the safety rope shall be mounted independently of any shaft or pulley assembly that carries the suspension ropes or chains;
g) protection devices shall be provided in accordance with **5.5.7.1**.

5.6.2.2.4 *Tripping by downward movement of the car*

5.6.2.2.4.1 *Tripping by rope*

Tripping by rope of the safety gear shall be actuated under the following conditions:

a) after a normal stop, a rope which satisfies **5.6.2.2.1.3**, attached to the safety gear, shall be blocked with a force defined in **5.6.2.2.3 a)** (for example, the overspeed governor rope);
b) the rope blocking mechanism shall be released during normal movement of the car;
c) the rope blocking mechanism shall be actuated by guided compression spring(s) and/or by gravity;
d) rescue operation shall be possible in all circumstances;
e) an electric device as per **5.11.2**, associated with the rope blocking mechanism shall cause stopping of the machine at the latest at the moment of blocking of the rope, and shall prevent any further normal downward movement of the car;
f) precautions shall be taken to avoid involuntary tripping of the safety gear by the rope in case of disconnection of the electric power supply during a downward movement of the car;
g) the design of the system of rope and rope blocking mechanism shall be such that no damage is possible during the engagement of the safety gear;
h) the design of the system of rope and rope blocking mechanism shall be such that no damage is possible by an upward movement of the car.

5.6.2.2.4.2 *Tripping by lever*

Tripping by lever of the safety gear shall be actuated under the following conditions:

a) after the normal stopping of the car, a lever attached to the safety gear shall be extended into a position to engage with fixed stops, which are located at each landing;
b) the lever shall be retracted during the normal movement of the car;
c) the movement of the lever to the extended position shall be effected by guided compression spring(s) and/or by gravity;
d) emergency operation shall be possible in all circumstances;
e) precautions shall be taken to avoid involuntary tripping of the safety gear by the lever, in case of the disconnection of the electric power supply during a downward movement of the car;
f) the design of the lever and stops system shall be such that no damage is possible:
   1) during the engagement of the safety gear, even in the case of longer braking distances;
   2) by an upward movement of the car.
g) an electric device shall prevent any normal movement of the car when the tripping lever is not in its extended position after normal stopping, the car doors shall be closed and the lift shall be taken out of operation;
h) an electric safety device, in conformity with **5.11.2**, shall prevent any normal down movement of the car when the tripping lever is not in the retracted position.

5.6.3 *Rupture Valve*

5.6.3.1 The rupture valve shall be capable of stopping the car in downward movement, and of maintaining it stationary. The rupture valve shall be tripped at the

Free Standard provided by BIS via BSB Edge Private Limited to Akshay Chaudhary - Chennai(akshay.chdary@gmail.com) 136.238.2.51 [for non-commercial use only].

latest when the speed reaches a value equal to rated speed downwards, v_d, plus 0.30 m/s.

The rupture valve shall be selected so that the average retardation, a, lies between 0.2 g_n and 1 g_n.

Retardation of more than 2.5 g_n shall not last longer than 0.04 s.

The average retardation, a, can be evaluated by **Formula (7)**:

$$a = \frac{Q_{max} \times r}{6 \times A \times n \times t_d} \quad \text{... (7)}$$

where

A	is the area of jack where pressure is acting, expressed in square centimetres;
n	is the number of parallel acting jacks with one rupture valve;
Q_{max}	is the maximum flow, expressed in litres per minute;
r	is the reeving factor;
t_d	is the braking time, expressed in seconds.

5.6.3.2 The rupture valve shall be accessible for adjustment and inspection directly from the car roof, or from the pit.

5.6.3.3 The rupture valve shall be:

a) integral with the cylinder;
b) directly and rigidly flange-mounted;
c) placed close to the cylinder and connected to it by means of short rigid pipes, having welded, flanged or threaded connections; or
d) connected directly to the cylinder by threading.

The rupture valve shall be provided with a thread ending with a shoulder. The shoulder shall butt up against the cylinder.

Other types of connections, such as compression fittings or flared fittings, are not permitted between the cylinder and the rupture valve.

5.6.3.4 On lifts with several jacks, operating in parallel, one common rupture valve may be used. Otherwise, the rupture valves shall be interconnected to cause simultaneous closing, in order to prevent the floor of the car from inclining by more than 5 percent from its normal position.

5.6.3.5 The rupture valve shall be calculated as the cylinder.

5.6.3.6 If the closing speed of the rupture valve is controlled by a restricting device, a filter shall be located as near as possible before this device.

5.6.3.7 There shall be, in the machinery space, a means which can be manually operated from outside of the well, allowing to reach the tripping flow of the rupture valve without overloading the car. The means shall be safeguarded against unintentional operation. It shall not neutralize the safety devices adjacent to the jack.

5.6.3.8 The rupture valve is regarded as a safety component and shall be verified according to the requirements in **5.9** of IS 17900 (Part 2).

5.6.3.9 A data plate shall be fixed on the rupture valve, indicating the:

a) name of the manufacturer of the rupture valve;
b) tripping flow for which it has been adjusted.

5.6.4 *Restrictors*

5.6.4.1 In the case of a major leakage in the hydraulic system, the restrictor shall prevent the speed of the car with rated load in downward movement exceeding the rated speed downwards, *v*d, by more than 0.30 m/s.

5.6.4.2 The restrictor shall be accessible for inspection directly from the car roof or from the pit.

5.6.4.3 The restrictor shall be:

a) integral with the cylinder;
b) directly and rigidly flange-mounted;
c) placed close to the cylinder and connected to it by means of short rigid pipes, having welded, flanged or threaded connections; or
d) connected directly to the cylinder by threading.

The restrictor shall be provided with a thread ending with a shoulder. This shall butt up against the cylinder.

Other types of connections such as compression fittings or flared fittings are not permitted between the cylinder and the restrictor.

5.6.4.4 The restrictor shall be calculated as the cylinder.

5.6.4.5 In the machinery space, there shall be a means which can be manually operated from outside of the well, allowing to reach the tripping flow of restrictor without overloading the car. The means shall be safeguarded against unintentional operation. In no case shall it neutralize the safety devices adjacent to the jack.

5.6.4.6 Only the one-way restrictor where mechanical moving parts are used is regarded as a safety component and shall be verified according to the requirements in **5.9** of IS 17900 (Part 2).

5.6.4.7 A data plate shall be fixed on the one-way restrictor where mechanical moving parts are used (**5.6.4.6**), indicating the:

a) name of the manufacturer of the one-way restrictor;

Free Standard provided by BIS via BSB Edge Private Limited to Akshay Chaudhary - Chennai(akshay.chdary@gmail.com) 136.238.2.51 [for non-commercial use only].

b) tripping flow for which it has been adjusted.

5.6.5 *Pawl Device*

5.6.5.1 The pawl device shall operate only in the downward direction, and be capable of stopping the car, with a load according to **Table 6** (**5.4.2.1**), and maintaining it stationary on fixed stops for:

a) lifts provided with a restrictor or one-way restrictor: from a speed of v_d + 0.30 m/s; or
b) all other lifts: from a speed equal to 115 percent of the downwards rated speed, v_d.

5.6.5.2 At least one electrically retractable pawl shall be provided, designed in its extended position to stop the downward moving car against fixed supports.

5.6.5.3 For each landing, supports shall be provided and arranged at two levels to:

a) prevent the car from sinking below the landing level by more than 0.12 m;
b) stop the car at the lower end of the unlocking zone.

5.6.5.4 The movement of the pawl(s) to the extended position shall be effected by guided compression spring(s) and/or gravity.

5.6.5.5 The supply to the electric retraction device shall be interrupted when the machine is stopped.

5.6.5.6 The design of the pawl(s) and supports shall be such that, whatever the position of the pawl, the car cannot be stopped or any damage caused during the upward movement.

5.6.5.7 A buffering system shall be incorporated in the pawl device (or in the fixed supports).

5.6.5.7.1 Buffers shall be of the following types:

a) energy accumulation; or
b) energy dissipation.

5.6.5.7.2 The requirements of **5.8.2** apply by analogy.

In addition, the buffer shall maintain the car stationary at a distance not exceeding 0.12 m below any loading level when carrying the rated load.

5.6.5.8 When several pawls are provided, precautions shall be taken to ensure that all pawls engage on their respective supports, even in the case of disconnection of the electrical power supply during a downward movement of the car.

5.6.5.9 An electric safety device which complies with the requirements of **5.11.2** shall prevent any downward movement of the car when a pawl is not in the retracted position.

5.6.5.9.1 The pawl device shall be checked electrically in the extended position when the car stops.

5.6.5.9.2 If the pawl device is not in the extended position:

a) an electric device, which complies with the requirements of **5.11.2.2**, shall prevent the opening of the doors and any normal movement of the car;
b) the pawl device shall be fully retracted and the car shall be sent to the lowest level served by the lift;
c) the doors shall open to allow persons to leave the car and the lift shall be taken out of operation.

Return to normal operation shall require the intervention of a competent maintenance person.

5.6.5.10 If energy dissipation buffers [**5.6.5.7.1 b)**] are used, an electric safety device in conformity with

5.11.2 shall immediately initiate stopping of the machine if the car is travelling downwards and prevent starting of the machine in downward motion, when the buffer is not in its normal extended position. The power supply shall be interrupted according to **5.9.3.4.3**.

5.6.6 *Ascending Car Overspeed Protection Means*

5.6.6.1 The means, comprising speed monitoring and speed reducing elements, shall detect overspeed of the ascending car (*see* **5.6.6.10**) and cause the car to stop, or at least reduce its speed to that for which the counterweight buffer is designed. The means shall be active in:

a) normal operation;
b) manual rescue operation, unless there is a direct visual observation of the machine or the speed is limited by other means to less than 115 percent of the rated speed;
c) automatic rescue operation.

5.6.6.2 The means shall be capable of performing as required in **5.6.6.1** without assistance from any lift component that controls the speed or retardation, or stops the car during normal operation, unless there is built-in redundancy and correct operation is self-monitored.

In the case of using the machine brake, self-monitoring can include verification of correct lifting or dropping of the mechanism or verification of the braking force. If a failure is detected, the next normal start of the lift shall be prevented.

Self-monitoring is subject to type examination.

A mechanical linkage to the car, whether or not such linkage is used for any other purpose, may be used to assist in this performance.

5.6.6.3 The means shall not allow a retardation of the empty car in excess of 1 g_n during the stopping phase.

Free Standard provided by BIS via BSB Edge Private Limited to Akshay Chaudhary - Chennai(akshay.chdary@gmail.com) 136.238.2.51 [for non-commercial use only].

5.6.6.4 The means shall act on:

a) the car;
b) the counterweight;
c) the rope system (suspension or compensating);
d) the traction sheave; or
e) the same shaft as the traction sheave, provided that the shaft is only statically supported in two points.

5.6.6.5 The means shall operate an electric safety device in conformity with **5.11.2** if it is engaged.

5.6.6.6 The release of the means shall not require access to the well.

5.6.6.7 After the release of the means, the return of the lift to normal operation shall require the intervention of a competent maintenance person.

5.6.6.8 After its release, the means shall be in a condition to operate.

5.6.6.9 If the means requires external energy to operate, the absence of energy shall cause the lift to stop and keep it stopped. This does not apply for guided compression springs.

5.6.6.10 The speed monitoring element of the lift, which causes the ascending car overspeed protection means to actuate, shall be, either:

a) an overspeed governor conforming to the requirements of **5.6.2.2.1**; or
b) a device conforming to;
   1) **5.6.2.2.1.1 a)** or **5.6.2.2.1.6** regarding the tripping speed;
   2) **5.6.2.2.1.2** regarding the response time;
   3) **5.6.2.2.1.4** regarding accessibility;
   4) **5.6.2.2.1.5** regarding the possibility of tripping;
   5) **5.6.2.2.1.6 b)** regarding the electrical checking.

and where equivalence to **5.6.2.2.1.3 a)**, **5.6.2.2.1.3 b)**, **5.6.2.2.1.3 e)**, **5.6.2.2.1.5** (for sealing) and **5.6.2.2.1.6 c)** regarding those aspects is assured at the same time.

5.6.6.11 The ascending car overspeed protection means is regarded as a safety component and shall be verified according to the requirements in **5.7** of IS 17900 (Part 2).

5.6.6.12 A data plate shall be fixed on the ascending car overspeed protection means, indicating the:

a) name of the manufacturer;
b) actual tripping speed for which it has been adjusted;
c) type of ascending car overspeed protection means.

5.6.7 *Protection against Unintended Car Movement*

5.6.7.1 Lifts shall be provided with a means to prevent or stop unintended car movement away from the landing, with the landing door not in the locked position and the car door not in the closed position, as a result of any single failure of the lift machine or drive control system on which the safe movement of the car depends.

Excluded are failures of the:

a) Suspension means;
b) the traction sheave or drum of the machine;
c) flexible hoses;
d) steel piping;
e) cylinder.

A failure of the traction sheave includes a sudden loss of traction.

No detection of the unintended car movement needs to be provided in lifts without levelling, re-levelling and preliminary operations with doors open according to **5.12.1.4**, if the stopping element is a machine brake complying with **5.6.7.3** and **5.6.7.4**.

Any slip due to the traction conditions at unintended movement stopping shall be taken into account for calculation and or verification of the stopping distance.

5.6.7.2 The means shall detect unintended movement of the car, cause the car to stop, and keep it stopped.

5.6.7.3 The means shall be capable of performing as required without assistance from any lift component that, controls the speed or retardation, stops the car or keeps it stopped during normal operation, unless there is built-in redundancy and correct operation is self-monitored.

NOTE — Machine brakes according to **5.9.2.2.2** is considered to have built-in redundancy.

In the case of using the machine brake, self-monitoring can include verification of correct lifting or dropping of the mechanism or verification of the braking force.

In the case of using two electrically commanded hydraulic valves operating in series for slowing and stopping in normal operation, self-monitoring implies separate verification of correct opening or closing of each valve under the empty car static pressure.

If a failure is detected, car and landing doors shall be closed and the normal start of the lift shall be prevented.

Self-monitoring is subject to type examination.

5.6.7.4 The stopping element of the means shall act on:

a) the car;
b) the counterweight;
c) the rope system (suspension or compensating);
d) the traction sheave;

Free Standard provided by BIS via BSB Edge Private Limited to Akshay Chaudhary - Chennai(akshay.chdary@gmail.com) 136.238.2.51 [for non-commercial use only].

e) the same shaft as the traction sheave, provided that the shaft is only statically supported in two points; or

f) the hydraulic system (including the motor/pump in up direction by isolation of the electrical supply).

The stopping element of the means, or the means keeping the car stopped may be the same as those used for:

1) preventing overspeed in down direction;
2) preventing ascending car overspeed (**5.6.6**).

The stopping elements of the means may be different for the downward direction and for the upward direction.

5.6.7.5 The means shall stop the car in a distance under the following conditions (*see* **Fig. 20**):

a) the stopping distance shall not exceed 1.20 m from the landing where the unintended car movement has been detected;

b) the vertical distance between the landing sill and the lowest part of the car apron shall not exceed 200 mm;

c) in case of enclosures according to **5.2.5.2.3**, the distance between the car sill and the lowest part of the well wall facing the car entrance shall not exceed 200 mm;

d) the vertical distance from the car sill to the landing door lintel, or from the landing sill to the car door lintel shall not be less than 1.0 m.

These values shall be obtained with any load in the car, up to 100 percent of the rated load, moving away from a standstill position at landing level.

5.6.7.6 During the stopping phase, the stopping element of the means shall not allow a retardation of the car in excess of:

a) 1 g_n for unintended movements in the upward direction with an empty car;

b) the values accepted for devices protecting against free fall in the downward direction.

5.6.7.7 The unintended movement of the car shall be detected by an electric safety device in conformity with **5.11.2** at the latest when the car leaves the unlocking zone (**5.3.8.1**).

Dimensions in millimetres

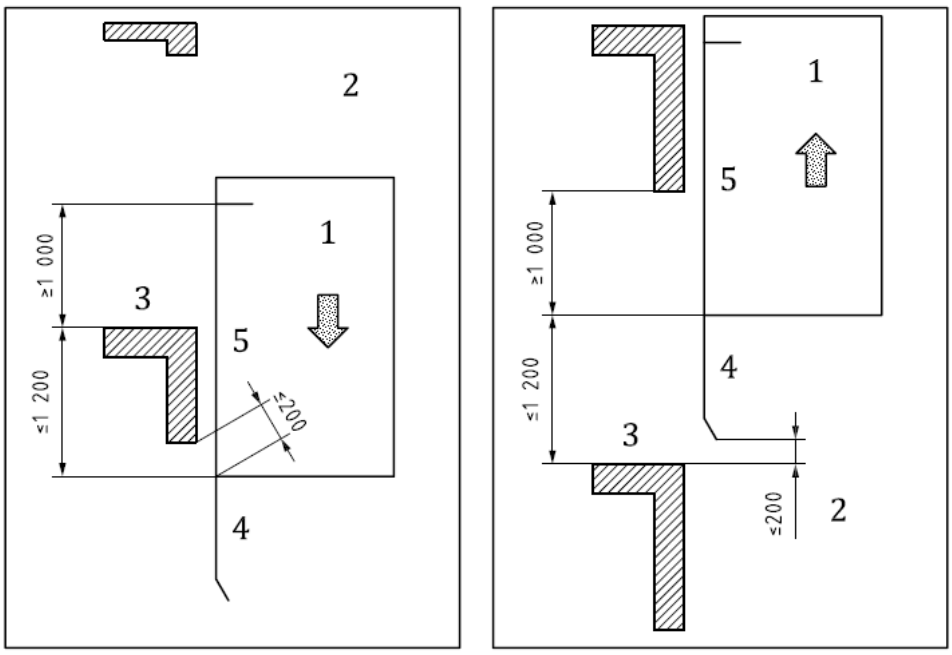

Key

1 car
2 well
3 landing
4 car apron
5 car entrance

Fig. 20 Unintended Car Movement — Downwards and Upwards Movement

Free Standard provided by BIS via BSB Edge Private Limited to Akshay Chaudhary - Chennai(akshay.chdary@gmail.com) 136.238.2.51 [for non-commercial use only].

5.6.7.8 The means shall operate an electric safety device in conformity with **5.11.2** if it is engaged.

NOTE — This can be common to the switching device of **5.6.7.7**.

5.6.7.9 When the means has been activated or the self-monitoring has indicated a failure of the stopping element of the means, its release, or the reset of the lift, shall require the intervention of a competent maintenance person.

5.6.7.10 The release of the means shall not require access to the car or the counterweight or balancing weight.

5.6.7.11 After its release, the means shall be in condition to operate.

5.6.7.12 If the means requires external energy to operate, the absence of energy shall cause the lift to stop and keep it stopped. This does not apply for guided compression springs.

5.6.7.13 The unintended car movement with open doors protection means is regarded as a safety component and shall be verified according to the requirements in **5.8** of IS 17900 (Part 2).

5.6.7.14 A data plate shall be fixed on the unintended movement protection means, either for the complete system or subsystems in accordance with **5.8.1** of IS 17900 (Part 2), indicating:

a) the name of the manufacturer of the unintended movement protection means;
b) the type of unintended movement protection means.

5.7 Guide Rails

5.7.1 *Guiding of the Car, Counterweight or Balancing Weight*

5.7.1.1 The car, counterweight or balancing weight shall each be guided by at least two rigid steel guide rails.

5.7.1.2 The guide rails shall be made of drawn steel, or the rubbing surfaces shall be machined.

5.7.1.3 Guide rails for counterweights or balancing weights without safety gear may be made of formed metal sheet. They shall be protected against corrosion.

5.7.1.4 The fixing of the guide rails to their brackets and to the building shall permit compensation, either automatically or by simple adjustment, of effects due to normal settling of the building or shrinkage of concrete.

A rotation of the attachments by which the guide rails can be released shall be prevented.

5.7.1.5 For guide rail fixings containing non-metallic elements, the failure of these elements shall be taken into account for calculation of permissible deflections.

5.7.2 *Permissible Stresses and Deflections*

5.7.2.1 *General provisions*

5.7.2.1.1 The guide rails, their joints and attachments shall withstand the loads and forces imposed on them in order to ensure a safe operation of the lift.

The aspects of safe operation of the lift concerning guide rails are:

a) guidance of the car, counterweight or balancing weight shall be assured;
b) deflections shall be limited to such an extent that, due to them:
   1) unintended unlocking of the doors shall not occur;
   2) operation of the safety devices shall not be affected;
   3) collision of moving parts with other parts shall not be possible.

5.7.2.1.2 The combination of deflections of guide rails and deflections of brackets, play in the guide shoes and straightness of the guide rails shall be taken into account in order to ensure safe operation of the lift.

5.7.2.2 *Load cases*

The following load cases shall be considered:

a) normal operation — running;
b) normal operation — loading and unloading;
c) safety device operation.

NOTES

1 For each load case, a combination of forces can act on the guide rails (*see* **5.7.2.3.1**).

2 Depending on the fixation of the guide rails (standing or hanging), the worst case is considered relevant for the safety device providing the force to the rail.

5.7.2.3 *Forces on guide rails*

5.7.2.3.1 The following forces on guide rails shall be taken into account for calculation of permissible stresses and deflections of guide rails:

a) horizontal forces from guide shoes due to:
   1) masses of the car and its rated load, compensation means, travelling cables, etc. or the counterweight/balancing weight, taking into consideration their suspension points and dynamic impact factors;
   2) wind loads in case of lifts outside a building with partially enclosed well.
b) vertical forces from:

Free Standard provided by BIS via BSB Edge Private Limited to Akshay Chaudhary - Chennai(akshay.chdary@gmail.com) 136.238.2.51 [for non-commercial use only].

1) braking forces of safety gears and pawl devices fixed on guide rails;
2) auxiliary parts fixed on the guide rail;
3) weight of guide rail,
4) push through forces of rail clips.

c) torques due to auxiliary equipment including dynamic impact factors.

5.7.2.3.2 The acting point, P, of the masses of the empty car and components supported by the car, such as ram, part of travelling cable, compensating ropes/chains (if any) shall be the mass centre of gravity of them.

5.7.2.3.3 The guiding forces of a counterweight, M_{cwt}, or balancing weight, M_{bwt}, shall be evaluated taking into account:

a) the acting point of the mass;
b) the suspension;
c) the forces due to compensating ropes/chains (if any), tensioned or not.

On a counterweight or balancing weight, centrally guided and suspended, an eccentricity of the acting point of the mass from the centre of gravity of the horizontal cross area of the counterweight or balancing weight of at least 5 percent of the width and 10 percent of the depth shall be taken into consideration.

5.7.2.3.4 In load cases "normal use" and "safety device operation", the rated load, Q, of the car shall be evenly distributed over those three quarters of the car area being in the most unfavorable position.

However, if different load distribution conditions are intended after negotiations (**0.4.2**), additional calculations shall be made on the basis of this condition, and the worst case shall be considered.

The braking force of safety devices shall be equally distributed on guide rails.

NOTE — It is assumed that the safety devices operate simultaneously on the guide rails.

5.7.2.3.5 The vertical force, F_v, of the car, counterweight or balancing weight resulting in compression or tension force shall be evaluated accordingly by using **Formulae (8)** to **(12)**:

$$F_v = \frac{k_1 \times g_n (P + Q)}{n} + (M_g \times g_n) + F_p \text{ for the car} \quad \text{... (8)}$$

$$F_v = \frac{k_1 \times g_n \times M_{cwt}}{n} + (M_g \times g_n) + F_p \text{ for the counterweight} \quad \text{... (9)}$$

$$F_v = \frac{k_1 \times g_n \times M_{bwt}}{n} + (M_g \times g_n) + F_p \text{ for the balancing weight} \quad \text{... (10)}$$

$$F_p = n_b \times F_r \text{ in case of guide rails supported on the pit or hanging (fixed at the top of the well)} \quad \text{... (11)}$$

$$F_p = \frac{1}{3} n_b \times F_r \text{ in case of freely hanging guide rails (no fixing point)} \quad \text{... (12)}$$

where

F_p is the push through forces of all brackets at one guide rail (due to normal settling of the building or shrinkage of concrete), in newtons;

F_r is the push through force of all clips per bracket, in newtons;

g_n is the standard acceleration of free fall (9.81 m/s^2);

k_1 is the impact factor according to **Table 14** (k_1 = 0 in the case of no safety device acting on guide rail);

M_g is the mass of one line of guide rails, in kilograms;

n is the number of guide rails;

n_b is the number of brackets for a guide rail;

P are the masses of the empty car and components supported by the car, that is, part of the travel- ling cable, compensating ropes/chains (if any), etc., in kilograms;

Q is the rated load, in kilograms.

NOTE — F_p depends on the way the guide rail is supported, the number of fixations, brackets and clip design. For small travels, the effect of the settling of the building (not made of timber) is small and can be absorbed by the elasticity of the brackets. In this case, the use of non-sliding clips is common practice.

For travel heights not exceeding 40 m the force, F_p, may be ignored in the formula. The design shall allow for adequate clearances above and/or below the guide rails depending on the fixation to allow for the shrinkage of the building.

5.7.2.3.6 While loading or unloading a car, a vertical force on the sill, F_s, is assumed to act centrally on the sill of the car entrance. The amount of the force applied on the sill shall be as **Formulae (13)** to **(15)**:

$$F_S = 0.4 \times g_n \times Q \quad \text{for passenger lifts} \quad \text{... (13)}$$

$$F_S = 0.6 \times g_n \times Q \quad \text{for goods lifts} \quad \text{... (14)}$$

$$F_S = 0.85 \times g_n \times Q \quad \text{for goods lifts in the case of heavy handling devices, if the weight of the device is not included in the rated load} \quad \text{... (15)}$$

NOTE — 0.85 is based on the assumption of 0.6 × Q and half of the weight of the fork lift truck, which — due to experience — is not bigger than half the rated load: 0.6 + 0.5 × 0.5 = 0.85.

Free Standard provided by BIS via BSB Edge Private Limited to Akshay Chaudhary - Chennai(akshay.chdary@gmail.com) 136.238.2.51 [for non-commercial use only].

When applying the force on the sill, the car shall be regarded as empty. For cars with more than one entrance, the force on the sill needs to be applied at the most unfavorable entrance only.

When the car is at the landing and the guide shoes (top and bottom of car) are positioned within 10 percent of the distance between the vertical guide rail brackets, the bending due to sill forces may be ignored.

5.7.2.3.7 Forces and torques per guide rail due to auxiliary equipment fixed to the guide rail, M_{aux}, shall be considered, except for overspeed governors and their associated parts, switches or positioning equipment.

If the machine or suspensions means are fixed to the guide rails, additional load cases according to the **Table 13** shall be considered.

5.7.2.3.8 Windloads, *WL*, shall be considered with lifts outside a building with incomplete well enclosure, and determined by negotiation with the building designer (**0.4.2**).

5.7.3 *Combination of Loads and Forces*

The loads and forces and the load cases to be taken into consideration are shown in **Table 13**.

5.7.4 *Impact Factors*

5.7.4.1 *Safety device operation*

The impact factor due to safety device operation, k_1, (*see* **Table 14**) depends on the type of safety device.

5.7.4.2 *Normal operation*

In the load case "normal operation running", the vertical moving masses of the car, $P + Q$, and counterweight/balancing weight, M_{cwt}/M_{bwt}, shall be multiplied by the impact factor, k_2, (*see* **Table 14**) to take into consideration hard braking due to electric safety device actuation or by an accidental interruption of the power supply.

Table 13 Loads and Forces to be Taken into Consideration in the Different Load Cases

(*Clauses* 5.7.2.3.7 *and* 5.7.3)

Sl No.	Load Cases	Loads and Forces	P	Q	M_{cwt}/M_{bwt}	F_s	F_p	M_g	M_{aux}	WL
(1)	(2)	(3)	(4)	(5)	(6)	(7)	(8)	(9)	(10)	(11)
i)	Normal operation	Running	x	x	x		x[a]	x	x	x
ii)		Loading + unloading	x			x	x[a]	x	x	x
iii)	Safety device operation		x	x	x		x[a]	x	x	

[a] *See* **5.7.2.3.5**.

NOTE — Load and forces may not act simultaneously.

Table 14 Impact Factors

(*Clauses* 5.7.2.3.5, 5.7.4.1, 5.7.4.2, 5.7.4.3 *and* 5.7.4.4)

Sl No.	Impact at	Impact Factor	Value
(1)	(2)	(3)	(4)
i)	Operation of instantaneous safety gear, not of the captive roller type	k_1	5
ii)	Operation of instantaneous safety gear, of the captive roller type or pawl device with energy accumulation type buffer or energy accumulation type buffer		3
iii)	Operation of progressive safety gear or pawl device with energy dissipation type buffer or energy dissipation type buffer		2
iv)	Rupture valve		2
v)	Running	k_2	1.2
vi)	Auxiliary parts fixed to the guide rail and other operational scenarios	k_3	(...)[a]

[a] The value is determined by the manufacturer depending on the actual installation.

Free Standard provided by BIS via BSB Edge Private Limited to Akshay Chaudhary - Chennai(akshay.chdary@gmail.com) 136.238.2.51 [for non-commercial use only].

5.7.4.3 *Auxiliary parts fixed to the guide rail and/or other operational scenarios*

The forces applied to the guide rails of the car, counterweight or balancing weight shall be multiplied with the impact factor, k_3, (*see* **Table 14**) to take into account the possible car, counterweight or balancing weight bounce when the car, counterweight/balancing weight is stopped by a safety device.

5.7.4.4 *Values of impact factors*

The values of the impact factors are given in **Table 14**.

5.7.4.5 *Permissible stresses*

The permissible stresses shall be determined by **Formula (16)**:

$$\sigma_{prem} = \frac{R_m}{S_t} \quad \text{... (16)}$$

where

σ_{perm} is the permissible stress, in newtons per square millimetre;

R_m is the tensile strength, in newtons per square millimetre;

S_t is the safety factor.

The safety factor shall be taken from **Table 15**.

Table 15 Safety Factors for Guide Rails

(*Clause* 5.7.4.5)

Sl No.	Load Cases	Elongation (A_5)	Safety Factor
(1)	(2)	(3)	(4)
i)	Normal operation and loading/ unloading	$A_5 > 12$ percent	2.25
ii)		8 percent $\leq A_5 \leq$ 12 percent	3.75
iii)	Safety device operation	$A_5 > 12$ percent	1.8
iv)		8 percent $\leq A_5 \leq$ 12 percent	3.0

The strength values shall be taken from the manufacturer.

Materials with elongations less than 8 percent are regarded as too brittle and shall not be used.

5.7.4.6 *Permissible deflections*

For T-profile guide rails and their fixings (brackets, separation beams), the maximum calculated permissible deflections, δ_{perm}, are:

a) δ_{perm} = 5 mm in both directions for car, counterweight or balancing weight guide rails on which safety gears are operating;

b) δ_{perm} = 10 mm in both directions for guide rails of counterweight or balancing weight without safety gears.

Any deflection of building structure shall be taken into account in respect of guide rail displacement.

See **0.4.2** negotiations and **E-2**.

5.7.4.7 *Calculation*

Guide rails shall be calculated according to:

a) **5.10** of IS 17900 (Part 2); or

b) IS 800; or

c) Finite Element Method (FEM).

5.8 Buffers

5.8.1 *Car and Counterweight Buffers*

5.8.1.1 Lifts shall be provided with buffers at the bottom limit of travel of the car and counterweight.

In the case of buffer(s) fixed to the car or the counterweight, the impact area(s) of the buffer(s) on the pit floor shall be made obvious by an obstacle(s) (pedestal) of a height not less than 300 mm.

An obstacle is not required for buffer(s) fixed to the counterweight where a screen according to **5.2.5.5.1** is extended to not more than 50 mm above the pit floor.

5.8.1.2 In addition to the requirements of **5.8.1.1**, positive drive lifts shall be provided with buffers on the car top to function at the upper limit of travel.

5.8.1.3 For hydraulic lifts, when the buffer(s) of a pawl device is (are) used to limit the travel of the car at the bottom, the pedestal according to **5.8.1.1** is also required, unless the fixed stops of the pawl device are mounted on the car guide rails, and the car is not able to pass with pawl(s) retracted.

5.8.1.4 For hydraulic lifts, when buffers are fully compressed, the ram shall not hit the base of the cylinder.

This does not apply to devices ensuring re-synchronization of telescopic cylinders, where at least one stage shall not hit its down travel mechanical limit.

5.8.1.5 Energy accumulation type buffers, with linear and non-linear characteristics, shall only be used if the rated speed of the lift does not exceed 1 m/s.

5.8.1.6 Energy dissipation type buffers can be used regardless of the rated speed of the lift.

5.8.1.7 The energy accumulation type buffers with non-linear characteristics and energy dissipation type buffers are regarded as safety components and shall be verified according to the requirements in **5.5** of IS 17900 (Part 2).

Free Standard provided by BIS via BSB Edge Private Limited to Akshay Chaudhary - Chennai(akshay.chdary@gmail.com) 136.238.2.51 [for non-commercial use only].

5.8.1.8 On the buffers other than those with linear characteristics (**5.8.2.1.1**), there shall be a data plate showing the:

a) name of the manufacturer of the buffer;
b) type of the buffer;
c) type and designation of the liquid, in the case of hydraulic buffers.

5.8.2 *Stroke of Car and Counterweight Buffers*

5.8.2.1 *Energy accumulation type buffers*

5.8.2.1.1 *Buffers with linear characteristics*

5.8.2.1.1.1 The total possible stroke of the buffers shall be at least equal to twice the gravity stopping distance corresponding to 115 percent of the rated speed: (0.135 v^2), *see* note below. The stroke is expressed in metres.

However, the stroke shall not be less than 65 mm.

NOTE — $\frac{2\times(1.15v)^2}{2\times g_n} = 0.1348 \times v^2$, rounded to: $0.135 \times v^2$

5.8.2.1.1.2 Buffers shall be designed to cover the stroke defined in **5.8.2.1.1.1** under a static load of between 2.5 times and 4 times the sum of the mass of the car and its rated load (or the mass of the counterweight).

5.8.2.1.2 *Buffers with non-linear characteristics*

5.8.2.1.2.1 Energy accumulation type buffers with non-linear characteristics shall fulfil the following requirements when hitting the buffer(s) with the mass of the car and its rated load or of the counterweight, in case of free fall with a speed of 115 percent of the rated speed:

a) the retardation according to **5.5.3.2.6.1 a)** of IS 17900 (Part 2) shall not be more than 1 g_n;
b) the retardation of more than 2.5 g_n shall not be longer than 0.04 s;
c) the return speed of the car or the counterweight shall not exceed 1 m/s;
d) there shall be no permanent deformation after actuation;
e) the maximum peak retardation shall not exceed 6 g_n.

5.8.2.1.2.2 The term "fully compressed", mentioned in **Table 2** means a compression of 90 percent of the installed buffer height, without considering fixation elements of the buffer, which can limit the compression to a lower value.

5.8.2.2 *Energy dissipation type buffers*

5.8.2.2.1 The total possible stroke of the buffers shall be at least equal to the gravity stopping distance corresponding to 115 percent of the rated speed: 0.067 4 v^2. The stroke is expressed in meters.

5.8.2.2.2 When the slowdown of lift at the ends of its travel is monitored according to **5.12.1.3**, for rated speeds above 2.50 m/s, the speed at which the car (or the counterweight) comes into contact with the buffers may be used instead of 115 percent of the rated speed, when calculating the buffer stroke according to **5.8.2.2.1**. However, the stroke shall not be less than 0.42 m.

5.8.2.2.3 Energy dissipation type buffers shall fulfil the following requirements:

a) hitting the buffer with the mass of the car with its rated load, in case of free fall with a speed of 115 percent of the rated speed or the reduced speed according to **5.8.2.2.2**, the average retardation shall not be more than 1 g_n;
b) retardation of more than 2.5 g_n shall not be longer than 0.04 s;
c) there shall be no permanent deformation after actuation.

5.8.2.2.4 The normal operation of the lift shall depend on the return of the buffers to their normal extended position after operation. The device for checking this shall be an electric safety device in conformity with **5.11.2**.

5.8.2.2.5 Buffers, if hydraulic, shall be constructed so that the fluid level can easily be checked.

5.9 Lift Machinery and Associated Equipment

5.9.1 *General Provisions*

5.9.1.1 Each lift shall have at least one machine of its own.

5.9.1.2 Effective protection shall be provided for accessible rotating parts of machinery, in particular:

a) keys and screws in the shafts;
b) tapes, belts;
c) gears and pulleys;
d) projecting motor shafts.

Exception is made for traction sheaves with protections according to **5.5.7**, hand winding wheels, brake drums and any similar smooth, round parts. Such parts shall be painted yellow, at least in part.

5.9.2 *Lift Machine for Traction Lifts and Positive Drive Lifts*

5.9.2.1 *General provisions*

5.9.2.1.1 The following two methods of drive are permissible by:

a) traction (use of sheaves and ropes/CSBs);

Free Standard provided by BIS via BSB Edge Private Limited to Akshay Chaudhary - Chennai(akshay.chdary@gmail.com) 136.238.2.51 [for non-commercial use only].

b) positive drive, i.e.
   1) use of a drum and ropes.
   2) This sub clause has not been used.

The rated speed shall not exceed 0.63 m/s. Counterweights shall not be used. The use of a balancing weight is permitted.

The calculations of the driving elements shall take into account the possibility of the counterweight or the car resting on its buffers.

5.9.2.1.2 No friction gearing, belt, chain, clutch or chain driven mechanism shall be used for connecting the main driving gear to the traction sheaves.

5.9.2.2 *Braking system*

5.9.2.2.1 *General provisions*

5.9.2.2.1.1 The lift shall be provided with a braking system which operates automatically in the event of loss of:

a) the main power supply;
b) the supply to control circuits.

5.9.2.2.1.2 The braking system shall have an electro-mechanical brake (friction type), but may, in addition, have other braking means (for example, electric).

5.9.2.2.2 *Electro-mechanical brake*

5.9.2.2.2.1 This brake on its own shall be capable of stopping the machine when the car is travelling downward at the rated speed and with the rated load plus 25 percent. In these conditions, the average retardation of the car shall not exceed that resulting from operation of the safety gear or stopping on the buffer.

All the mechanical components of the brake which take part in the application of the braking action on the braking surface shall be installed at least in two sets. If one of the brake sets is not working due to failure of a component, a sufficient braking effort to decelerate, stop and hold the car travelling downwards at the rated speed and with the rated load in the car, and upwards with an empty car, shall continue to be exercised.

Any solenoid plunger is considered to be a mechanical part, any solenoid coil is not.

5.9.2.2.2.2 The component on which the brake operates shall be coupled to the traction sheave or drum by direct and positive mechanical means.

5.9.2.2.2.3 To hold off, the brake shall require a continuous flow of current, except as permitted by **5.9.2.2.2.7**.

The following shall be met:

a) the interruption of this current, initiated by an electric safety device as required in **5.11.2.4**, shall be made by one of the following means:
   1) two independent electromechanical devices according to **5.10.3.1**, whether or not integral with those which cause interruption of the current feeding the lift machine;

      If, while the lift is stationary, one of the electromechanical devices has not opened the brake circuit, any further movement of the car shall be prevented. Stuck-at failure of this monitoring function shall have the same result;
   2) electrical circuit satisfying **5.11.2.3**.

This means is regarded as a safety component and shall be verified according to the requirements in **5.6** of IS 17900 (Part 2).

b) when the motor of the lift is likely to function as a generator, it shall not be possible for the electric device operating the brake to be fed directly by the motor;
c) braking shall become effective without supplementary delay after opening of the brake release circuit;

   NOTE — A passive acting electrical component that reduces sparking (for example, diode, capacitor or varistors) is not considered as a means of delay.
d) operation of an overload and/or over current protective device (if any) for the electro-mechanical brake shall initiate the simultaneous de-energization of the machine;
e) current shall not be applied to the brake until the motor has been powered.

5.9.2.2.2.4 The brake shoe or pad pressure shall be exerted by guided compression springs or weights.

5.9.2.2.2.5 Band brakes shall not be used.

5.9.2.2.2.6 Brake linings shall be incombustible. Asbestos material shall not be used.

5.9.2.2.2.7 The machine shall be capable of having the brake released by a continuous manual operation. The operation can be mechanical (for example, lever) or electrical, powered by an automatically rechargeable emergency supply.

The emergency supply shall be sufficient to move the car to a landing, taking into consideration other equipment connected to this supply and the time taken to respond to emergency situations.

A failure of the release of the manual operation shall not cause a failure of the braking function.

Free Standard provided by BIS via BSB Edge Private Limited to Akshay Chaudhary - Chennai(akshay.chdary@gmail.com) 136.238.2.51 [for non-commercial use only].

It shall be possible to test each brake set independently from outside of the well.

5.9.2.2.2.8 Information for use and corresponding warnings, particularly for reduced stroke buffer, shall be fixed on, or near, means to operate the machine brake manually.

5.9.2.2.2.9 With the brake manually released and the car loaded within the limits of **Formulae (17)** and **(18)**:

$$(q - 0.1) \times Q \quad \text{... (17)}$$

$$(q + 0.1) \times Q \quad \text{... (18)}$$

where

q is the balance factor indicating the amount of counterbalance of the rated load by the counterweight;

Q is the rated load.

It shall be possible to move the car to an adjacent floor by either:

a) natural movement due to gravity; or
b) manual operation consisting of:
   1) mechanical means, present on site; or
   2) electrical means, powered by supply independent from the mains, present on site.

5.9.2.3 *Emergency operation*

5.9.2.3.1 Where a means of emergency operation is required [*see* **5.9.2.2.2.9 b)**], it shall consist of either:

a) a mechanical means, where the manual effort to move the car to a landing does not exceed 150 N, which complies with the following:
   1) if the means for moving the car can be driven by the moving lift, then it shall be a smooth, spokeless wheel;
   2) if the means is removable, it shall be located in an easily accessible place in the machinery space. It shall be suitably marked if there is any risk of confusion as to the machine for which it is intended;
   3) if the means is removable or can be disengaged from the machine, an electric safety device in conformity with **5.11.2** shall be actuated, at the latest when the means is about to be coupled with the machine; or
b) an electrical means which complies with the following:
   1) the power supply shall be able to move the car with any load to an adjacent landing within 1 h after a breakdown;
   2) the speed shall be not greater than 0.30 m/s.

5.9.2.3.2 It shall be possible to check easily whether the car is in an unlocking zone. *See* also **5.2.6.6.2 c)**.

5.9.2.3.3 If the manual effort to move the car in the upwards direction with its rated load is greater than 400 N, or if no mechanical means defined in **5.9.2.3.1 a)** is provided, a means of emergency electrical operation shall be provided in accordance with **5.12.1.6**.

5.9.2.3.4 The means to actuate the emergency operation shall be located:

a) in the machine room (**5.2.6.3**);
b) in the machinery cabinet (**5.2.6.5.1**); or
c) on the emergency and tests panel(s) (**5.2.6.6**).

5.9.2.3.5 If a hand winding wheel is provided for emergency operation, the direction of movement of the car shall be clearly indicated on the machine, close to the hand winding wheel.

If the wheel is not removable, the indication may be on the wheel itself.

5.9.2.4 *Speed*

The speed of the car, half loaded, in upwards and downwards motion, in mid-travel, excluding all acceleration and retardation periods, shall not exceed the rated speed by more than 5 percent, when the supply is at its rated frequency, and the motor voltage is equal to the rated voltage of the equipment.

NOTE — It is good practice that, in the above conditions, the speed is not lower than a value 8 percent below the rated speed.

This tolerance is also applicable for the speed in the case of:

a) levelling [**5.12.1.4 c)**];
b) re-levelling [**5.12.1.4 d)**];
c) inspection operation [**5.12.1.5.2.1 e)** and **5.12.1.5.2.1 f)**];
d) emergency electrical operation [**5.12.1.6.1 f)**].

5.9.2.5 *Removing the power which can cause rotation of the motor*

5.9.2.5.1 *General*

The removal of power which can cause rotation of the motor, initiated by an electric safety device, as required by **5.11.2.4**, shall be controlled as detailed below.

5.9.2.5.2 *Motors supplied directly from a.c. or d.c. mains by contactors*

The supply shall be interrupted by two independent contactors, the contacts of which shall be in series in the supply circuit. If, while the lift is stationary, one of the contactors has not opened the main contacts, further

Free Standard provided by BIS via BSB Edge Private Limited to Akshay Chaudhary - Chennai(akshay.chdary@gmail.com) 136.238.2.51 [for non-commercial use only].

movement of the car shall be prevented at the latest at the next change in the direction of motion.

Stuck-at failure of this monitoring function shall have the same result.

5.9.2.5.3 *Drive using a "Ward-Leonard" system*

5.9.2.5.3.1 *Excitation of the generator supplied by classical elements*

Two independent contactors shall interrupt:

a) the motor generator loop;
b) the excitation of the generator; or
c) one the loop and the other the excitation of the generator.

If, while the lift is stationary, one of the contactors has not opened the main contacts, further movement of the car shall be prevented, at the latest at the next change in direction of motion. Stuck-at failure of this monitoring function shall have the same result.

In cases b) and c), effective precautions shall be taken to prevent the rotation of the motor in the case of a residual field, if any, in the generator (for example, suicide circuit).

5.9.2.5.3.2 *Excitation of the generator supplied and controlled by static elements*

One of the following methods shall be used:

a) the same methods as specified in **5.9.2.5.3.1**;
b) a system consisting of:
   1) a contactor interrupting the excitation of the generator or the motor generator loop.

      The coil of the contactor shall be released at least before each change in direction of motion. If the contactor does not release, any further movement of the lift shall be prevented. Stuck-at failure of this monitoring function shall have the same result;
   2) a control device blocking the flow of energy in the static elements;
   3) a monitoring device to verify the blocking of the flow of energy each time the lift is stationary.

If, during a normal stopping period, the blocking by the static elements is not effective, the monitoring device shall cause the contactor to release and any further movement of the lift shall be prevented.

Effective precautions shall be taken to prevent the rotation of the motor in the case of a residual field, if any, in the generator (for example, suicide circuit).

5.9.2.5.4 *a.c. or d.c. motor supplied and controlled by static elements*

One of the following methods shall be used:

a) two independent contactors interrupting the current to the motor.

   If, while the lift is stationary, one of the contactors has not opened the main contacts, any further movement shall be prevented, at the latest at the next change in direction of motion. Stuck-at failure of this monitoring function shall have the same result;
b) a system consisting of:
   1) a contactor interrupting the current at all poles.

      The coil of the contactor shall be released at least before each change in direction. If the contactor does not release, any further movement of the lift shall be prevented. Stuck-at failure of this monitoring function shall have the same result;
   2) a control device blocking the flow of energy in the static elements;
   3) a monitoring device to verify the blocking of the flow of energy each time the lift is stationary.

   If, during a normal stopping period, the blocking of the flow of energy by the static elements is not effective, the monitoring device shall cause the contactor to release and any further movement of the lift shall be prevented;
c) electrical circuit satisfying **5.11.2.3**.

   This means is regarded as a safety component and shall be verified according to the requirements in **5.6** of IS 17900 (Part 2);
d) an adjustable speed electrical power drive system with a safe torque off (STO) function according to **4.2.3.2** of IS/IEC 61800-5-2 fulfilling SIL3 requirements, with a hardware fault tolerance of at least 1.

5.9.2.6 *Control devices and monitoring devices*

Control devices according to **5.9.2.5.3.2 b) 2)** or **5.9.2.5.4 b) 2)**, and monitoring devices according to **5.9.2.5.3.2 b) 3)** or **5.9.2.5.4 b) 3)** need not be safety circuits according to **5.11.2.3**.

These devices shall only be used provided that the requirements of **5.11.1** are met to achieve comparability to **5.9.2.5.4 a)**.

5.9.2.7 *Motor run time limiter*

5.9.2.7.1 Traction drive lifts shall have a motor run time limiter causing the de-energizing of the machine, and keep it de-energized, if:

Free Standard provided by BIS via BSB Edge Private Limited to Akshay Chaudhary - Chennai(akshay.chdary@gmail.com) 136.238.2.51 [for non-commercial use only].

a) the machine does not rotate when a start is initiated;

b) the car/counterweight is stopped in downwards movement by an obstacle which causes the suspension means to slip on the traction sheave.

5.9.2.7.2 The motor run time limiter shall function in a time which does not exceed the smaller of the following two values:

a) 45 s;

b) time for travelling the full travel in normal operation, plus 10 s, with a minimum of 20 s if the full travel time is less than 10 s.

5.9.2.7.3 The return to normal operation shall only be possible by manual resetting by a competent maintenance person. On restoration of the power after a supply disconnection, maintaining the machine in the stopped position is not necessary.

5.9.2.7.4 The motor run time limiter shall not affect the movement of the car under either the inspection operation or the emergency electrical operation.

5.9.3 *Lift Machine for Hydraulic Lifts*

5.9.3.1 *General provisions*

5.9.3.1.1 The two following methods of drive are permissible:

a) direct acting;

b) indirect acting.

5.9.3.1.2 In the case of multiple jacks, all the jacks shall be hydraulically connected in parallel so that they all are lifting with the same pressure.

The structure of the car, car sling, guide rails and car guide shoes/rollers shall keep the car floor orientation and synchronize the movement of the rams, in any of the applicable loading conditions mentioned in **5.7.2.2**.

In order to equalize pressure within the cylinders, the pipe work from the manifold to each jack should be approximately equal in length and have similar characteristics, such as the number and type of bends in the pipe work.

5.9.3.1.3 The mass of the balancing weight, if any, shall be calculated such that in case of rupture of the suspension gear (car/balancing weight), the pressure in the hydraulic system does not exceed two times the full load pressure.

In the case of several balancing weights, the rupture of only one suspension gear shall be taken into consideration for the calculation.

5.9.3.2 *Jack*

5.9.3.2.1 *Calculations of cylinder and ram* **5.9.3.2.1.1** *Pressure calculations*

The following shall be satisfied:

a) the cylinder and the ram shall be designed such that, under the forces resulting from a pressure equal to 2.3 times the full load pressure, a safety factor of at least 1.7, referred to the proof stress, $R_{P0.2}$, is assured;

b) for the calculation of the elements of telescopic jacks with hydraulic synchronizing means, the full load pressure shall be replaced by the highest pressure which occurs in an element due to the hydraulic synchronizing means. It shall be taken into account that abnormally high pressure conditions can arise during installation, due to incorrect adjustment of the hydraulic synchronizing means;

c) in the thickness calculations, a value shall be added of 1.0 mm for cylinder walls and cylinder bases, and 0.5 mm for walls of hollow rams for single and telescopic jacks. The dimensions and tolerances of the tubes used for the manufacture of the jack shall be according to the applicable standard of the IS 9158.

d) the calculations shall be carried out according to **5.13** of IS 17900 (Part 2).

5.9.3.2.1.2 *Buckling calculations*

Jacks under compressive loads shall fulfil the following requirements:

a) they shall be designed such that, in their fully extended position and under the forces resulting from a pressure equal to 1.4 times full load pressure, a safety factor of at least two against buckling is assured;

b) the calculations shall be carried out according to **5.13** of IS 17900 (Part 2);

c) as a deviation from **5.9.3.2.1.2 b)**, more complex calculation methods may be used provided that at least the same safety factor is assured.

5.9.3.2.1.3 *Tensile stress calculations*

Jacks under tensile loads shall be designed such that, under the forces resulting from a pressure equal to 1.4 times the full load pressure, a safety factor of at least 2, referred to the proof stress, $R_{P0.2}$, is assured.

5.9.3.2.2 *Connection car/ram (cylinder)*

5.9.3.2.2.1 In case of a direct acting lift, the connection between the car and the ram (cylinder) shall be flexible.

Free Standard provided by BIS via BSB Edge Private Limited to Akshay Chaudhary - Chennai(akshay.chdary@gmail.com) 136.238.2.51 [for non-commercial use only].

5.9.3.2.2.2 The connection between the car and the ram (cylinder) shall be constructed to support the weight of the ram (cylinder) and the additional dynamic forces. The connection means shall be secured.

5.9.3.2.2.3 In case of a ram made with more than one section, the connections between the sections shall be constructed to support the weight of the suspended ram sections and the additional dynamic forces.

5.9.3.2.2.4 In the case of indirect acting lifts, the head of the ram (cylinder) shall be guided.

This requirement does not apply for pulling jacks, provided that the pulling arrangement prevents bending forces on the ram.

5.9.3.2.2.5 In the case of indirect acting lifts, no parts of the ram head guiding system shall be incorporated within the vertical projection of the car roof.

5.9.3.2.3 *Limitation of the ram stroke*

5.9.3.2.3.1 Means shall be provided to stop the ram with buffered effect in such a position that the requirements of **5.2.5.7.1** and **5.2.5.7.2** can be satisfied.

5.9.3.2.3.2 This limitation of stroke shall be either:

a) by means of a cushioned stop; or
b) effected by shutting off the hydraulic supply to the jack by means of a mechanical linkage between the jack and a hydraulic valve: breakage or stretch of such a linkage shall not result in the retardation of the car exceeding the value specified in **5.9.3.2.4.2**.

5.9.3.2.4 *Cushioned stop* **5.9.3.2.4.1** This stop shall either:

a) be an integral part of the jack; or
b) consist of one or more devices external to the jack situated outside the car projection, the resultant force of which is exerted on the center line of the jack.

5.9.3.2.4.2 The design of the cushioned stop shall be such that the average retardation of the car does not exceed 1 g_n and that, in case of an indirect acting lift, the retardation does not result in slack rope.

5.9.3.2.4.3 In cases **5.9.3.2.3.2 b)** and **5.9.3.2.4.1 b)**, a stop shall be provided inside the jack to prevent the ram from leaving the cylinder.

In the case of **5.9.3.2.3.2 b)**, this stop shall be positioned such that the requirements of **5.2.5.7.1** and

5.2.5.7.2 are also satisfied.

5.9.3.2.5 *Means of protection*

5.9.3.2.5.1 If a jack extends into the ground, it shall be installed in a protective tube, sealed at its bottom end. If it extends into other spaces, it shall be suitably protected.

5.9.3.2.5.2 Leak and scrape fluid from the cylinder head shall be collected.

5.9.3.2.5.3 The jack shall be provided with an air venting device.

5.9.3.2.6 *Telescopic jacks*

The following requirements apply additionally:

5.9.3.2.6.1 Stops shall be provided between successive sections to prevent the rams from leaving their respective cylinders.

5.9.3.2.6.2 In the case of a jack below the car of a direct acting lift, when the car rests on its fully compressed buffers, the clear distance:

a) between the successive guiding yokes shall be at least 0.30 m;
b) between the highest guiding yoke and the lowest parts of the car, within a horizontal distance of 0.30 m from the vertical projection of the yoke [parts mentioned in **5.2.5.8.2 b)** excluded] shall be at least 0.30 m.

NOTE — *See* also **5.2.5.8.2 d)**.

5.9.3.2.6.3 The length of the bearing of each section of a telescopic jack without external guidance shall be at least 2 times the diameter of the respective ram.

5.9.3.2.6.4 These jacks shall be provided with mechanical or hydraulic synchronizing means.

5.9.3.2.6.5 When jacks with hydraulic synchronizing means are used, an electric device shall be provided to prevent a start for a normal journey when the pressure exceeds the full load pressure by more than 20 percent.

5.9.3.2.6.6 When ropes are used as synchronizing means, the following requirements apply:

a) there shall be at least three independent ropes;
b) the requirements of **5.5.7.1** and **5.5.1.3** apply;
c) the safety factor shall be at least:
   1) 12 for ropes;
   2) This sub clause has not been used.

      The safety factor is the ratio between the minimum breaking load in newtons of one rope and the maximum force in this rope.

      For the calculation of the maximum force, the following shall be taken into consideration:

      i) the force resulting from the full load pressure;
      ii) the number of ropes.

Free Standard provided by BIS via BSB Edge Private Limited to Akshay Chaudhary - Chennai(akshay.chdary@gmail.com) 136.238.2.51 [for non-commercial use only].

A device shall be provided which prevents the speed of the car in downward movement exceeding the rated speed downward, v_d, by more than 0.30 m/s in the event of failure of the synchronizing means.

5.9.3.3 *Piping*

5.9.3.3.1 *General*

5.9.3.3.1.1 Piping and fittings which are subject to pressure (connections, valves, etc.) shall be:

a) appropriate to the hydraulic fluid used;
b) designed and installed in such a way as to avoid any abnormal stress due to fixing, torsion or vibration;
c) protected against damage, in particular of mechanical origin.

5.9.3.3.1.2 Pipes and fittings shall be appropriately fixed and accessible for inspection.

If pipes (either rigid or flexible) pass through walls or floor, they shall be protected by means of ferrules, the dimensions of which allow the dismantling of the pipes for inspection, if necessary.

No coupling shall be sited inside a ferrule.

NOTE — National/State regulations can require identification and fire protection of hydraulic piping routed through the building.

5.9.3.3.2 *Rigid pipes*

5.9.3.3.2.1 Rigid pipes and fittings between cylinder and non-return valve or down direction valve(s) shall be designed such that, under the forces resulting from a pressure equal to 2.3 times the full load pressure, a safety factor of at least 1.7 referred to the proof stress, $R_{P0.2}$, is assured.

The calculations shall be carried out according to **5.13.1.1** of IS 17900 (Part 2).

The dimensions and tolerances of the tubes used for the manufacture of the rigid pipes shall be according to the applicable standard of the IS 9158.

In the thickness calculations, a value shall be added of 1.0 mm for the connection between the cylinder and the rupture valve, if any, and 0.5 mm for the other rigid pipes.

5.9.3.3.2.2 When telescopic jacks with more than 2 stages and hydraulic synchronizing means are used, an additional safety factor of 1.3 shall be taken into account for the calculation of the pipes and fittings between the rupture valve and the non-return valve or the down direction valve(s).

Pipes and fittings, if any, between the cylinder and the rupture valve shall be calculated on the same pressure basis as the cylinder.

5.9.3.3.3 *Flexible hoses*

5.9.3.3.3.1 The flexible hose between cylinder and non-return valve or down direction valve shall be selected with a safety factor of at least 8, relating full load pressure and bursting pressure.

5.9.3.3.3.2 The flexible hose and its couplings between cylinder and non-return valve or down direction valve shall withstand without damage a pressure of five times the full load pressure. This test shall be carried out by the manufacturer of the hose assembly.

5.9.3.3.3.3 The flexible hose shall be marked in an indelible manner with:

a) the name of the manufacturer or the trademark;
b) the test pressure;
c) the date of the test.

5.9.3.3.3.4 The flexible hose shall be fixed with a bending radius not less than that indicated by the hose manufacturer.

5.9.3.4 *Stopping the machine and checking its stopped condition*

5.9.3.4.1 *General*

A stop of the machine initiated by an electric safety device, as required by **5.11.2.4**, shall be controlled as detailed below.

5.9.3.4.2 *Upwards motion*

For upwards motion, either:

a) the supply to the electric motor shall be interrupted by at least two independent contactors, the main contacts of which shall be in series in the motor supply circuit;
b) the supply to the electric motor shall be interrupted by one contactor, and the supply to the bypass valves (in accordance with **5.9.3.5.4.2**) shall be interrupted by at least two independent electromechanical devices connected in series in the supply circuit of these valves;

   In this case, the temperature monitoring device of the motor and/or the oil (**5.9.3.11**, **5.10.4.3**, **5.10.4.4**) needs to act on a switching device other than this contactor in order to stop the machine;
c) the electric motor shall be stopped by an electrical circuit satisfying **5.11.2.3**. This means is regarded as a safety component and shall be verified according to the requirements in **5.6** of IS 17900 (Part 2); or
d) the electric motor shall be stopped by an adjustable speed electrical power drive system with a safe torque off (STO) function according to **4.2.3.2** of IS/IEC 61800-5-2, fulfilling SIL3 requirements with a hardware fault tolerance of at least 1.

Free Standard provided by BIS via BSB Edge Private Limited to Akshay Chaudhary - Chennai(akshay.chdary@gmail.com) 136.238.2.51 [for non-commercial use only].

5.9.3.4.3 *Downwards motion*

For downwards motion, the supply to the down direction valve(s) shall be interrupted by one of the following means:

a) by at least two independent electromechanical devices according to **5.10.3.1**, connected in series;
b) directly by the electric safety device, provided it is suitable rated electrically; or
c) electrical circuit satisfying **5.11.2.3**.

This means is regarded as a safety component and shall be verified according to the requirements in **5.6** of IS 17900 (Part 2).

5.9.3.4.4 *Checking of the stopped condition*

If, while the lift is stationary, one of the contactors [**5.9.3.4.2 a)** or **5.9.3.4.2 b)**] has not opened the main contacts or if one of the electromechanical devices [**5.9.3.4.2 b)** or **5.9.3.4.3 a)**] has not opened, a further start shall be prevented, at the latest at the next change in the direction of motion. A stuck-at of this monitoring function shall have the same result.

5.9.3.5 *Hydraulic control and safety devices*

5.9.3.5.1 *Shut-off valve*

5.9.3.5.1.1 A shut-off valve shall be provided. It shall be installed in the circuit which connects the cylinder(s) to the non-return valve and the down direction valve(s).

5.9.3.5.1.2 It shall be located close to the other valves on the lift machine.

5.9.3.5.2 *Non-return valve*

5.9.3.5.2.1 A non-return valve shall be provided. It shall be installed in the circuit between the pump(s) and the shut-off valve.

5.9.3.5.2.2 The non-return valve shall be capable of holding the car with the rated load at any point when the supply pressure drops below the minimum operating pressure.

5.9.3.5.2.3 The closing of the non-return valve shall be effected by the hydraulic pressure from the jack and by at least one guided compression spring and/or by gravity.

5.9.3.5.3 *Pressure relief valve*

5.9.3.5.3.1 A pressure relief valve shall be provided. It shall be connected to the circuit between the pump(s) and the non-return valve. It shall not be possible to bypass the pressure relief valve with the exclusion of the hand pump(s). The hydraulic fluid shall be returned to the tank.

5.9.3.5.3.2 The pressure relief valve shall be adjusted to limit the pressure to 140 percent of the full load pressure.

5.9.3.5.3.3 If necessary, due to high internal losses (head loss, friction), the pressure relief valve may be set to a greater value but not exceeding 170 percent of the full load pressure. In this case, for the calculations of the hydraulic equipment (including jack), a fictitious full load pressure shall be used, equal to **Formula (19)**:

$$\frac{p_s}{1.4} \quad \text{... (19)}$$

where p_s is the selected pressure setting.

In the buckling calculation, the over pressure factor of 1.4 shall then be replaced by a factor corresponding to the increased setting of the pressure relief valve.

5.9.3.5.4 *Direction valves* **5.9.3.5.4.1** *Down direction valves*

Down direction valves shall be held open electrically. Their closing shall be effected by the hydraulic pressure from the jack and by at least one guided compression spring per valve.

5.9.3.5.4.2 *Up direction valves*

If the stopping of the machine is effected in accordance with **5.9.3.4.2 b)**, only bypass valves shall be used for this. They shall be closed electrically. Their opening shall be effected by the hydraulic pressure from the jack and by at least one guided compression spring per valve.

5.9.3.5.5 *Filters*

Filters or similar devices shall be installed in the circuit between:

a) the tank and the pump(s);
b) the shut-off valve, the non-return valve(s) and the down direction valve(s).

The filter, or similar device, between the shut-off valve, the non-return valve(s) and the down direction valve shall be accessible for inspection and maintenance.

5.9.3.6 *Checking the pressure*

5.9.3.6.1 A pressure gauge shall be provided for indication of system pressure. It shall be connected to the circuit between the non-return valve or the down direction valve(s) and the shut-off valve.

5.9.3.6.2 A gauge shut-off valve shall be provided between the main circuit and the connection for the pressure gauge.

5.9.3.6.3 The connection shall be provided with an internal thread of either M 20 × 1.5 or G 1/2”.

Free Standard provided by BIS via BSB Edge Private Limited to Akshay Chaudhary - Chennai(akshay.chdary@gmail.com) 136.238.2.51 [for non-commercial use only].

5.9.3.7 *Tank*

The tank shall be designed and constructed so that it is easy:

a) to check the level of the hydraulic fluid in the tank;

b) to fill and drain.

The characteristics of the hydraulic fluid shall be indicated on the tank.

5.9.3.8 *Speed*

5.9.3.8.1 The rated speed upwards, v_m, and downwards, v_d, shall not be greater than 1.0 m/s (as scope of the standard limited to hydraulic lifts limited to 1 m/s).

5.9.3.8.2 The speed of the empty car upwards shall not exceed the rated speed upwards by more than 8 percent. The speed of the car with rated load downwards shall not exceed the rated speed downwards by more than 8 percent. In each case, this relates to the normal operating temperature of the hydraulic fluid.

For a journey in the upward direction, it is assumed that the supply is at its rated frequency and that the motor voltage is equal to the rated voltage of the equipment.

5.9.3.9 *Emergency operation*

5.9.3.9.1 *Moving the car downwards*

5.9.3.9.1.1 The lift shall be provided with a manually operated emergency lowering valve allowing the car to be lowered to a level where the passengers can leave the car, even in the case of a power failure. It shall be located in the relevant machinery space:

a) machine room (**5.2.6.3**);

b) machinery cabinet (**5.2.6.5.1**);

c) on the emergency and tests panel(s) (**5.2.6.6**).

5.9.3.9.1.2 The speed of the car shall not exceed 0.30 m/s.

5.9.3.9.1.3 The operation of this valve shall require a continual manual force.

5.9.3.9.1.4 This valve shall be protected against involuntary action.

5.9.3.9.1.5 The emergency lowering valve shall not cause further sinking of the ram when the pressure falls below a value predetermined by the manufacturer.

In the case of indirect acting lifts where slack rope can occur, manual operation of the valve shall not cause the sinking of the ram beyond that causing the slack rope.

5.9.3.9.1.6 There shall be a plate near the manually operated valve for emergency downward movement, stating: "**Caution — Emergency lowering**".

5.9.3.9.2 *Moving the car upwards*

5.9.3.9.2.1 A hand pump which causes the car to move in the upwards direction shall be permanently available for every hydraulic lift.

The hand pump shall be stored in the building where the lift is installed and shall be accessible only to authorized persons. Provisions for the connection of the pump shall be available at every lift machine.

Where not permanently installed, clear indications on where the hand pump is located and how to properly connect it shall be available to maintenance and rescue operators.

5.9.3.9.2.2 The hand pump shall be connected to the circuit between the non-return valve or down direction valve(s) and the shut-off valve.

5.9.3.9.2.3 The hand pump shall be equipped with a pressure relief valve limiting the pressure to 2.3 times the full load pressure.

5.9.3.9.2.4 There shall be a plate near the hand pump for emergency upward movement, stating:

"Caution — Emergency lifting"

5.9.3.9.3 *Checking of the car position*

If the lift serves more than two levels, it shall be possible to check whether the car is in an unlocking zone by a means independent of the power supply, from the relevant machinery space:

a) the machine room (**5.2.6.3**);

b) the machinery cabinet (**5.2.6.5.1**); or

c) the emergency and test panel(s) (**5.2.6.6**) where the devices for emergency operations are fitted (**5.9.3.9.1** and **5.9.3.9.2**).

This requirement is not applicable to lifts which are fitted with a mechanical anti-creep device.

5.9.3.10 *Motor run time limiter*

5.9.3.10.1 Hydraulic lifts shall have a motor run time limiter causing the de-energizing of the motor and keeping it de-energized if the motor does not rotate when a start is initiated, or the car does not move.

5.9.3.10.2 The motor run time limiter shall function in a time which does not exceed the smaller of the following two values:

a) 45 s;

b) the time for travelling the full travel in normal operation with rated load, plus 10 s, with a minimum of 20 s if the full travel time is less than 10 s.

Free Standard provided by BIS via BSB Edge Private Limited to Akshay Chaudhary - Chennai(akshay.chdary@gmail.com) 136.238.2.51 [for non-commercial use only].

5.9.3.10.3 The return-to-normal operation shall only be possible by manual resetting. On restoration of the power after a supply disconnection, maintaining the machine in the stopped position is not necessary.

5.9.3.10.4 The motor run time limiter, even if tripped, shall not prevent the inspection operation (**5.12.1.5**) and the electrical anti-creep system (**5.12.1.10**).

5.9.3.11 *Protection against overheating of the hydraulic fluid*

A temperature detecting device shall be provided. This device shall stop the machine and keep it stopped in accordance with **5.10.4.4**.

5.10 Electric Installations and Appliances

5.10.1 *General Provisions*

5.10.1.1 *Limits of application*

5.10.1.1.1 The requirements of this document relating to the installation and the constituent components of the electrical equipment apply to the:

a) main switch of the power circuit and dependent circuits;
b) switch for the car lighting circuit and dependent circuits;
c) well lighting and dependent circuits.

The lift shall be considered as a whole, in the same way as a machine, with its built-in electrical equipment.

NOTE — The requirements as per existing Indian Standards relating to electricity supply circuits apply as far as the input terminals of the switches. They apply to the whole lighting and socket outlet circuits of the machine room and the pulley room.

5.10.1.1.2 The electrical equipment of the lift shall comply with the requirements of IS 16504 (Part 1), as referenced in **5**.

When no precise information is given, the electrical components and devices shall be:

a) suitable for their intended use;
b) in conformity with relevant IS/IEC standards;
c) applied in accordance with the supplier's instructions.

5.10.1.1.3 The electromagnetic compatibility shall comply with the requirements of IS 17805 (Part 1) and IS 17805 (Part 2).

Control equipment according to **5.9.2.2.2.3 a) 2)**, **5.9.2.5.4 c)**, **5.9.2.5.4 d)**, **5.9.3.4.2 c)**, **5.9.3.4.2 d)** and **5.9.3.4.3 c)** shall comply with the safety circuit immunity requirements of IS 17805 (Part 2).

5.10.1.1.4 Electrical actuators shall be selected, mounted, and identified in accordance with IS 16503 (Part 3).

5.10.1.1.5 All control gear [*see* **3.1.13** of IS 16504 (Part 1)] shall be mounted so as to facilitate its operation and maintenance from the front. Where access is required for regular maintenance or adjustment, the relevant devices shall be located between 0.40 m and 2.0 m above the working area. It is recommended that terminals be at least 0.20 m above the working area and be placed so that conductors and cables can easily be connected to them. These requirements are not applicable to control gear on the car roof.

5.10.1.1.6 Heat-emitting components (for example, heat sinks, power resistors) shall be located so that the temperature of each component in the vicinity remains within the permitted limit.

Under normal operation, the temperature of directly accessible equipment shall not exceed the limits given in Table 2 of IS 732.

5.10.1.2 *Protection against electric shock*

5.10.1.2.1 *General*

The protective measures shall comply with the provisions defined by IS 732.

Enclosures that do not otherwise clearly show that they contain electrical equipment that can give rise to a risk of electric shock, shall be marked with graphical symbol 5036 of IEC 60417, Dangerous voltage:

The warning sign shall be plainly visible on the enclosure door or cover.

5.10.1.2.2 *Basic protection (protection against direct contact)*

In addition to the requirements of **5.10.1.2.1**, the following applies:

a) in the lift well, machinery spaces and pulley rooms, protection of the electrical equipment against direct contact shall be provided by means of casings providing a degree of protection of at least IP2X;
b) when equipment is accessible to non-authorized persons, a minimum degree of protection against direct contact corresponding to IP2XD (IS/IEC 60529) shall be applied;

Free Standard provided by BIS via BSB Edge Private Limited to Akshay Chaudhary - Chennai(akshay.chdary@gmail.com) 136.238.2.51 [for non-commercial use only].

c) when enclosures containing hazardous live parts are opened for rescue operations, access to hazardous voltage shall be prevented by minimum degree of protection of IPXXB (IS/IEC 60529);

d) for other enclosures containing hazardous live parts, IS/IEC 61439-1 applies.

5.10.1.2.3 *Additional protection*

Additional protection by means of a residual current protective device (RCD) with a rated residual operating current not exceeding 30 mA shall be provided for:

a) socket outlets depending on the circuit(s) according to **5.10.1.1.1 b)** and **5.10.1.1.1 c)**;

b) control circuits for landing controls and indicators and the safety chain with voltage higher than 50 V AC;

c) circuits on the lift car with voltage higher than 50 V AC.

5.10.1.2.4 *Protection against residual voltages*

The provisions of **6.2.4** of IS 16504 (Part 1) apply.

5.10.1.3 *Insulation resistance of the electrical installation (IS 732)*

5.10.1.3.1 The insulation resistance shall be measured between all live conductor and earth except for PELV and SELV circuits rated 100 VA or less.

Minimum values of insulation resistance shall be taken from **Table 16**.

Table 16 Insulation Resistance

(*Clause* 5.10.1.3.1)

Sl No.	Nominal Circuit Voltage	Test Voltage (d.c.)	Insulation Resistance
	V	V	MΩ
(1)	(2)	(3)	(4)
i)	SELV[a] and PELV[b] > 100 VA	250	≥ 0.5
ii)	≤ 500 including FELV[c]	500	≥ 1.0
iii)	> 500	1 000	≥ 1.0

[a] SELV: safety extra-low voltage.

[b] PELV: protective extra-low voltage.

[c] FELV: functional extra-low voltage.

5.10.1.3.2 The mean value (in direct current) or the r.m.s. value (in alternating current) of the voltage between conductors, or between conductors and earth, shall not exceed 250 V for control and safety circuits.

5.10.2 *Incoming Supply Conductor Terminations*

The provisions of **5.1** and **5.2** of IS 16504 (Part 1) apply.

5.10.3 *Contactors, Contactor Relays, Components of Safety Circuits*

5.10.3.1 *Contactors and contactor relays*

5.10.3.1.1 The main contactors, i.e. those necessary to stop the machine as per **5.9.2.5** and **5.9.3.4**, shall comply with IS/IEC 60947-4-1 and shall be selected according the appropriate utilization category.

The main contactors with their associated short-circuit protective devices shall have type "1" coordination in accordance with **8.2.5.1** of IS/IEC 60947-4-1.

Main contactors directly controlling motors shall, in addition, allow 10 percent of starting operations to be made as inching/jogging, i.e. 90 percent AC-3 + 10 percent AC-4.

These contactors shall have mirror contact(s) according to Annex F of IS/IEC 60947-4-1, in order to ensure the functionality according to **5.9.2.5.2**, **5.9.2.5.3.1**, **5.9.2.5.3.2 b) 1)**, **5.9.2.5.4 a)** and **b) 1)**, **5.9.3.4.2 a)** and **b)** and **5.9.3.4.3 a)**, i.e. detect the non-opening of a main contact.

5.10.3.1.2 If contactor relays are used to operate the main contactors, those contactor relays shall comply with IS/IEC 60947-5-1.

If relays are used to operate the main contactors, those relays shall comply with IS 17064 (Part 1). They shall be selected according to the following utilisation categories:

a) AC-15 for controlling A.C. contactors;

b) DC-13 for controlling D.C. contactors.

5.10.3.1.3 For the main contactors referred to in **5.10.3.1.1**, the contactor relays and relays referred to in **5.10.3.1.2** and the electrical devices interrupting the current to the brake according **5.9.2.2.2.3**, it is necessary for the measures taken to comply with **5.11.1.2 f), g), h), j)**, that:

a) auxiliary contacts of main contactors are mechanically linked contact elements according to Annex L of IS/IEC 60947-5-1;

b) contactor relays comply with Annex L of IS/IEC 60947-5-1;

c) relays comply with IS 17064 (Part 3), in order to ensure that any make contact(s) and any break contact(s) cannot be in closed position simultaneously.

5.10.3.2 *Components of safety circuits*

5.10.3.2.1 When contactor relays or relays as per **5.10.3.1.2** are used, the requirements of **5.10.3.1.3** apply.

Free Standard provided by BIS via BSB Edge Private Limited to Akshay Chaudhary - Chennai(akshay.chdary@gmail.com) 136.238.2.51 [for non-commercial use only].

5.10.3.2.2 Devices used in safety circuits or connected after electric safety devices with regard to creepage distances and clearances with respect to the nominal voltage of the circuit where they are used (*see* IS 15382 (Part 1)), shall meet the requirements of:

a) pollution degree 3;

b) overvoltage category III.

If the protection of the device is IP5X (IS/IEC 60529) or better, pollution degree 2 may be used.

For the electrical separation of other circuits, IS 15382 (Part 1) applies in the same way as above with respect to the r.m.s. working voltage between adjacent circuits.

For printed circuit boards, requirements as mentioned in **5.15** and Table 3 (3.6) of IS 17900 (Part 2) are applicable.

5.10.4 *Protection of Electrical Equipment*

5.10.4.1 For the protection of electrical equipment, **7.1** to **7.4** of IS 16504 (Part 1) applies.

5.10.4.2 Protection of motors against overheating shall be provided for each motor.

NOTE — According to **7.3.1** of IS 16504 (Part 1), motors below 0.5 kW does not need to be provided with overheat protection. This exception, however, does not apply in this document.

5.10.4.3 If the design temperature of electrical equipment provided with temperature monitoring devices is exceeded, then the car shall stop at a landing so that the passengers can leave the car. An automatic return-to-normal operation of the lift shall only occur after sufficient cooling down.

5.10.4.4 If the design temperature of the hydraulic machine motor and/or oil provided with a temperature monitoring device is exceeded, then the car shall stop directly and return to the bottom landing so that the passengers can leave the car. An automatic return-to-normal operation of the lift shall only occur after sufficient cooling down.

5.10.5 *Main Switches*

5.10.5.1 For each lift, a main switch capable of breaking the supply to the lift on all the live conductors shall be provided. This switch shall comply with the requirements of **5.3.2 a)** to **d)** and **5.3.3** of IS 16504 (Part 1).

5.10.5.1.1 This switch shall not cut the circuits feeding:

a) the car's lighting and ventilation;

b) the socket outlet on the car roof;

c) the lighting of machinery spaces and pulley rooms;

d) the socket outlet in the machinery spaces, pulley rooms and in the pit;

e) the lighting of the well.

5.10.5.1.2 This switch shall be located:

a) in the machine room, where it exists;

b) where no machine room exists, in the control cabinet, except if this cabinet is mounted in the well, or

c) at the emergency and tests panel(s) (**5.2.6.6**) when the control cabinet is mounted in the well. If the emergency panel is separate from the test panel, the switch shall be at the emergency panel.

If the main switch is not directly accessible from the control cabinet(s), the drive control system or the lift machine, device(s) according to **5.5** of IS 16504 (Part 1) shall be provided at these locations.

5.10.5.2 The control mechanism for the main switch shall be directly accessible from the entrance(s) to the machine room. If the machine room is common to several lifts, the control mechanism of the main switches shall allow the lift concerned to be identified easily.

If the machinery space has several points of access, or if the same lift has several machinery spaces each with its own point(s) of access, a contactor may be used, which shall be controlled by:

a) a safety contact, in conformity with **5.11.2**; or

b) a device according to **5.5** and **5.6** of IS 16504 (Part 1), inserted in the supply circuit to the coil of the contactor.

The contactor shall have a breaking capacity sufficient to interrupt the current of the largest motor when stalled together with the sum of the normal running currents of all other motors and/or loads.

The re-engagement of the contactor shall not be carried out or made possible except by means of the device which caused its release. The contactor shall be used in conjunction with a manually controlled isolating switch according to **5.5** and **5.6** of IS 16504 (Part 1).

5.10.5.3 Each incoming source of supply to the lift shall have a supply disconnecting device according to **5.3** of IS 16504 (Part 1) located close to the main switch.

In the case of a group of lifts, if, after the opening of the main switch for one lift, parts of the operating circuits remain live, these circuits shall be capable of being separately isolated without breaking the supply to all the lifts in the group. This requirement does not apply to PELV and SELV circuits.

Free Standard provided by BIS via BSB Edge Private Limited to Akshay Chaudhary - Chennai(akshay.chdary@gmail.com) 136.238.2.51 [for non-commercial use only].

5.10.5.4 Any capacitors to correct the power factor shall be connected before the main switch of the power circuit.

If there is a risk of over-voltage, when, for example, the motors are connected by very long cables, the switch of the power circuit shall also interrupt the connection to the capacitors.

5.10.5.5 While the main switch has disconnected the supply to the lift, any automatic operated movement of the lift (for example, automatic battery powered operation) shall be prevented.

5.10.6 *Electric Wiring*

5.10.6.1 *Conductors and cables*

Conductors and cables shall be selected according to **12.1**, **12.2**, **12.3** and **12.4** of IS 16504 (Part 1).

Travelling cables shall be in conformity with IS 4289 (Part 2) or IEC 60245-5, excluding insulation material type requirements.

5.10.6.2 *Cross-sectional area of conductors*

To ensure adequate mechanical strength, the cross-sectional area of conductors shall not be less than as shown in Table 5 of IS 16504 (Part 1).

5.10.6.3 *Wiring practices*

5.10.6.3.1 *General*

The general requirements of **13.1.1**, **13.1.2** and **13.1.3** of IS 16504 (Part 1) apply.

5.10.6.3.2 Conductors and cables shall be installed in conduits or trunkings or equivalent mechanical protection.

Double insulated conductors and cables can be installed without conduits or trunkings if they are located as to avoid accidental damage, for example, by moving parts.

5.10.6.3.3 The requirement of **5.10.6.3.2** need not apply to:

a) conductors or cables not connected to electric safety devices, provided that:
   1) they are not subject to a rated output of more than 100 VA;
   2) they are part of SELV or PELV circuits.
b) the wiring of operating or distribution devices in cabinets or on panels between, either:
   1) different pieces of electric equipment, or
   2) these pieces of equipment and the connection terminals.

5.10.6.3.4 If connections, connection terminals and connectors are not located in protective enclosure, their IP2X (IS/IEC 60529) protection shall be maintained when connected and disconnected, and they shall be properly fixed to prevent unintended disconnection.

5.10.6.3.5 If, after opening of the main switch or switches of a lift, some connection terminals remain live, and if the voltage exceeds 25 VAC or 60 VDC, a permanent warning label according to **6** of IS 16504 (Part 1), shall be appropriately placed in proximity to the main switch or switches, and a corresponding statement shall be included in the maintenance manual.

Furthermore, for circuits connected to such live terminals, the requirements of labelling, separation or identification by colour shall be fulfilled as given in **5.3.5** of IS 16504 (Part 1).

5.10.6.3.6 Connection terminals whose accidental interconnection could lead to a dangerous malfunction of the lift shall be clearly separated, unless their method of construction obviates this risk.

5.10.6.3.7 In order to ensure continuity of mechanical protection, the protective sheathing of conductors and cables shall fully enter the casings of switches and appliances, or shall terminate in a suitably constructed gland.

However, if there is a risk of mechanical damage due to movement of parts or sharp edges of the frame itself, the conductors connected to the electric safety device shall be protected mechanically.

NOTE — Enclosed frames of landing and car doors are regarded as appliance casings.

5.10.6.4 *Connectors*

Plug socket combinations shall comply with the requirements of **13.4.5**, except d) of IS 16504 (Part 1).

Connectors and devices of the plug-in type placed in the circuits of electric safety devices shall be designed so that it shall not be possible to insert them in a position which leads to a dangerous situation.

5.10.7 *Lighting and Socket Outlets*

5.10.7.1 The electric lighting supplies to the car, well, machinery spaces and pulley rooms, and emergency and test panel(s) (**5.2.6.6**), shall be independent of the supply to the machine, either through another circuit, or through connection to the machine supply circuit on the supply side of the main switch (or switches) laid down in **5.10.5**.

5.10.7.2 The supply to socket outlets required on the car roof, in the machinery spaces, in pulley rooms and in the pit, shall be taken from the circuits referred to in **5.10.7.1**.

Free Standard provided by BIS via BSB Edge Private Limited to Akshay Chaudhary - Chennai(akshay.chdary@gmail.com) 136.238.2.51 [for non-commercial use only].

These socket outlets shall be of type 2 P + PE in accordance with IS 1293, supplied directly.

The use of the above socket outlets does not imply that the supply cable has a cross-sectional area corresponding to the rated current of the socket outlet. The cross-sectional area of the conductors may be smaller, provided that the conductors are correctly protected against excess currents.

5.10.8 *Control of the Supply for Lighting and Socket Outlets*

5.10.8.1 A switch shall control the supply to the circuit for lighting and socket outlets of the car. If the machine room contains several lift machines, it is necessary to have one switch per car. This switch shall be located close to the corresponding main power switch.

5.10.8.2 In the machinery spaces, other than those in the well, a switch controlling the supply for lighting shall be located near its access(es). *See* also **5.2.1.4.2**.

Well lighting switches (or equivalent) shall be located both in the pit and close to the main switch, so that the well light can be operated from either location.

In case additional lamps are installed on the car roof, they shall be connected to the car light circuit and switched from the car roof. The switch(es) shall be in an easily accessible position, not more than 1 m from the entry point(s), for inspection or maintenance personnel.

5.10.8.3 Each circuit controlled by the switches laid down in **5.10.8.1** and **5.10.8.2** shall have its own over current protection devices.

5.10.9 *Protective Earthing*

The requirements of **4.2.11.3.1.1** of IS 732 apply.

5.10.10 *Electrical Identification*

All control devices, and electrical components shall be plainly identified with the same reference designation as shown in the electrical diagrams.

The necessary fuse specifications, such as value and type, shall be marked on the fuse or on/near the fuse holders.

In the case of the use of multiple wire connectors, only the connector, and not the wires, needs to be marked.

5.11 Protection Against Electric Faults; Failure Analysis; Electric Safety Devices

5.11.1 *Protection Against Electric Faults; Failure Analysis*

5.11.1.1 *General*

If any single fault listed in **5.11.1.2** in the electric equipment of a lift cannot be excluded under conditions described in **5.11.1.3** and/or **5.15** of IS 17900 (Part 2), it shall not, on its own, be the cause of a dangerous malfunction of the lift.

For safety circuits, *see* **5.11.2.3**.

5.11.1.2 Faults envisaged:

a) absence of voltage;
b) voltage drop;
c) loss of continuity of a conductor;
d) insulation fault in relation to the metalwork or the earth;
e) short circuit or open circuit, change of value or function in an electrical component, for example, resistor, capacitor, transistor, lamp, etc.;
f) non-attraction or incomplete attraction of the moving armature of a contactor or relay;
g) non-separation of the moving armature of a contactor or relay;
h) non-opening of a contact;
j) non-closing of a contact;
k) phase reversal.

5.11.1.3 The non-opening of a contact need not be considered in the case of safety contacts conforming to the requirements of **5.11.2.2**.

5.11.1.4 An earth fault in a circuit in which there is an electric safety device, or in a circuit controlling the brake according to **5.9.2.2.2.3**, or in a circuit controlling the down valve according to **5.9.3.4.3**, shall:

a) either cause the immediate stopping of the machine; or
b) prevent restarting of the machine after the first normal stop, if the first earth fault alone is not dangerous.

Return to service shall only be possible by manual resetting.

5.11.2 *Electric Safety Devices*

5.11.2.1 *General provisions*

5.11.2.1.1 During the operation of one of the electric safety devices, as listed in **Annex A**, the movement of the machine shall be prevented, or it shall be caused to stop immediately, as indicated in **5.11.2.4**.

The electric safety devices shall consist of:

a) either one or more safety contacts satisfying **5.11.2.2**; or

Free Standard provided by BIS via BSB Edge Private Limited to Akshay Chaudhary - Chennai(akshay.chdary@gmail.com) 136.238.2.51 [for non-commercial use only].

b) safety circuits satisfying **5.11.2.3**, consisting of one, or a combination, of the following:
   1) either one or more safety contacts satisfying **5.11.2.2**;
   2) contacts not satisfying the requirements of **5.11.2.2**;
   3) components in accordance with **5.15** of IS 17900 (Part 2);
   4) programmable electronic systems in safety related applications in accordance with **5.11.2.6**.

5.11.2.1.2 Apart from exceptions permitted in this standard (*see* **5.12.1.4**, **5.12.1.5**, **5.12.1.6** and **5.12.1.8**), no electric equipment shall be connected in parallel with an electric safety device.

Connections to different points of the electric safety chain are only permitted for gathering information. The devices used for that purpose shall fulfil the requirements for safety circuits according to **5.11.2.3.2** and **5.11.2.3.3**.

5.11.2.1.3 The effects of internal or external induction or capacity shall not cause failure of electric safety devices in accordance with IS 17805 (Part 2).

5.11.2.1.4 An output signal emanating from an electric safety device shall not be altered by an extraneous signal emanating from another electric device placed further down the same circuit, which would result in a dangerous condition.

5.11.2.1.5 In safety circuits comprising two or more parallel channels, all information other than that required for parity checks shall be taken from one channel only.

5.11.2.1.6 Circuits which record, or delay, signals shall not, even in event of fault, prevent or appreciably delay the stopping of the machine through the functioning of an electric safety device, i.e. the stopping shall occur in the shortest time compatible with the system.

5.11.2.1.7 The construction and arrangement of the internal power supply units shall be, such as to prevent the appearance of false signals at outputs of electric safety devices due to the effects of switching.

5.11.2.2 *Safety contacts*

5.11.2.2.1 *General*

Safety contacts shall comply with the requirements of Annex K of IS/IEC 60947-5-1, with a minimum protection degree of IP4X (IS/IEC 60529) and a mechanical durability suitable for its purpose (at least 106 operating cycles). Alternatively, they shall fulfil the following requirements.

5.11.2.2.2 The operation of a safety contact shall be by positive separation of the circuit-breaking devices. This separation shall occur even if the contacts have welded together.

The design of a safety contact shall be such as to minimize the risk of a short-circuit resulting from component failure.

NOTE — Positive opening is achieved when all the contact-breaking elements are brought to their open position and when, for a significant part of the travel, there are no resilient members (for example, springs) between the moving contacts and the part of the actuator to which the actuating force is applied.

5.11.2.2.3 The safety contacts shall be provided for a rated insulation voltage of 250 V if the enclosure provides a degree of protection of at least IP4X (IS/IEC 60529), or 500 V if the degree of protection of the enclosure is less than IP4X (IS/IEC 60529).

The safety contacts shall belong to the following categories as defined in IS/IEC 60947-5-1:

a) AC-15 for safety contacts in a.c. circuits;
b) DC-13 for safety contacts in d.c. circuits.

5.11.2.2.4 If the degree of protection is equal or less than IP4X (IS/IEC 60529), the clearances shall be at least 3 mm, the creepage distances at least 4 mm and the distances for breaking contacts at least 4 mm after separation. If the protection is better than IP4X (IS/IEC 60529), the creepage distance may be reduced to 3 mm.

5.11.2.2.5 In the case of multiple breaks, the distance after separation between the contacts shall be at least 2 mm.

5.11.2.2.6 Abrasion of conductive material shall not lead to short-circuiting of contacts.

5.11.2.3 *Safety circuits*

5.11.2.3.1 *General*

Fault analysis of safety circuits shall take into account failures in the whole safety circuit, including sensors, signal transmission paths, power supplies, safety logic and safety output.

5.11.2.3.2 Safety circuits shall comply with the requirements of **5.11.1** regarding the appearance of a fault.

5.11.2.3.3 Furthermore, as illustrated by **Fig. 21**, the following requirements shall apply:

a) if one fault combined with a second fault can lead to a dangerous situation, the lift shall be stopped at the latest at the next operating sequence in which the first faulty element should participate.

Free Standard provided by BIS via BSB Edge Private Limited to Akshay Chaudhary - Chennai(akshay.chdary@gmail.com) 136.238.2.51 [for non-commercial use only].

All further operation of the lift shall be impossible as long as this fault persists.

The possibility of the second fault occurring after the first, and before the lift has been stopped by the sequence mentioned above, is not considered;

b) if two faults, which by themselves do not lead to a dangerous situation, can lead to a dangerous situation when combined with a third fault, the lift shall be stopped at the latest at the next operating sequence in which one of the faulty elements should participate.

The possibility of the third fault leading to a dangerous situation before the lift has been stopped by the sequence mentioned above is not considered;

c) if a combination of more than three faults is possible, then the safety circuit shall be designed with multiple channels and a monitoring circuit checking the equal status of the channels.

If a different status is detected, the lift shall be stopped.

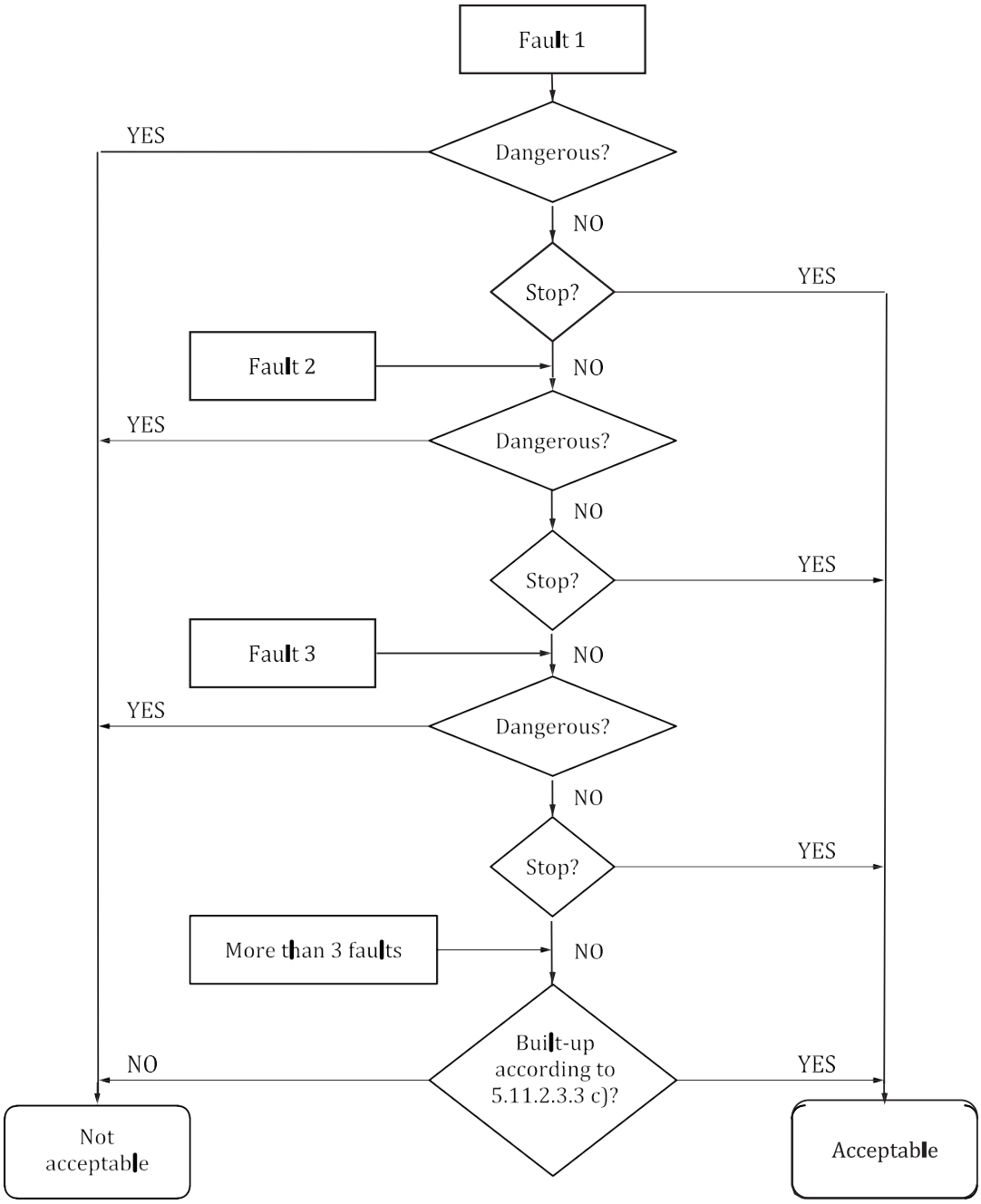

Fig. 21 Diagram for Assessing Safety Circuits

Free Standard provided by BIS via BSB Edge Private Limited to Akshay Chaudhary - Chennai(akshay.chdary@gmail.com) 136.238.2.51 [for non-commercial use only].

In case of two channels, the function of the monitoring circuit shall be checked at the latest prior to a re-start of the lift and, in case of failure, re-starting shall not be possible;

d) on restoration of the power supply after it has been disconnected, maintenance of the lift in the stopped position is not necessary, provided that during the next sequence stopping is re-imposed in the cases covered by **5.11.2.3.3 a)**, **b)** and **c)**;

e) in redundancy-type circuits, measures shall be taken to limit as far as possible the risk of defects occurring simultaneously in more than one circuit, arising from a single cause.

5.11.2.3.4 Safety circuits containing electronic components are regarded as safety components and shall be verified according to the requirements in **5.6** of IS 17900 (Part 2).

5.11.2.3.5 A data plate shall be fixed on safety circuits containing electronic components, indicating:

a) the name of the manufacturer of the safety component;

b) the type of electric safety device.

5.11.2.4 *Operation of electric safety devices*

An electric safety device, when operated, shall immediately initiate the stopping of the machine and prevent it from setting into motion.

The electric safety devices shall act directly on the equipment controlling the supply to the machine, in accordance with the requirements of **5.9.2.2.2.3 a)**, **5.9.2.5** and **5.9.3.4**.

If relays or contactor relays according to **5.10.3.1.3** are used to control the equipment controlling the supply to the machine, the monitoring of these relays or contactor relays shall be done as defined in **5.9.2.2.2.3 a)**, **5.9.2.5** and **5.9.3.4.4**.

5.11.2.5 *Actuation of electric safety devices*

The components actuating the electric safety devices shall be built so that they are able to function properly under the mechanical stresses resulting from continuous normal operation. Mechanical failures which can impact the safety function shall be considered.

Examples of such failures are:

a) slip on traction or friction, on a system used for car speed or position sensing;

b) breakage or slack in tape, chain, rope or similar, on a system used for car speed or position sensing;

c) smoke, dirt or similar, on a system used for car speed or position sensing.

If the devices for actuating electric safety devices are, through the nature of their installation, accessible to persons, they shall be built so that these electric safety devices cannot be rendered inoperative by simple means.

NOTE — A magnet or a bridge piece is not considered a simple means.

In the case of redundancy-type safety circuits, it shall be ensured by mechanical or geometric arrangements of the transmitter elements that a mechanical fault shall not cause loss of redundancy.

For transmitter elements of safety circuits, the requirements of **5.6.3.1.1** of IS 17900 (Part 2) apply.

5.11.2.6 *Programmable electronic systems in safety related applications (PESSRAL)*

Table A-1 gives the minimum safety integrity level for each electric safety device.

Safety circuits, including programmable electronic systems designed in accordance with **5.11.2.6**, cover the requirements of **5.11.2.3.3**.

PESSRAL shall comply with the design rules for relevant safety integrity levels (SIL) as listed in **5.16** of IS 17900 (Part 2).

To avoid unsafe modification, measures to prevent unauthorized access to the program code and safety-related data of PESSRAL shall be provided, for example, using EPROM, access code, etc.

If a PESSRAL and a non-safety-related system share the same printed circuit board (PCB), the requirements of **5.10.3.2** shall apply for the separation of the two systems.

If a PESSRAL and a non-safety-related system share the same hardware, the requirements for PESSRAL shall be met.

It shall be possible to identify the failure state of the PESSRAL, either by a built-in system or by an external tool. If this external tool is a special tool, it shall be available on the site.

5.12 Controls — Final Limit Switches — Priorities

5.12.1 *Control of Lift Operations*

5.12.1.1 *Control of normal operation*

5.12.1.1.1 This control shall be carried out through buttons or similar devices, such as touch control, magnetic cards, etc. These shall be placed in boxes, such that no live parts are accessible to the user.

Free Standard provided by BIS via BSB Edge Private Limited to Akshay Chaudhary - Chennai(akshay.chdary@gmail.com) 136.238.2.51 [for non-commercial use only].

The colour yellow shall not be used for other control devices than the alarm initiation device.

5.12.1.1.2 The control devices shall be clearly identified by reference to their function, *see* also ISO 4190-5.

5.12.1.1.3 Visible notices or signals shall enable persons in the car to know at which landing the lift has stopped.

5.12.1.1.4 The stopping accuracy of the car shall be ±10 mm. If, during loading and unloading phases for example, the levelling accuracy of ±20 mm is exceeded, it shall be corrected to ±10 mm.

5.12.1.2 *Load control*

5.12.1.2.1 The lift shall be fitted with a device to prevent normal starting, including re-levelling, in the event of overload in the car. In the case of hydraulic lifts, the device shall not prevent re-levelling.

5.12.1.2.2 The overload shall be detected at the latest when the rated load is exceeded by 10 percent, with a minimum of 68 kg.

5.12.1.2.3 In the event of overload:

a) users shall be informed by an audible and a visible signal in the car;
b) automatic power-operated doors shall be brought into the fully open position;
c) manually operated doors shall remain unlocked;
d) any preliminary operation in accordance with **5.12.1.4** shall be nullified.

5.12.1.3 *Monitoring the normal slowdown of the machine in case of reduced buffer stroke*

In the case of **5.8.2.2.2**, electric safety devices in conformity with **5.11.2** shall check that the slowdown is effective before arrival at terminal landings.

If the slowdown is not effective, the machine brake shall cause the car speed to be reduced in such a way that if the car or the counterweight comes into contact with the buffers, the striking speed shall not exceed that for which the buffers were designed.

5.12.1.4 *Control of levelling, re-levelling and preliminary operation with doors not closed and locked*

Movement of the car with landing and car doors not closed and locked is permitted for levelling, re-levelling and preliminary operation on condition that:

a) the movement is limited to the unlocking zone (**5.3.8.1**) by an electric safety device in conformity with **5.11.2**. During preliminary operations, the car shall be kept within 20 mm from the landing (*see* **5.12.1.1.4** and **5.4.2.2.1**);
b) during levelling operations, the means for making the electric safety devices of doors inoperative shall only function after the stopping signal for this landing has been given;
c) the speed of levelling does not exceed 0.80 m/s. In addition, on lifts with manually controlled landing doors, it shall be checked that:
   1) for machines whose maximum speed of rotation is determined by the fixed frequency of the supply, only the control circuit for the low speed movement has been energized;
   2) for other machines, the speed at the moment the unlocking zone is reached does not exceed 0.80 m/s;
d) the speed of re-levelling does not exceed 0.30 m/s.

5.12.1.5 *Control of inspection operation*

5.12.1.5.1 *Design requirements*

5.12.1.5.1.1 To facilitate inspection and maintenance, a readily operable inspection control station shall be permanently installed:

a) on the car roof (**5.4.8 a**);
b) in the pit (**5.2.1.5.1 b**);
c) This sub clause number has not been used;
d) on a maintenance platform in the case of **5.2.6.4.5.6**.

5.12.1.5.1.2 The inspection control station shall consist of:

a) a switch (inspection operation switch) which shall satisfy the requirements for electric safety devices (**5.11.2**). This switch, which shall be bi-stable, shall be protected against involuntary operation;
b) direction push buttons “UP” and “DOWN” protected against accidental operation with the direction of movement clearly indicated;
c) a push button “RUN” protected against accidental operation;
d) a stopping device in conformity with **5.12.1.11**.

The control station may also incorporate special switches, protected against accidental operation, for controlling the mechanism of doors from the car roof.

5.12.1.5.1.3 The inspection control station shall have a minimum degree of protection of IPXXD (refer IS/IEC 60529).

Rotary control switches shall have a means of prevention of rotation of the stationary member. Friction alone shall not be considered sufficient.

5.12.1.5.2 *Functional requirements*

Free Standard provided by BIS via BSB Edge Private Limited to Akshay Chaudhary - Chennai(akshay.chdary@gmail.com) 136.238.2.51 [for non-commercial use only].

5.12.1.5.2.1 *Inspection operation switch*

The inspection operation switch, when in the inspection position, shall satisfy the following conditions for functioning simultaneously:

a) neutralize the normal operation controls;

b) neutralize emergency electrical operation (**5.12.1.6**);

c) levelling and re-levelling (**5.12.1.4**) shall be disabled;

d) any automatic movement of power-operated doors shall be prevented. Power-operated closing of the door(s) shall depend on:

   1) the operation of a direction push button for car movement; or

   2) additional switches protected against accidental operation for controlling the mechanism of doors.

e) the car speed shall not exceed 0.63 m/s;

f) the car speed shall not exceed 0.30 m/s when the vertical distance above any standing area on car roof (*see* **5.2.5.7.3**) or in pit is 2.0 m or less;

g) the limits of normal car travel shall not be overrun, that is, not exceed the stopping positions in normal operation;

h) the operation of the lift shall remain dependent on the safety devices;

j) if more than one inspection control station is switched to "INSPECTION", it shall not be possible to move the car from any of them, unless the same push buttons on the inspection control stations are operated simultaneously.

5.12.1.5.2.2 *Return-to-normal operation of the lift*

The return-to-normal operation of the lift shall only be effected by switching the inspection operation switch(es) back to normal.

Additionally, return-to-normal operation of the lift from the pit inspection station shall only be made under the following conditions:

a) the landing doors giving access to the pit are closed and locked;

b) all the stopping devices in the pit are inactive;

c) the electrical reset device outside the well is operated and located:

   1) in conjunction with emergency unlocking means of the door giving access to the pit; or

   2) in a place accessible to authorized persons only, for example, inside a locked cabinet located in close proximity to the door giving access to the pit.

Precautions shall be taken to prevent all involuntary movement of the car, in the event of one of the faults listed in **5.11.1.2** appearing in the circuit(s) involved in the inspection operation.

5.12.1.5.2.3 *Push buttons*

The movement of the car in inspection operation shall solely depend on constant pressure on a direction push button, and the "RUN" push button.

It shall be possible to operate the "RUN" button and a direction button with one hand simultaneously. The inspection operation electric safety device shall be bypassed by one of the following solutions:

a) a series connection of a direction and the "RUN" push button.

   These push buttons shall belong to the following categories, as defined in IS/IEC 60947-5-1:

   1) AC-15 for contacts in a.c. circuits;

   2) DC-13 for contacts in d.c. circuits.

   The durability shall be at least 1 000 000 mechanical and electrical operating cycles related to the applied load.

b) an electric safety device in accordance with **5.11.2** which is monitoring the correct operation of the direction and "RUN" push buttons.

5.12.1.5.2.4 *Inspection control station(s)*

The following information shall be given on the inspection control station(s) (*see* **Fig. 22**) the:

a) words **"NORMAL"** and **"INSPECTION"** on or near the inspection operation switch;

b) direction of motion identified by colours, as in **Table 17**.

5.12.1.6 *Control of emergency electrical operation*

5.12.1.6.1 If a means of emergency electrical operation is required in accordance with **5.9.2.3.3**, an emergency electrical operation switch in conformity with **5.11.2** shall be installed. The machine shall be supplied from the normal main supply, or from the stand-by supply if there is one.

The following conditions shall be satisfied simultaneously:

a) operation of the emergency electrical operation switch shall allow the control of car movement by constant pressure on buttons protected against accidental operation. The direction of movement shall be clearly indicated.

b) after operation of the emergency electrical operation switch, all movement of the car, except that controlled by this switch, shall be prevented.

Free Standard provided by BIS via BSB Edge Private Limited to Akshay Chaudhary - Chennai(akshay.chdary@gmail.com) 136.238.2.51 [for non-commercial use only].

Table 17 Inspection Control Station — Button Designations

(*Clause* 5.12.1.5.2.4)

Sl No.	Control	Colour of Button	Colour of Symbol	Symbol Reference	Symbol
(1)	(2)	(3)	(4)	(5)	(6)
i)	UP	White	Black	IEC 60417-5022	
ii)	DOWN	Black	White	IEC 60417-5022	
iii)	RUN	Blue	White	IEC 60417-5023	

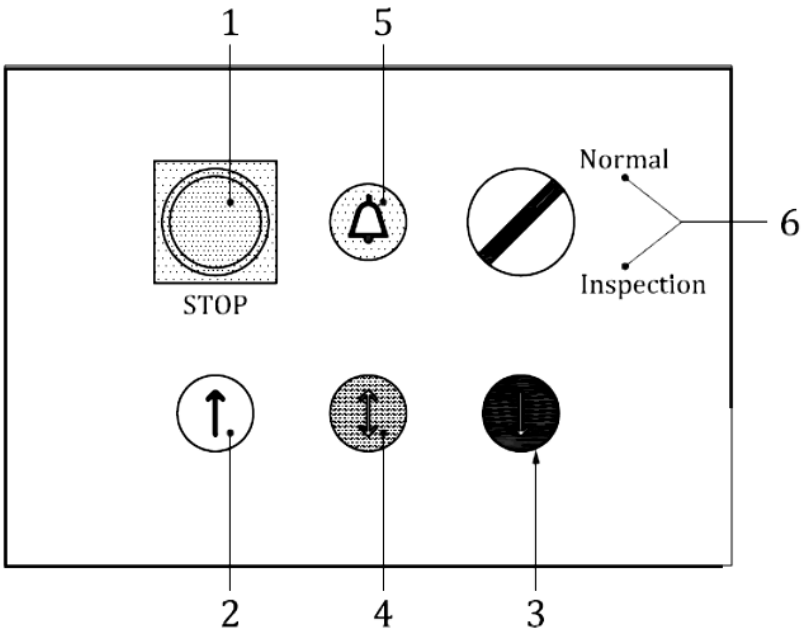

Key

1 stopping device
2 upwards push button
3 downward push button
4 RUN push button
5 alarm push button
6 normal/inspection switch

NOTE — Placing the alarm button in the control station is optional.

FIG. 22 INSPECTION CONTROL STATION — CONTROLS AND PICTOGRAMS

Free Standard provided by BIS via BSB Edge Private Limited to Akshay Chaudhary - Chennai(akshay.chdary@gmail.com) 136.238.2.51 [for non-commercial use only].

c) the effects of the emergency electrical operation shall be overridden by switching on the inspection operation as follows:
   1) when actuating the emergency electrical operation switch while the inspection operation is actuated, the emergency electrical operation is inactive, the up/down/run buttons of the inspection operation shall remain effective;
   2) when actuating the inspection operation while the emergency electrical operation is actuated, the emergency electrical operation becomes inactive, the up/down/run buttons of the inspection operation shall become effective.

d) the emergency electrical operation switch shall render inoperative, by itself or through another electric switch in conformity with **5.11.2**, the following electric devices:
   1) those used for checking slack suspension means, according to **5.5.5.3 b)**;
   2) those mounted on the car safety gear, according to **5.6.2.1.5**;
   3) those for overspeed, according to **5.6.2.2.1.6 a)** and **b)**;
   4) those mounted on the ascending car overspeed protection means, according to **5.6.6.5**;
   5) those mounted on the buffers, according to **5.8.2.2.4**;
   6) final limit switches, according to **5.12.2**.

e) the emergency electrical operation switch and its push buttons shall be placed so that the machine can be observed directly or by display devices (**5.2.6.6.2 c**);

f) the car speed shall not exceed 0.30 m/s.

5.12.1.6.2 The emergency electrical operation means shall have a minimum degree of protection of IPXXD (IS/IEC 60529).

Rotary control switches shall have a means of prevention of rotation of the stationary member. Friction alone shall not be considered sufficient.

5.12.1.7 *Protection for maintenance operations*

The control system shall be provided with means to:

a) prevent the lift from answering to landing calls and remote commands;

b) disable the automatic door operation;

c) give at least terminal floor calls for maintenance.

The means shall be clearly indicated and only accessible to authorized persons.

5.12.1.8 *Landing and car door bypass device*

5.12.1.8.1 For maintenance of contacts of the landing door, car door, and door locking, a bypass device shall be provided in the control panel or emergency and test panel.

5.12.1.8.2 The device(s) shall be a switch protected against unintended use by mechanically movable means (for example, cover, security cap) permanently installed, or a plug socket combination which shall satisfy the requirements for electric safety devices according **5.11.2**.

5.12.1.8.3 The landing and car door bypass devices shall be identifiable by the word "BYPASS" written on or near to them. In addition, the contacts to be bypassed shall be indicated with the identifiers according to the electrical diagrams.

Alternatively, the symbol shown in **Fig. 23** together with an identifier according to electric diagrams can be used.

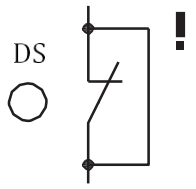

Key

DS example of designation found on the wiring diagram

FIG. 23 BYPASS PICTOGRAM

The activation state of the bypass device(s) shall be clearly indicated. The following conditions for functioning shall be satisfied:

a) normal operation controls, including the operation of any automatic power-operated doors, shall be neutralized;

b) bypassing the contacts of the landing doors (**5.3.9.4**, **5.3.11.2**), the landing door locks (**5.3.9.1**), the car door(s) (**5.3.13.2**) and the car door locks (**5.3.9.2**) shall be possible;

c) it shall not be possible to bypass the contacts of the car door(s) and landing doors at the same time;

d) a separate monitoring signal shall be provided to check that the car door(s) is/are in the closed position in order to allow a car movement with bypassed car door closed contact(s). This applies also if the car door closed contact(s) and the car door locked contact(s) are combined;

e) in case of manually operated landing doors, it shall not be possible to bypass the contacts of the landing doors (**5.3.9.4**) and the landing door locks (**5.3.9.1**) at the same time;

Free Standard provided by BIS via BSB Edge Private Limited to Akshay Chaudhary - Chennai(akshay.chdary@gmail.com) 136.238.2.51 [for non-commercial use only].

f) movement of the car shall only be possible in inspection operation (**5.12.1.5**) or emergency electrical operation (**5.12.1.6**);

g) an audible signal in the car and a flashing light under the car shall be activated during movement.

The sound level of the audible warning shall be minimum 55 dB(A) below the car at a distance of 1 m.

5.12.1.9 *Prevention of normal operation of the lift with faulty door contact circuits*

The correct operation of the electric safety device checking closed position of car door (**5.3.13.2**), the electric safety device checking locked position of landing door locking device (**5.3.9.1**) and the monitoring signal referred to in **5.12.1.8.3 d)**, shall be monitored while the car is in the unlocking zone, the car door is opened and the landing door lock is released.

If devices are detected as faulty, the normal operation of the lift shall be prevented.

5.12.1.10 *Electrical anti-creep system (see* **Table 12***)*

An electrical anti-creep system shall satisfy the following conditions:

a) the car shall be dispatched automatically to the lowest landing within 15 min after the last normal journey;

b) in the case of a lift provided with manually operated doors, or with power-operated doors where closing is carried out under the continuous control of the users, there shall be a notice in the car as follows: "**CLOSE DOORS**". The minimum height of the characters shall be 50 mm;

c) there shall be an inscription on or near the main switch as follows: "**Switch off only when the car is at the lowest landing**".

5.12.1.11 *Stopping devices*

5.12.1.11.1 A stopping device shall be provided for stopping, and maintaining the lift out of service, including the power-operated doors:

a) in the lift pit [**5.2.1.5.1 a)**];

b) in the pulley room [**5.2.1.5.2 c)**];

c) on the car roof [**5.4.8 b)**];

d) at the inspection control devices [**5.12.1.5.1.2 d)**];

e) at the lift machine, unless there is a main switch or another stopping device nearby that is directly accessible within 1 m;

f) at the test panel(s) (**5.2.6.6**), unless there is a main switch or another stopping device nearby that is directly accessible within 1 m.

The marking "**STOP**" shall be on or near the stopping device.

5.12.1.11.2 The stopping devices shall consist of electric safety devices in conformity with **5.11.2**.

They shall be bi-stable and such that a return to service cannot result from an involuntary action. Button type devices according to IS/IEC 60947-5-5 shall be used as stopping device.

5.12.1.11.3 A stopping device in the car shall not be used.

5.12.2 *Final Limit Switches*

5.12.2.1 *General*

Final limit switches shall be provided:

a) at top and bottom of travel for traction and positive drive lifts;

b) at top of travel only for hydraulic lifts.

Final limit switches shall be set to function as close as possible to the terminal floors, without risk of accidental operation.

They shall operate before the car (or counterweight if there is one) comes into contact with the buffers or the ram comes into contact with its cushioned stop. The actuation of the final limit switches shall be maintained while the buffers are compressed or the ram is in the zone of the cushioned stop.

5.12.2.2 *Actuation of the final limit switches*

5.12.2.2.1 Separate actuating devices shall be used for normal terminal stopping and final limit switches.

5.12.2.2.2 In the case of positive drive lifts, actuation of the final limit switches shall be effected by:

a) a device linked to the movement of the machine;

b) the car and by the balancing weight, if there is one, at the top of the well; or

c) the car at the top and the bottom of the well, if there is no balancing weight.

5.12.2.2.3 In the case of traction drive lifts, actuation of the final limit switches shall be effected either:

a) directly by the car at the top and bottom of the well; or

b) indirectly by a device linked to the car, for example, by a rope or belt.

In case b), breakage of, or slack in, this linkage shall cause the machine to stop by means of an electric safety device in conformity with **5.11.2**.

5.12.2.2.4 In the case of direct acting hydraulic lifts, actuation of the final limit switch shall be effected either:

a) by the car or the ram, or

Free Standard provided by BIS via BSB Edge Private Limited to Akshay Chaudhary - Chennai(akshay.chdary@gmail.com) 136.238.2.51 [for non-commercial use only].

b) indirectly by a device linked to the car, for example, by a rope or belt.

In case b) the machine shall be stopped by means of an electric safety device in conformity with **5.11.2** if breakage or slack in this linkage occurs.

5.12.2.2.5 In the case of indirect acting hydraulic lifts, actuation of the final limit switch shall be effected:

a) either directly by the ram; or

b) indirectly by a device linked to the ram, for example, by a rope or belt.

In case b), the machine shall be stopped by means of an electric safety device in conformity with **5.11.2** if breakage of, or slack in, this linkage occurs.

5.12.2.3 *Method of operation of final limit switches*

5.12.2.3.1 The final limit switch(es) shall open:

a) directly by positive mechanical separation of the circuits feeding the motor and brake; or

b) an electric safety device in conformity with **5.11.2**.

5.12.2.3.2 After the operation of the final limit switches, car movement in response to car and landing calls shall no longer be possible, even in the case of the car leaving the actuation zone by creeping for hydraulic lifts.

When an electrical anti-creep system as per **5.12.1.10** is used, the automatic despatch of the car according to **5.12.1.10 a)** shall come into operation immediately as soon as the car leaves the actuation zone of the final limit switch.

The return to normal operation of the lift shall require the intervention of a competent maintenance person.

5.12.2.4 *Terminal Slow down and Normal Stopping Limit switches*

5.12.2.4.1 Every electric lift shall be provided with upper and lower terminal slowdown and normal stopping limit switches arranged to stop the car automatically within the limits of top car clearance and bottom run by (overtravel) from any speed attained in normal operation as per Table 17A below. Such limit switches shall act independently of the operating device and the final limit switches.

5.12.2.4.2 All slowdown and normal stopping Limit switches shall be either Electro mechanical, Electronic, Optical or Magnetic type. In case of electromechanical limits switches, contacts of all terminal limit switches shall be opened positively and mechanically by the movement of the lift car. Electronic, optical or magnetic type terminal limit switches shall be in compliance with **5.12.2.4.5** below.

5.12.2.4.3 Terminal slow down and normal stopping limits switches may be fitted in the lift car or in the lift well or in the machine room, and such switches shall be brought into operation by the movement of the lift car. If such switches are fitted on the car, then sufficient electrical isolation need to be ensured for the wires used in the trailing cables used.

5.12.2.4.4 When terminal slow down and stopping limit switches are situated in the machine room they shall be mounted on and operated by the slowdown and stopping device mechanically connected to and driven by the lift car without dependence upon friction as a driving means. An automatic safety switch shall be provided to stop the machine should the tape, chain, rope or other similar device mechanically connecting the stopping device to the car fail.

5.12.2.4.5 If the terminal slowdown limit switches are of electronic, optical or magnetic type, then a detection mechanism by means of software, to ensure proper functioning of the limit switches, must be in place. Such detection should take place automatically every time the elevator car reaches top or bottom terminal landings. In case of failure to detect such limit switches, for proper functioning, the elevator shall be shut down automatically. It shall not be possible to RESET this tripped elevator without manual intervention by competent person.

Table 17 A Terminal Limit Switch Requirements for Elevators

(*Clause* 5.12.2.4.1)

Sl No.	Elevator Speed	Control Type	Slow Down Limit Switch	Normal Stopping Limit Switch	Final Limit Switch
(1)	(2)	(3)	(4)	(5)	(6)
i)	< 0.7 m/s	Single Speed (AC1)	Optional	Required	Required
ii)	< 0.7 m/s	All except AC1	Required	Optional	Required
iii)	≥ 0.7 m/s	All except AC1	Required	Required [1)]	Required

[1)] Not required if Slow down switch is monitored or detected as per **5.12.2.4.5** and **5.12.2.4.6.**

Free Standard provided by BIS via BSB Edge Private Limited to Akshay Chaudhary - Chennai(akshay.chdary@gmail.com) 136.238.2.51 [for non-commercial use only].

5.12.2.4.6 In the event of having provided such detection mechanism for terminal slow down switches, as per **5.12.2.4.5** above, normal terminal stopping switches may not be required.

5.12.3 *Emergency Alarm Device and Intercom System and Automatic Rescue Device (ARD)*

5.12.3.1 Every lift shall be provided with one or more electric alarm bell(s) powered by the emergency supply referred to in **5.4.10.4** located in building, audible outside the lift well (especially at the designated floor) and operable from inside the lift car, from car top and pit.

5.12.3.2 An intercom system, or similar device, powered by the emergency supply referred to in **5.4.10.4**, shall be installed for communication between inside the car, someone outside the lift (security/reception/ BMS room) and the place from which the emergency operation is carried out, if the lift travel exceeds 15 m or if direct acoustic communication in- between these locations is not possible.

5.12.3.3 *Automatic rescue device (ARD)*

5.12.3.3.1 Every lift shall be provided with automatic rescue device (ARD) operated on battery, to take the lift to the nearest possible landing in case of failure of main or primary power supply to the lift.

5.12.3.3.2 In case of lift equipped with secondary or alternate source of power supply (for example, generator, UPS) with automatic change over switch (for example, AMF-automatic mains failure panel), the provision of ARD is optional. In case an online UPS is used for running the lift in normal operation, the lift shall be parked at a floor with doors open before the battery gets too low for further safe operation.

5.12.3.3.3 For the lift with ARD, an audio-visual indicator shall be provided inside the lift car to alert the passenger(s) trapped inside the car that the lift is on emergency power or there is a mains power failure & they are being rescued. Emergency light arrangement in the lift car shall be operational at least till the end of rescue operation.

5.12.3.3.4 The capacity of ARD batteries shall be such that minimum three consecutive rescue operations can be performed without recharging for the maximum travel distance between two consecutive served stops.

5.12.3.3.5 Stopping accuracy of ± 40 mm shall be achieved in ARD Operation.

5.12.3.3.6 It is recommended to additionally have a suitable audio alarm with visual indication or voice annunciation in the lift car or lift controller to indicate "Low battery" of ARD.

5.12.3.3.7 ARD shall operate in case of failure of any one phase, or any two phases, or all the three phases. It shall also operate during phase reversals (in non-VF type lifts where phase failure relays are installed).

5.12.3.3.8 ARD shall operate only when all safety circuits are operational. The safety circuits shall be checked & verified continuously during the rescue operation.

5.12.4 *Priorities and Signals*

5.12.4.1 For lifts with manual doors, a device shall prevent the car leaving a landing for a period of at least 2 s after stopping.

5.12.4.2 A passenger entering the car shall have at least 2 s after the doors have closed, to actuate a control device before any external call buttons can become effective.

This requirement need not apply in the case of lifts operating on collective control.

5.12.4.3 In the case of collective control, an illuminated signal, which is clearly visible from the landing, shall indicate to the users waiting on this landing the direction of the next movement imposed on the car.

For groups of lifts, position indicators on the landings are not recommended. However, it is recommended that the arrival of a car be preceded by an audible signal.

5.12.5 *Fire Protection Requirements of Lifts in High Rise Buildings*

5.12.5.1 *Buildings of height 15 m and above*

Following requirements over and above those specified are applicable to all lifts provided in buildings having height 15 m and above.

5.12.5.1.1 All materials of constructions in load bearing elements, stairways and corridors and facades shall be non-combustible.

5.12.5.1.2 The interior finishing materials shall be very low flame spread.

5.12.5.1.3 Walls of the lift well enclosure shall have a fire rating of 2 h; the lift well shall have a vent at the top of area not less than 0.2 m^2.

5.12.5.1.4 Lift motor room shall be located preferably on top of the shaft and separated from the shaft by the floor of the room.

5.12.5.1.5 *Landing doors*

Lift landing doors shall be imperforate. Collapsible doors shall not be permitted. Lift landing doors provided in the lift enclosure shall have a minimum fire resistance of one hour.

Free Standard provided by BIS via BSB Edge Private Limited to Akshay Chaudhary - Chennai(akshay.chdary@gmail.com) 136.238.2.51 [for non-commercial use only].

5.12.5.1.6 The number of lifts in one row for a lift bank should preferably not exceed 4 and the total number of lifts in the bank (of two rows) shall not exceed 8.

5.12.5.1.7 *Lift car door*

Lift car doors shall be imperforate. Collapsible car doors shall not be permitted.

5.12.5.1.8 If the lift shafts along with the lift lobby are in the core of the building, a positive pressure between 25 and 30 Pa shall be maintained in the lobby in case of fire. The mechanism for pressurization shall act automatically with the fire alarm. It shall be possible to operate the mechanism manually also.

5.12.5.1.9 Exit from the lift lobby if located in the core of the building shall be through a self-closing (acting upon operation of fire alarm system) smoke-stop door of one hour fire resistance.

5.12.5.1.10 Lifts shall not normally communicate with the basement, however if lifts are in communication, the lift lobby in the basement shall be pressurized as in **5.12.5.1.8** with self-closing (acting upon operation of fire alarm system) door of two hour fire resistance.

5.12.5.1.11 Telephone or other communication facilities shall be provided in lift the car and the lift main lobby. Communication system for lifts shall also be connected to the fire control room of the building if provided.

5.12.5.1.12 Sign shall be posted and maintained on every floor at or near the lift indicating that in case of fire, occupants shall use the stairs unless instructed otherwise. The sign shall have the plan of the respective floor showing location of the stairways.

5.12.5.1.13 All lifts (fire lifts/non fire lifts) shall be provided with Phase I operation as per **5.12.5.1.16** (grounding operation).

5.12.5.1.14 The grounding operation may be initiated by individual switches for lifts or a common switch for a group of lifts or by a signal from fire alarm system of the building if available.

5.12.5.1.15 *Fireman's lift*

The fireman's lift is provided in a building for the purpose of aiding firefighters in evacuating trapped persons in the building and to take the equipment for fighting fire to upper levels with minimum delay. Some lifts out of all the lifts shall be identified as fireman's lifts.

The number of required Fireman's lifts and their locations in a building will vary depending on the size, design, complexity of the building. Some considerations are as follows:

a) There shall be at least one fireman's lift per building;
b) If there are multiple wings in the building, there shall be at least one fireman's lift per wing;
c) If there are multiple banks of lifts in the building there shall be at least one fireman's lift per bank of lifts;
d) If the building height is up to 600 m and it is zoned height wise and it does not have fireman's lift serving every floor of the building, then there shall be at least one fireman's lift per zone which shall serve the main level/fire access level and shall serve all the floors in the respective zone;
e) If the building height is more than 600 m and it does not have any single lift serving all the floors, that is, it has all lifts serving only respective zones, the fireman's lift shall be provided in each zone separately with a transfer landing for transferring from one zone to another.

5.12.5.1.16 To be effective in firefighting operation the fireman's lift shall have following requirements:

a) The fire lift may be used by the occupants in normal times.
b) The fireman's lift shall be provided with a fireman's Switch. The switch shall be a two position (ON/OFF) switch fixed at the evacuation floor (normally main entrance floor) for enabling the lift to be put into fireman's mode. The switch shall be situated in a glass-fronted box with suitable label and fixed adjacent to the lift at the entrance level. When the switch is on, landing call-points shall become inoperative and the lift shall be on the car control only or on a priority control device. When the switch is off, the lift will return to normal working.
c) The fireman's lift shall be provided with an audio and visual signal in the car.
d) The fireman's lift shall have a floor area of minimum 1.43 m^2. It shall have loading capacity of not less than 544 kg (8 persons lift).
e) The fireman's lift shall be provided with power operated automatic doors of minimum 0.8 m width.
f) The fire lift shall be able to reach the highest landing to be served in firefighting operations from the fire service access level within 60 s, from after the closing of the lift doors.
g) Reliable alternate source of power supply should be provided for all fire lifts through a manually/automatically operated change-over switch. The route of wiring shall be safe from fire.

Free Standard provided by BIS via BSB Edge Private Limited to Akshay Chaudhary - Chennai(akshay.chdary@gmail.com) 136.238.2.51 [for non-commercial use only].

h) Suitable arrangements such as providing slope in the floor of lift lobby shall be made at all the landings to prevent water used during firefighting from entering the lift shafts.

j) The words 'Fire Lift' shall be conspicuously displayed in fluorescent paint on the lift landing doors/lift landings at each floor level.

k) Operational requirements of fireman's lift — The lift shall be provided with the following operational controls, phase I and Phase II.

Phase I: Return to evacuation floor — Shall start when the fireman's switch at the evacuation floor is turned to the "ON" position or the signal from smoke detector (if provided by the Building Management System) is on. All lifts controlled by this switch shall cancel all existing car calls and separate from landing calls and no landing or car calls shall be registered. The audio and visual signal shall be turned on. All heat and smoke sensitive door reopening devices shall be rendered inoperative.

If the lift is travelling towards the evacuation floor, it shall continue driving to that floor.

If the lift is travelling away from the evacuation floor, it shall reverse its direction at the nearest possible floor without opening its doors and return nonstop to the evacuation floor.

If the lift is standing at a floor other than the evacuation floor, it shall close the doors and start travelling non-stop to the evacuation floor.

When at the evacuation floor, the lift shall park with doors open.

The buzzer is turned off after this return drive.

Phase II: Operation of the lift shall be as defined below — The phase 2 is started after phase 1, if the fireman's switch is "ON".

The lift does not respond to landing calls but registers car calls. All heat and smoke sensitive door reopening devices are rendered inoperative.

When the car call button is pressed, the doors start closing. If the button is released before the doors are fully closed, they re-open. The car call is registered only when the doors are fully closed.

After registering a car call, the lift starts driving to the call. If more than one car call is registered, only the nearest call is answered and the remaining calls will be cancelled at the first stop.

At the floor, the doors are opened by pushing the door open button. If the button is released before the doors are fully open, they re-close.

The lift returns to normal service when it stands at the evacuation floor with doors open and the switch is "OFF".

5.12.5.1.17 The operation of fireman's lift shall be by means of a full set of push buttons in the car. Other operating systems shall be rendered inoperative.

5.12.5.2 *Buildings of height 60 m and above*

The following requirements over and above those specified in **5.12.5.1** are applicable to the Lifts and Lift Enclosures provided in buildings having height 60 m and above.

5.12.5.2.1 *Fire lifts*

Following additional requirements apply to all fire lifts in the building.

a) The fireman's lift shall have loading capacity of not less than 1 000 kg.

b) Electrical equipment within the firefighters lift well and on the car, located within 1.0 m of any wall containing a landing door, shall be protected from dripping and splashing water or provided with enclosures classified to at least IPX3 as per IS/IEC 60529.

c) The electrical switchgear placed less than 1 m above lift pit floor shall be protected to IP 67 as per IS/IEC 60529. The socket outlet and lowest lamp shall also be located at least 0.5m above the highest permissible water level in the pit.

d) Suitable means shall be provided in the lift pit to ensure that water will not rise above the level of the fully compressed car buffer.

e) Means shall be provided to prevent the water level in the pit from reaching equipment which could create a malfunction of the fireman's lift.

f) Each landing entrance of the lift shall have fire protected lobby. Exit from the lift lobby shall be through a self-closing smoke stop door of 1 h fire resistance.

g) Alternate source of power supply shall be provided for all fire lifts through automatically operated changeover switch. In case of failure of normal electric supply, it shall automatically trip over to alternate supply. The route of wiring shall be safe from fire.

5.12.5.2.2 There shall be Fire Command Centre (FCC) and/or Building Management System (BMS) room in the building. CCTV cameras shall be fixed in the lift lobbies and the display screen(s) shall be placed in the FCC or BMS room.

6 VERIFICATION OF THE SAFETY REQUIREMENTS AND/OR PROTECTIVE MEASURES

6.1 Technical Compliance Documentation

Technical compliance documentation shall be provided to facilitate the verification according to **6.2**. The

Free Standard provided by BIS via BSB Edge Private Limited to Akshay Chaudhary - Chennai(akshay.chdary@gmail.com) 136.238.2.51 [for non-commercial use only].

technical compliance documentation shall contain the necessary information to ascertain that the constituent parts are correctly designed and the installation is in conformity with this standard.

NOTE — **Annex B** gives guidance on the information to be included in the technical compliance documentation.

6.2 Verification of Design

Table 18 indicates the methods by which the safety requirements and/or protective measures described in **5** shall be verified. Secondary sub-clauses, which are not listed in the table, are verified as part of the quoted sub-clause. For example, **5.2.2.4** is verified as part of **5.2.2**.

6.3 Examinations and Tests before Putting Into Service

Before the lift is put into service, the particular tests specified in **6.3.1** to **6.3.14**, as referred to in **Table 18**, shall be carried out.

Table 18 Means of Verification of the Safety Requirements and/or Protective Measures

(*Clauses* 6.2 *and* 6.3.1)

Sub-clause	Safety Requirements	Visual Inspection[a]	Performance Check/ test[b]	Measurement[c]	Drawing/ Calculation[d]	User Information[e]
(1)	(2)	(3)	(4)	(5)	(6)	(7)
5.1	**General**					
5.1.1	Non-significant hazards	✓				✓
5.1.2	Notices and Labels	✓				✓
5.2	**Well, machinery spaces and pulley rooms**					
5.2.1	General provisions	✓	✓	✓	✓	✓
5.2.2	Access to well and to machinery spaces and pulley rooms	✓		✓		✓
5.2.3	Access and emergency doors — Access trap doors — Inspection doors	✓		✓		✓
5.2.4	Notices	✓				✓
5.2.5	Well	✓	✓	✓	✓	✓
5.2.6	Machinery spaces and pulley rooms	✓	✓	✓	✓	✓
5.3	**Landing doors and car doors**					
5.3.1	General provisions	✓		✓	✓	
5.3.2	Height and width of entrances			✓	✓	
5.3.3	Sills, guides, door suspension	✓			✓	
5.3.4	Horizontal door clearances	✓	✓	✓	✓	✓
5.3.5	Strength of landings and car doors	✓	✓	✓	✓	✓
5.3.6	Protection in relation to door operation	✓	✓	✓	✓	✓
5.3.7	Local landing lighting and “car here” signal lights	✓	✓	✓		✓
5.3.8	Locking and closed landing door check	✓	✓			✓
5.3.9	Locking and emergency unlocking of landing and car doors	✓	✓			✓
5.3.10	Requirements common to devices for proving the locked condition and the closed condition of the landing door		✓			
5.3.11	Sliding landing doors with multiple, mechanically linked panels	✓	✓		✓	
5.3.12	Closing of automatically operated landing doors	✓	✓		✓	✓

Free Standard provided by BIS via BSB Edge Private Limited to Akshay Chaudhary - Chennai(akshay.chdary@gmail.com) 136.238.2.51 [for non-commercial use only].

Table 18 (*Continued*)

Sub-clause	Safety Requirements	Visual Inspection[a]	Performance Check/ test[b]	Measurement[c]	Drawing/ Calculation[d]	User Information[e]
(1)	(2)	(3)	(4)	(5)	(6)	(7)
5.3.13	Electric safety device for proving the car doors closed	✓	✓			✓
5.3.14	Sliding or folding car doors with multiple, mechanically linked panels	✓	✓		✓	
5.3.15	Opening the car door	✓	✓		✓	
5.4	**Car, counterweight and balancing weight**					
5.4.1	Height of car			✓	✓	✓
5.4.2	Available car area, rated load, number of passengers		✓	✓	✓	✓
5.4.3	Walls, floor and roof of the car	✓			✓	
5.4.4	Car door, floor, wall, ceiling and decorative materials	✓			✓	
5.4.5	Apron	✓		✓	✓	
5.4.6	This sub clause number has not been used.					
5.4.7	Car roof	✓		✓	✓	
5.4.8	Equipment on top of the car	✓	✓			
5.4.9	Ventilation	✓			✓	
5.4.10	Lighting	✓		✓	✓	✓
5.4.11	Counterweight/balancing weight	✓			✓	
5.5	**Suspension means, compensation means and related protection means**					
5.5.1	Suspension means	✓		✓	✓	✓
5.5.2	Sheave, pulley, drum and rope diameter ratios, rope terminations	✓		✓	✓	
5.5.3	Rope traction		✓		✓	
5.5.4	Winding up of ropes for positive drive lifts		✓		✓	
5.5.5	Distribution of load between the ropes	✓	✓		✓	
5.5.6	Compensation means		✓		✓	
5.5.7	Protection for sheaves, pulleys	✓			✓	
5.5.8	Traction sheave and pulleys in the well	✓		✓	✓	
5.6	**Precautions against free fall, excessive speed, unintended car movement and creeping of the car**					
5.6.1	General provisions	✓			✓	✓
5.6.2	Safety gear and its trip- ping means	✓	✓		✓	✓
5.6.3	Rupture valve	✓	✓		✓	✓
5.6.4	Restrictors	✓	✓	✓	✓	
5.6.5	Pawl device	✓	✓		✓	
5.6.6	Ascending car over- speed protection means	✓	✓	✓	✓	✓
5.6.7	Protection against un- intended car movement	✓	✓	✓	✓	✓
5.7	**Guide rails**					
5.7.1	Guiding of the car, counterweight or balancing weight	✓			✓	✓

Free Standard provided by BIS via BSB Edge Private Limited to Akshay Chaudhary - Chennai(akshay.chdary@gmail.com) 136.238.2.51 [for non-commercial use only].

Table 18 (*Concluded*)

Sub-clause	Safety Requirements	Visual Inspection[a]	Performance Check/ test[b]	Measurement[c]	Drawing/ Calculation[d]	User Information[e]
(1)	(2)	(3)	(4)	(5)	(6)	(7)
5.7.2	Permissible stresses and deflections	✓			✓	
5.7.3	Combination of loads and forces				✓	
5.7.4	Impact factors				✓	
5.8	**Buffers**					
5.8.1	Car and counterweight buffers	✓	✓	✓	✓	✓
5.8.2	Stroke of car and counterweight buffers	✓	✓		✓	✓
5.9	**Lift machinery and associated equipment**					
5.9.1	General provision	✓			✓	
5.9.2	Lift machine for traction lifts and positive drive lifts	✓	✓	✓	✓	✓
5.9.3	Lift machine for hydraulic lifts	✓	✓	✓	✓	✓
5.10	**Electric installations and appliances**					
5.10.1	General provisions	✓	✓	✓	✓	✓
5.10.2	Incoming supply conductor terminations				✓	
5.10.3	Contactors, contactor relays, components of safety circuits	✓	✓		✓	
5.10.4	Protection of electrical equipment	✓	✓		✓	✓
5.10.5	Main switches	✓	✓		✓	✓
5.10.6	Electric wiring	✓			✓	
5.10.7	Lighting and socket outlets	✓	✓		✓	✓
5.10.8	Control of the supply for lighting and socket outlets	✓	✓		✓	✓
5.10.9	Protective earthing		✓		✓	
5.10.10	Electrical identification	✓			✓	✓
5.11	**Protection against electric faults; failure analysis; electric safety devices**					
5.11.1	Protection against electric faults; failure analysis	✓	✓		✓	✓
5.11.2	Electric safety devices	✓	✓		✓	✓
5.12	**Controls — Final limit switches — Priorities**					
5.12.1	Control of lift operations	✓	✓	✓	✓	✓
5.12.2	Final limit switches	✓	✓		✓	
5.12.3	Emergency alarm device and intercom system	✓	✓	✓	✓	✓
5.12.4	Priorities and signals	✓	✓	✓	✓	✓

[a] Visual inspection is used to verify the features necessary for the requirement, by visual examination of the components supplied.

[b] A performance check/test verifies that the features provided perform their function in such a way that the requirement is met.

[c] Measurement verifies, by the use of instruments, that requirements are met to the specified limits.

[d] Drawings/calculations verify that the design characteristics of the components provided meet the requirements.

[e] Verify that the relevant point is dealt with in the instructions handbook or by marking.

Free Standard provided by BIS via BSB Edge Private Limited to Akshay Chaudhary - Chennai(akshay.chdary@gmail.com) 136.238.2.51 [for non-commercial use only].

6.3.1 *Braking System* **(5.9.2.2)**

The test shall demonstrate that:

a) the electro-mechanical brake on its own is capable of stopping the machine when the car is travelling downwards at the rated speed and with the rated load plus 25 percent. In these conditions, the retardation of the car shall not exceed that resulting from operation of the safety gear or stopping on the buffer;

b) additionally, it shall be verified by practical tests that, where one brake set is not working, a sufficient braking effort is exerted to decelerate the car travelling downwards at the rated speed and with the rated load (*see* **5.9.2.2.2.1**);

c) with the car loaded within the limits of **Formulae (20)** and **(21)**:

$$(q - 0.1) \times Q \quad (20)$$

$$(q + 0.1) \times Q \quad (21)$$

where

q is the balance factor indicating the amount of counterbalance of the rated load by the counter- weight,

Q is the rated load.

it shall be verified that the manual release of the brake (**5.9.2.2.2.7**) causes a natural movement of the lift, or that the means for that purpose (**5.9.2.2.2.9 b**) are available and operative.

6.3.2 *Electric Installation*

The following tests shall be performed:

a) visual check (for example, damage, loose wires, all earth wires connected);

b) continuity of the protective conductors according to **6.2.3.2 a)** of IS 732 (**5.10.9**);

c) measurement of the insulation resistance of the different circuits (**5.10.1.3**). For this measurement, all the electronic components shall be disconnected;

d) verification of the effectiveness of the measures for fault protection (protection against indirect contact) by automatic disconnection of supply according to **6.2.3.6** and **6.2.3.7** of IS 732.

6.3.3 *Checking of the Traction* (**5.5.3**)

The traction shall be checked by making several stops with the most severe braking compatible with the installation. At each test, complete stoppage of the car shall occur.

The test shall be carried out:

a) ascending, with the car empty, in the upper part of the travel;

b) descending, with the car loaded with 125 percent of the rated load, in the lower part of the travel.

The counterweight shall be brought into contact with the buffer(s) and the machine shall continue to be turned until suspension means slippage occurs. If slippage does not occur, the car shall not be raised. It shall be checked that the balance is as stated by the installer.

6.3.4 *Car Safety Gear* (**5.6.2**)

The aim of the test, before putting into service, is to check the correct mounting, correct setting and the soundness of the complete assembly, comprising car and decorative finishes, safety gear, guide rails and their fixing to the building.

The test shall be made while the car is descending, with the required load uniformly distributed over the car area, the machine running until the suspension means slip or become slack, and under the following conditions:

a) instantaneous safety gear:

The car shall travel at the rated speed and be loaded either:

1) with the rated load when the rated load corresponds to **Table 6 or Table 7** (**5.4.2.1**), or

2) for hydraulic lifts, with 125 percent of the rated load, except that the load shall not exceed the corresponding **Table 7** load when the rated load is smaller than the value given in **Table 7** (**5.4.2.1**).

b) progressive safety gear:

For traction drive lifts, the car shall be loaded with 125 percent of the rated load, and travel at the rated speed or lower.

For positive drive lifts and hydraulic lifts, when the rated load corresponds with **Table 6 or Table 7** (**5.4.2.1**), the car shall be loaded with the rated load, and travel at the rated speed or lower.

For hydraulic lifts, when the rated load is smaller than the value given by **Table 7** (**5.4.2.1**), the car shall be loaded with 125 percent of the rated load, except that the load shall not exceed the corresponding **Table 7** load, and travel at rated speed or lower.

When the test is made at a speed lower than the rated speed, the manufacturer shall provide curves to illustrate the behaviour of the type tested progressive safety gear when dynamically tested with the suspensions attached.

After the test, it shall be ascertained that no deterioration, which could adversely affect the normal use of the lift has occurred. If necessary, friction components may be replaced. Visual check is considered to be sufficient.

Free Standard provided by BIS via BSB Edge Private Limited to Akshay Chaudhary - Chennai(akshay.chdary@gmail.com) 136.238.2.51 [for non-commercial use only].

In order to facilitate disengagement of the safety gear, it is recommended that the test be carried out opposite a door in order to be able to unload the car.

6.3.5 *Counterweight or Balancing Weight Safety Gear* (**5.6.2**)

The aim of the test, before putting into service, is to check the correct mounting, correct setting and the soundness of the complete assembly, comprising counterweight or balancing weight, safety gear, guide rails and their fixing to the building.

The test shall be made while the counterweight or the balancing weight is descending, and under the following conditions. The machine shall remain running until the ropes slip or become slack:

a) for instantaneous safety gear tripped by overspeed governor or safety rope, the test shall be made with an empty car, at the rated speed;

b) for progressive safety gear, the test shall be made with an empty car, at the rated speed or lower.

When the test is made at a speed lower than the rated speed, the manufacturer shall provide curves to illustrate the behaviour of the type tested progressive safety gear under counterweight or balancing weight application when dynamically tested with the suspensions attached.

After the test, it shall be ascertained that no deterioration, which could adversely affect the normal use of the lift has occurred. If necessary, friction components may be replaced. Visual check is considered to be sufficient.

6.3.6 *Pawl Device* **(5.6.5)**

a) *Dynamic Test* — The test shall be made while the car is travelling at a normal speed downwards, with the load uniformly distributed; the contacts on the Pawl device and on the energy dissipation buffer (**5.6.5.7**), if any, being short-circuited to avoid closing of the down direction valves.

   The car shall be loaded with 125 percent of the rated load and shall be stopped by the pawl device at each landing.

   After the test, it shall be ascertained that no deterioration which could adversely affect the normal use of the lift has occurred. Visual check is considered to be sufficient;

b) Visual examination of the engagement of the pawl(s) with all supports, and of the running clearance measured horizontally between the pawl(s) and all supports during travel;

c) verification of the stroke of the buffers.

6.3.7 *Buffers* (**5.8.1, 5.8.2**)

a) for energy accumulation type buffers, the test shall be carried out in the following manner:

   1) the car with its rated load shall be placed on the buffer(s);

   2) the ropes shall be made slack or the pressure in the hydraulic system shall be reduced to the minimum by pressing the emergency manual lowering button;

   3) it shall be checked that the compression corresponds to the figures given in the technical compliance documentation (*see* **Annex B**).

   NOTE — It can be necessary to override the minimum pressure device or temporarily modify the setting of the minimum low pressure device.

b) for energy dissipation type buffers, the test shall be carried out in the following manner: the car with its rated load and the counterweight shall be brought into contact with the buffers at the rated speed or at the speed for which the stroke of the buffers has been calculated, in the case of the use of reduced stroke buffers with verification of the retardation (**5.8.2.2.2**).

After the test, it shall be ascertained that no deterioration, which could adversely affect the normal use of the lift has occurred. Visual check is considered to be sufficient.

6.3.8 *Rupture Valve* (**5.6.3**)

A system test shall be carried out, with the rated load uniformly distributed in the descending car at an overspeed (**5.6.3.1**) to operate the rupture valve. The correct adjustment of the tripping speed can be checked, for instance, by comparison with the manufacture's adjustment diagram (*see* **Annex B**).

For lifts with several interconnected rupture valves, check the simultaneous closing by measuring the inclination of the car floor (**5.6.3.4**).

6.3.9 *Restrictor/One-Way Restrictor* (**5.6.4**)

Check that the maximum speed, v_{max}, does not exceed v_d + 0.30 m/s:

a) either by measuring; or

b) by using **Formula (22)**.

$$v_{max} = v_t \sqrt{\frac{p}{p - p_t}} \quad \text{... (22)}$$

where

p is the full load pressure, in megapascals;

p_t is the pressure measured during a downward journey with rated load in the car, in megapascals;[a]

[a] If necessary, pressure losses and friction losses shall be taken into account.

Free Standard provided by BIS via BSB Edge Private Limited to Akshay Chaudhary - Chennai(akshay.chdary@gmail.com) 136.238.2.51 [for non-commercial use only].

v_{max} is the maximum downward speed in the case of a rupture in the hydraulic system, in metres per second;

v_t is the speed measured during a downward journey with rated load in the car, in metres per second.

6.3.10 *Pressure Test*

A pressure of 200 percent full load pressure is applied to the hydraulic system between the non-return valve and the jack included. The system is then observed for evidence of pressure drop and leakage during a period of 5 min (taking into account the possible effects of temperature change in the hydraulic fluid).

After this test, it shall be visually ascertained that the integrity of the hydraulic system is maintained:

This test should be carried out after the test of the devices against free fall (**5.6**), and include any hydraulic elements included in the uncontrolled movement protection means.

6.3.11 *Ascending Car Overspeed Protection Means* (**5.6.6**)

The test shall be made while the empty car is ascending at not less than the rated speed, using only this device for braking.

6.3.12 *Stopping of the Car at Landings and Levelling Accuracy* (**5.12.1.1.4**)

The stopping accuracy of the car shall be verified to be in compliance with **5.12.1.1.4**, at all landings, and in both directions for intermediate floors.

It shall be verified that the car maintains levelling accuracy as per **5.12.1.1.4** during loading and unloading conditions. This verification shall be made at the most unfavourable floor.

6.3.13 *Protection against Unintended Car Movement* (**5.6.7**)

The aim of the test before putting into service is to check detection and stopping elements.

Test requirements: only the stopping element of the means defined in **5.6.7** shall be used for the tests for stopping the lift. The test shall:

a) consist in verifying that the stopping element of the means is triggered as required by type examination;

b) be made by moving the empty car in the upward direction in the upper part of the well (for example, from one floor from top terminal) and a fully loaded car in the downward direction in the lower part of the well (for example, from one floor from bottom terminal) with a pre-set speed, for example, as defined during type testing, (inspection speed etc.).

The test, as defined by the type examination, shall confirm that the unintended movement distance will not exceed the value given in **5.6.7.5**.

If the means requires self-monitoring (**5.6.7.3**), its function shall be checked.

NOTE — If the stopping element of the means involves elements present at landing floors, it can be necessary to repeat the test for each concerned landing.

6.3.14 *Protection against Falling/Shearing* (*see* **5.3.9.3.4**)

With the car outside of the unlocking zone (*see* **5.3.8.1**) and the landing door held open with a gap of 100 mm, it shall be checked that, when released, the landing door closes and locks.

7 INFORMATION FOR USE

7.1 General

The documentation shall consist of an instruction manual and a logbook.

7.2 Instruction Manual

7.2.1 *General*

The manufacturer/installer shall provide an instruction manual.

7.2.2 *Normal Use*

The instruction manual shall give the necessary information about the normal use of the lift and rescue operation as described in IS 17900 (Part 6) and, in particular, about the following:

a) keeping the machine and pulley rooms doors locked;

b) safe loading and unloading;

c) the precautions to be taken in case of lifts with partially enclosed well [**5.2.5.2.3 e)**];

d) the events needing the intervention of a competent maintenance person;

e) the number of persons allowed on the car roof and in the pit for maintenance and inspection;

f) keeping the logbook updated;

g) the location and use of special tools, if any (*see* **7.2.3**);

h) the use of the emergency unlocking key, detailing the essential precautions to be taken in order to avoid accidents which could result from an unlocking which was not followed by effective relocking.

Free Standard provided by BIS via BSB Edge Private Limited to Akshay Chaudhary - Chennai(akshay.chdary@gmail.com) 136.238.2.51 [for non-commercial use only].

This key shall be available on the site of the lift installation and accessible only to authorized persons.

The emergency unlocking key shall have a label attached, drawing attention to the danger which can be involved in using this key and the need to make sure that the door is locked after it has been closed;

j) rescue operation: in particular, detailed instructions shall be given on the release of the brake, ascending car overspeed protection means, unintended car movement protection means, rupture valve and the safety gear, including the identification of special tools, if any.

7.2.3 *Maintenance*

The instruction manual shall be in accordance with IS 17900 (Part 6).

It shall inform about the identification and use of the special tools.

Accumulation type buffers made from synthetic materials shall be checked periodically on aging considering instructions from the manufacturer [*see* **5.5.1 c)** and **5.5.4 h)** of IS 17900 (Part 2)].

7.2.4 *Examinations and Tests*

The instruction manual shall inform about the following.

a) *Periodical Examinations* — When periodical examinations and tests on lifts are carried out after they are placed on the market, to verify that they are in good condition, these periodical examinations and tests should be carried out in accordance with **Annex C** and be recorded in the logbook.

b) any specific requirements.

7.3 Logbook

7.3.1 A logbook shall be provided, in which notes about repairs, examinations after modifications and accidents and periodic checks, including those specified by the manufacturer/installer, can be recorded.

7.3.2 The basic characteristics of the lift shall be recorded in the logbook. This register or file shall comprise:

a) a technical section giving:

1) the date the lift was put into service;

2) the basic characteristics of the lift;

3) the characteristics of the suspension means;

4) the characteristics of those parts for which verification of conformity is required (**Annex B**);

5) the plans of installation in the building;

6) electric schematic diagrams;

The electric schematic diagrams may be limited to the circuits for the overall understanding of the safety considerations and use symbols of IS 12032 series. Any graphical symbol not shown in IS 12032 shall be separately shown and described on the diagrams or supporting documents. The symbols and identification of components and devices shall be consistent throughout all documents and on the lift.

The abbreviations used with the symbols shall be explained by means of a nomenclature.

If the electrical schematic diagram has several alternatives, it shall be indicated which alternative is valid, for example, by listing of the applicable alternative solutions;

7) hydraulic circuit diagrams (using symbols from IS 7513 (Part 1)).

The circuit diagrams may be limited to the circuits for the overall understanding of the safety considerations. The abbreviations used with the symbols shall be explained by means of a nomenclature;

8) the full load pressure;

9) the characteristics or type of hydraulic fluid;

10) the characteristics of each incoming supply:

i) rated voltage, number of phases and frequency (if a.c.);

ii) full load current;

iii) short-circuit rating at the point of incoming supply terminals.

b) a section intended to keep duplicate dated copies of examination and inspection reports, with observations. This register or file shall be kept up-to-date in case of:

1) important modifications to the lift (**Annex C**);

2) replacement of ropes or important parts;

3) accidents.

This register or file should be available to those in charge of the maintenance, and to the person or organization responsible for the periodical examinations and tests.

8 This clause number has not been used.

Free Standard provided by BIS via BSB Edge Private Limited to Akshay Chaudhary - Chennai(akshay.chdary@gmail.com) 136.238.2.51 [for non-commercial use only].

ANNEX A

(*Normative*)

LIST OF THE ELECTRIC SAFETY DEVICES

(*Clause* 5.11.2.1.1)

Table A-1 List of the Electric Safety Devices

(*Clauses* 3.40 *and* 5.11.2.6)

Sl No.	Clause	Devices Checked	Minimum SIL
(1)	(2)	(3)	(4)
i)	**5.2.1.5.1** a)	Stopping device in the pit	3
ii)	**5.2.1.5.2** c)	Stopping device in the pulley room	3
iii)	**5.2.2.4**	Check of the stored position of pit ladder	1
iv)	**5.2.3.3**	Check of the closed position of access and emergency doors and inspection doors	2
v)	**5.2.5.3.1** c)	Check of the locking of car door	2
vi)	**5.2.6.4.3.1** b)	Check of the inactive position of the mechanical device	3
vii)	**5.2.6.4.3.3** c)	This sub clause number has not been used.	
viii)	**5.2.6.4.4.1** d)	Check of the opening of any door providing access to the pit	2
ix)	**5.2.6.4.4.1** e)	Check of the inactive position of the mechanical device	3
x)	**5.2.6.4.4.1** f)	Check of the active position of the mechanical device	3
xi)	**5.2.6.4.5.4** a)	Check of the retracted position of the working platform	3
xii)	**5.2.6.4.5.5** b)	Check of the retracted position of movable stops	3
xiii)	**5.2.6.4.5.5** c)	Check of the extended position of movable stops	3
xiv)	**5.3.9.1**	Check on the locked position of landing door locking device	3
xv)	**5.3.9.4.1**	Check of the closed position of landing doors	3
xvi)	**5.3.11.2**	Check of the closed position of the panels without locks	3
xvii)	**5.3.13.2**	Check of the closed position of car door	3
xviii)	**5.4.6.3.2**	This sub clause number has not been used.	
xix)	**5.4.8** b)	Stopping device on the car roof	3
xx)	**5.5.3** c) 2)	Check raising of car or counterweight	1
xxi)	**5.5.5.3** a)	This sub clause number has not been used.	
xxii)	**5.5.5.3** b)	Check for slack rope for positive drive and hydraulic lifts	2
xxiii)	**5.5.6.2** f)	Check of the tension in the compensation means	3
xxiv)	**5.5.6.1** c)	Check of the anti-rebound device	3
xxv)	**5.6.2.1.5**	Check of the inactive position of the car safety gear	1
xxvi)	**5.6.2.2.1.6** a)	Over speed detection	2
xxvii)	**5.6.2.2.1.6** b)	Check of the release of the over speed governor	3
xxviii)	**5.6.2.2.1.6** c)	Check on the tension in the over speed governor rope	3
xxix)	**5.6.2.2.3** e)	Check of the breakage or slackening of the safety rope	3
xxx)	**5.6.2.2.4.2** h)	Check of the retracted position of the tripping lever	2
xxxi)	**5.6.5.9**	Check of the retracted position of the pawl device	1
xxxii)	**5.6.5.10**	Check of the return to normal extended position of buffers where energy dissipation are used in conjunction with pawl device	3
xxxiii)	**5.6.6.5**	Check of the ascending car over speed protection means	2
xxxiv)	**5.6.7.7**.	Detection of unintended car movement with open doors	2
xxxv)	**5.6.7.8**	Check of the activation of the unintended car movement with open doors protection	1

Free Standard provided by BIS via BSB Edge Private Limited to Akshay Chaudhary - Chennai(akshay.chdary@gmail.com) 136.238.2.51 [for non-commercial use only].

Table A-1 (*Concluded*)

Sl No.	Clause	Devices Checked	Minimum SIL
(1)	(2)	(3)	(4)
xxxvi)	**5.8.2.2.4**	Check of the return to normal extended position of buffers	3
xxxvii)	**5.9.2.3.1** a) 3)	Check of the positions of the removable wheel	1
xxxviii)	**5.10.5.2**	Control of main switch by means of circuit breaker contactor	2
xxxix)	**5.12.1.3**	Check of the retardation in the case of reduced stroke buffers	3
xl)	**5.12.1.4** a)	Check on levelling, re-levelling and preliminary operations	2
xli)	**5.12.1.5.1.2** a)	Inspection operation switch	3
xlii)	**5.12.1.5.2.3** b)	Check of push buttons in conjunction with inspection operation	1
xliii)	**5.12.1.6.1**	Emergency electrical operation switch	3
xliv)	**5.12.1.8.2**	Bypass device for landing and car door contacts	3
xlv)	**5.12.1.11.1** d)	Stopping device with inspection operation	3
xlvi)	**5.12.1.11.1** e)	Stopping device at the lift machine	3
xlvii)	**5.12.1.11.1** f)	Stopping device at tests and emergency operation panel	3
xlviii)	**5.12.2.2.3**	Check of the tension in the device for transmission of the car position (final limit switches)	1
xlix)	**5.12.2.2.4**	Check of the tension in the device for transmission of the ram position (final limit switches)	1
l)	**5.12.2.3.1** b)	Final limit switches	1

NOTE — The SIL levels are only relevant for PESSRAL as described in **5.11.2.6**.

ANNEX B

(*Informative*)

(*Clauses* 6.1, 6.3.7, 6.3.8 *and* 7.3.2)

TECHNICAL COMPLIANCE DOCUMENTATION

The technical compliance documentation should include the following information, which can be necessary for conformity assessment procedures:

a) the name and address of the manufacturer/installer of the lift;

b) details of the place where the lift can be examined;

c) a general description of the lift (characteristics, load, speed, rise, stops, etc.);

d) design and manufacturing drawings and/or diagrams (mechanic/electric/hydraulic);

NOTE — Drawings or diagrams for understanding design and operation.

e) a copy of the type examination certificates/licenses, whichever is applicable, of the safety components used on the lift. *See* also IS 17900 (Part 2);

f) certificates and/or reports, where applicable, of:

1) ropes, CSBs or chains;

2) glass-panels;

3) door impact test;

4) door fire test.

g) results of any tests or calculations performed or subcontracted by the manufacturer, for example, traction, guide rail, hydraulic calculations;

h) a copy of the instructions manual for the lift:

1) plans and diagrams;

NOTE — Plans and diagrams for performing normal use, maintenance, repair, periodical inspections and rescue operations.

2) instructions for use of the lift;

j) maintenance instructions [*see* IS 17900 (Part 6)]:

1) emergency procedures;

2) manufacturers requirements for periodic inspections.

NOTE — Requirements do not include national/state regulations.

k) logbook;

NOTE — Logbook for notes about repairs and, where appropriate, periodic checks.

Free Standard provided by BIS via BSB Edge Private Limited to Akshay Chaudhary - Chennai(akshay.chdary@gmail.com) 136.238.2.51 [for non-commercial use only].

ANNEX C

(*Informative*)

(*Clauses* 1.3, 7.2.4 *and* 7.3.2)

PERIODIC EXAMINATIONS AND TESTS, EXAMINATIONS AND TESTS AFTER AN IMPORTANT MODIFICATION OR AFTER AN ACCIDENT

C-1 PERIODIC EXAMINATIONS AND TESTS

Periodic examinations and tests shall not be more stringent than those required before the lift was put into service for the first time.

These periodic tests should not, through their repetition, cause excessive wear or impose stresses likely to reduce the safety of the lift. This is the case, in particular, of the test on components such as the safety gear and the buffers. If tests on these components are made, they shall be carried out with empty car and at a reduced speed.

The person appointed to make the periodic test should assure himself that these components (which do not operate in normal operation) are still in an operating condition.

A duplicate copy of the report should be attached to the register or file in the part covered by **7.3.2 b)**.

C-2 EXAMINATIONS AND TESTS AFTER AN IMPORTANT MODIFICATION OR AFTER AN ACCIDENT

The important modifications and accidents shall be recorded in the technical part of the register or file covered in **7.3.2 b)**.

In particular, the following are considered as important modifications:

a) change of the:
   1) rated speed;
   2) rated load;
   3) mass of the car;
   4) travel.

b) change or replacement of the:
   1) type of locking devices (the replacement of a locking device by a device of the same type is not considered as an important modification) (**5.3.9.1** and **5.3.9.2**);
   2) control system;
   3) guide rails or the type of guide rails (**5.7**);
   4) type of door (or the addition of one or more landing or car doors) (**5.3**);
   5) machine or the traction sheave (**5.9.2**);
   6) overspeed governor (**5.6.2.2.1**);
   7) ascending car overspeed protection means (**5.6.6**);
   8) buffers (**5.8**);
   9) safety gear (**5.6.2.1**);
   10) unintended car movement protection (**5.6.7**);
   11) pawl device (**5.6.5**);
   12) jack (**5.9.3.2**);
   13) pressure relief valve (**5.9.3.5.3**);
   14) rupture valve (**5.6.3**);
   15) restrictor/one-way restrictor (**5.6.4**);
   16) mechanical device for preventing movement of the car (**5.2.6.4.3.1**);
   17) mechanical device for stopping the car (**5.2.6.4.4.1**);
   18) platform (**5.2.6.4.5**);
   19) mechanical device for blocking the car or movable stops (**5.2.6.4.5.2**);
   20) devices for emergency and tests operations (**5.2.6.6**).

Free Standard provided by BIS via BSB Edge Private Limited to Akshay Chaudhary - Chennai(akshay.chdary@gmail.com) 136.238.2.51 [for non-commercial use only].

ANNEX D

(*Informative*)

(*Clause* 5.2.2.1)

MACHINERY SPACES — ACCESS

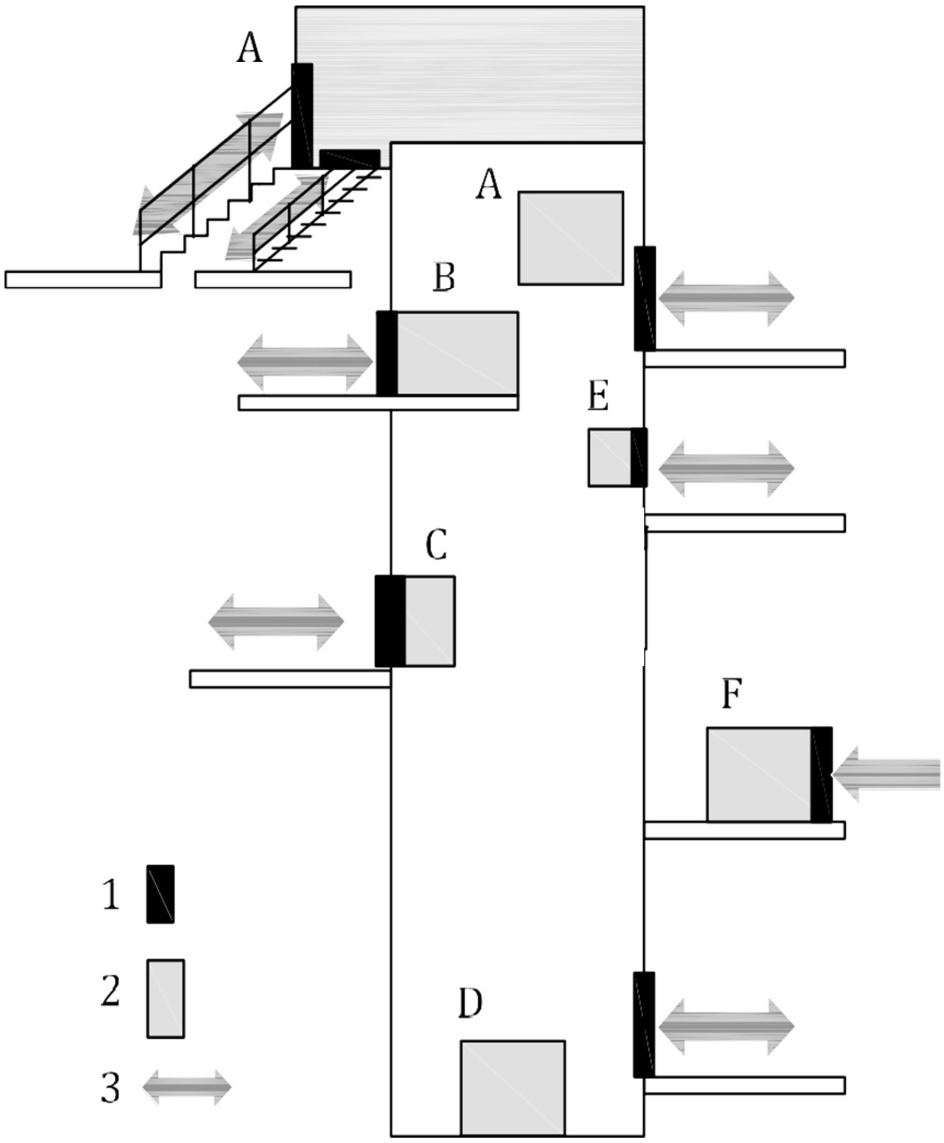

Key

1	doors and trap doors (**5.2.3**)	A	(**5.2.6.4.3**)
2	machinery spaces (**5.2.6**)	B	(**5.2.6.4.5**)
3	access (**5.2.2**)	C	(**5.2.6.4.6**)
		D	(**5.2.6.4.4**)
		E	(**5.2.6.6**)
		F	(**5.2.6.5**)

FIG. D-1 MACHINERY SPACES - ACCESS (5.2.2)

Free Standard provided by BIS via BSB Edge Private Limited to Akshay Chaudhary - Chennai(akshay.chdary@gmail.com) 136.238.2.51 [for non-commercial use only].

ANNEX E

(*Informative*)

(*Clause* 5.2.1.8.1)

BUILDING INTERFACES

E-1 GENERAL PROVISIONS

The building structure should be constructed to withstand loads and forces to which it is subjected by the lift equipment. If not specified differently in this document for particular applications, these loads and forces are:

a) values resulting from the static masses;

b) values resulting from moving masses and their emergency operation. The dynamic effect is represented by a factor of 2.

E-2 SUPPORT OF GUIDE RAILS

It is important that the guide rails of the lift be supported in such a way that the effects of movement of the building structure to which they are connected are minimized.

When considering buildings made of concrete, blockwork or bricks, it can be assumed that the guide rail brackets which support the guides are not subjected to displacement caused by movement of the well walls (other than compression, *see* **5.7**).

However, where the guide brackets are connected to the building fabric by steel beams, or by connection to timber frames, there can be deflection of this structure due to the load imposed by the car through the guides and guide brackets. Additionally, there can be movement of the lift's supporting structure due to external forces such a wind loading, snow loading, etc.

Any deflection of these beams or frames should be taken into account during the calculations required in **5.7**.

The total permissible deflection of the guide rails for the safe operation of the safety gear, etc., shall include any displacement of the guide rail due to deflection of the building fabric, and the deflection of the guide itself due to the load imparted on it by the car.

It is therefore important that the persons responsible for the design and fabrication of these supporting structures communicate with the lift provider in order to ensure that they are suitable under all load conditions.

E-3 VENTILATION OF CAR, WELL AND MACHINE ROOMS

E-3.1 General

See **0.4.2**, **0.4.17** and **0.4.18**.

The requirement to suitably ventilate the well and machine rooms is often contained within local building regulations, either specifically or as a general requirement, as would be given for any building space where machinery is installed or people are accommodated (for leisure, work, etc.). As such, this document cannot provide exact guidance on the specific requirements to ventilate such areas when the well and machine rooms are part of one larger and often complex total build environment.

Doing so would conflict with these requirements.

However, some general guidance can be given.

E-3.2 Ventilation of the Well and Car

The safety and comfort of persons in the lift, working in the well or who can become entrapped in the car or well should the car become stalled between floors, depends on many factors:

a) the ambient temperature of the well as part of the building or even totally standalone;

b) the exposure to direct sunlight;

c) volatile organic components, CO_2, air quality;

d) fresh air access in the well;

e) the size of the well, both in cross-sectional area and height;

f) the number, size, gaps around, and location of, landing doors;

g) the expected heat output from installed equipment;

h) the fire-fighting and smoke evacuation strategy and related BMS (building management system);

j) the humidity, dust and fumes;

k) the air flow (heat/cooling) and energy-saving building technology applied;

m) the air tightness of the well and the entire building.

The car should be provided with sufficient ventilation aperture to ensure an adequate flow of air for the maximum number of permitted occupants (*see* **5.4.9**).

During normal operation and maintenance of the lift, the gaps around the landing doors, the opening/closing of these doors and the pump effect of the lift travelling within the well, can generally be sufficient to provide the air exchange necessary for human needs between the staircases, lobbies and the well.

However, for technical needs, and in some cases for human needs, the air tightness of the well and the entire

Free Standard provided by BIS via BSB Edge Private Limited to Akshay Chaudhary - Chennai(akshay.chdary@gmail.com) 136.238.2.51 [for non-commercial use only].

building, the environmental conditions, particularly higher ambient temperature, radiation, humidity, air quality, result in the need for a permanent or on-demand ventilation aperture(s) and/or (combined with) forced ventilation and/or fresh air entry. This can also be necessary when transporting certain items such as motorized vehicles where exhaust fumes can be hazardous. This can only be decided on a case-by-case basis.

Furthermore, in the event of a prolonged stoppage (considering normal and accidental conditions) of the car, further sufficient ventilation should be provided.

In particular, attention should be given to those buildings (new and in case of refurbishing) in which energy-efficient design and technology is present.

Wells are not intended to be used as a means to ventilate other areas of the building.

In some cases, this can be an extremely dangerous practice, such as industrial environments or underground car parks, where the drawing of dangerous gasses through the well can cause additional risk to persons travelling in the car. Under these considerations, the stale air from other areas of the building should not be used to ventilate the well.

Where the well forms part of a fire-fighting shaft, particular care needs to be taken.

In these cases, advice should be obtained by those who specialize in such equipment, or from local building and fire regulations.

In order to allow the person responsible for the work on the building or construction to determine if/what ventilation needs to be provided related to the total lift installation as part of the building, the installer of the lift should provide the necessary information to allow suitable calculations and appropriate building design to be made. In other words, they should keep each other informed of the facts necessary for the proper operation and safe use and maintenance of the lift within the building, and take the appropriate steps to ensure it.

E-3.3 Ventilation of Machine Rooms

The ventilation of the machine rooms is normally carried out to provide a suitable working environment for the engineer and the equipment installed into such spaces.

For this reason, the ambient temperature of machine rooms should be kept as given in the assumptions. *See* **0.4.17**. Additional care should be taken with regard to humidity and air quality to avoid technical problems, for example, condensation.

Failure to maintain these temperatures can result in the lift automatically removing itself from service until the temperature returns to its intended levels.

In order to allow the person responsible for the work on the building or construction to determine if/what ventilation needs to be provided in these machine rooms as part of the building, the installer of the lift should provide the necessary information to allow suitable calculations and appropriate building design to be made. In other words, they should keep each other informed of the facts necessary for the proper operation, safe use and maintenance of the lift, and take the appropriate steps to ensure it.

ANNEX F

(*Normative*)

(*Clause* 5.2.2.4)

PIT ACCESS LADDER

F-1 TYPES OF PIT ACCESS LADDER

The following types of pit access ladder may be used for access and egress to the pit of the lift (*see* **Fig. F-1**):

a) a fixed ladder (Type 1), which stands upright in one position for both use and storage purposes;

b) a retractable ladder (Type 2a), which stands upright in two positions, one for use, other for storage. The use position is obtained when a person is placing their weight on the rung;

c) a retractable ladder (Type 2b), which stands upright for storage and is manually put in position of use by horizontal sliding of its bottom part;

d) a movable ladder (Type 3a), which stands upright for storage and is manually put in an inclined position of use;

Free Standard provided by BIS via BSB Edge Private Limited to Akshay Chaudhary - Chennai(akshay.chdary@gmail.com) 136.238.2.51 [for non-commercial use only].

e) a movable ladder (Type 3b), which lays down on the pit floor for storage and is manually put in an inclined position of use; or

f) a foldable ladder (Type 4), which is stored in the pit and then positioned and hooked onto the landing door sill.

F-2 GENERAL PROVISIONS

F-2.1 According to the type of pit ladder chosen when designing a lift installation (*see* **F-1**), the ladder shall be permanently stored in the lift pit so that it cannot be removed from the well or used for other purposes.

F-2.2 The ladder shall be:

a) able to withstand the weight of one person counting for 1 500 N;

b) made of aluminium or steel. In the case of steel, an anti-corrosion protection shall be applied. Wood ladders shall not be used.

F-2.3 The length of the ladder shall be such that, in position of use, the length of the uprights, or other suitable handhold, extends to a minimum height of 1.10 m measured vertically above the landing sill.

F-3 LADDER UPRIGHTS AND RUNGS

F-3.1 Ladder Uprights

The cross-section of the ladder uprights shall be so that:

a) for easy and safe hand grasping, the width does not exceed 35 mm, and depth 100 mm;

b) shall have not only adequate strength but rigidity as well. All ladders shall be tested for 1500 N load test. The rung and ladder shall not show any distress or noticeable bending [*see* IS 3696 (Part 2)].

F-3.2 Ladder Rungs

The ladder rungs shall fulfil the following requirements:

a) the clear width of the ladder rungs shall be minimum 280 mm;

b) the rungs shall be equally spaced, between 250 mm and 300 mm;

c) the cross section of the ladder rungs shall be either circular or polygonal (square or more than 4 sides), with a diameter or a flat tread of minimum 25 mm and maximum 35 mm;

d) the surface conditions of the rungs shall be non-slippery, that is, by means of profiled surface or special durable anti-slippery coating.

F-4 SPECIFIC PROVISIONS FOR NON-FIXED TYPE LADDERS

For movable and foldable ladders (types 3 and 4), the following apply:

a) the maximum weight of the ladder shall not exceed 15 kg in order to allow easy and safe handling from the landing sill;

NOTE — National/State regulations can request a maximum weight less than 15 kg for manual handling.

b) safe use of the ladder in position of use shall be ensured by means of a device securing the ladder to the landing sill, the bottom of the pit, or the wall of the well;

c) the ladder shall be prevented from tipping over when a person is standing or grasping the upper part of the ladder (above landing sill level) by means of appropriate devices at bottom end of the ladder uprights;

d) for retractable ladders (type 2a) and foldable ladders (type 4), provisions shall be fitted so that, when putting the ladder from position of use back to storage position, the risk of shearing and/or crushing hands or feet is prevented when retracting or folding back the parts of the ladder.

F-5 LOCATION OF THE LADDER IN THE PIT

The location of the ladder in the pit shall be such that, in position of use, the following are fulfilled:

a) there shall be a clear distance of 200 mm minimum between the back of any rung and the pit wall, in the case of vertical ladder;

b) the distance between the edge of the landing entrance and the ladder in its stored position shall not be more than 800 mm;

c) the distance between the edge of the landing entrance and the middle of the rungs of the ladder in the working position shall be 600 mm maximum for easy reach;

d) the height of the first rung of the ladder shall be positioned as close as possible at the same level as the landing sill.

Free Standard provided by BIS via BSB Edge Private Limited to Akshay Chaudhary - Chennai(akshay.chdary@gmail.com) 136.238.2.51 [for non-commercial use only].

Dimensions in millimetres

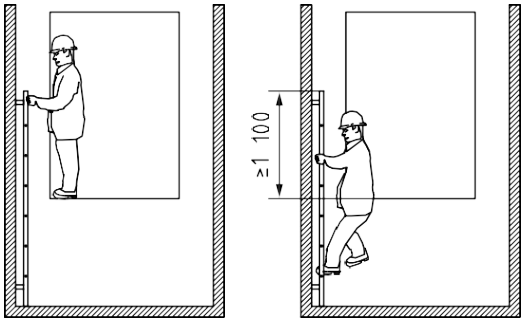

a) Type 1 — Fixed pit ladder

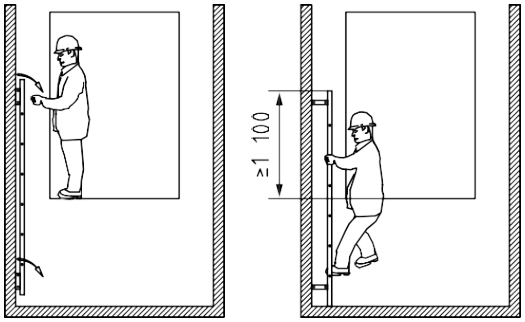

b) Type 2a — Retractable pit ladder

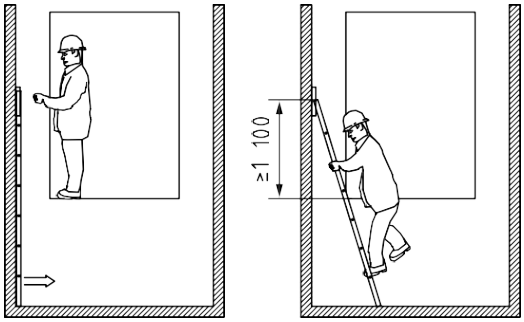

c) Type 2b — Retractable pit ladder

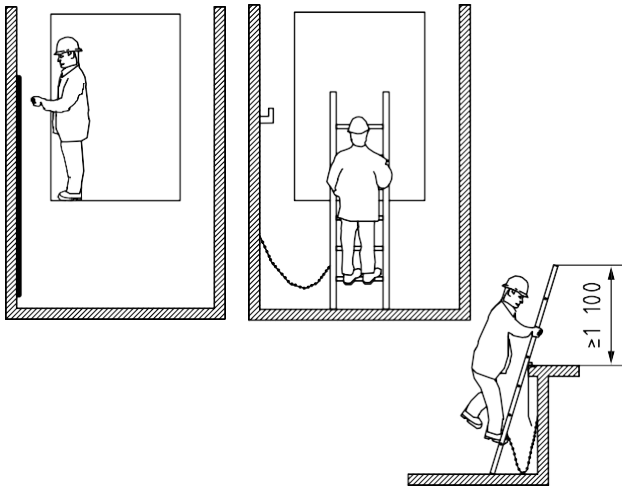

d) Type 3a — Movable pit ladder

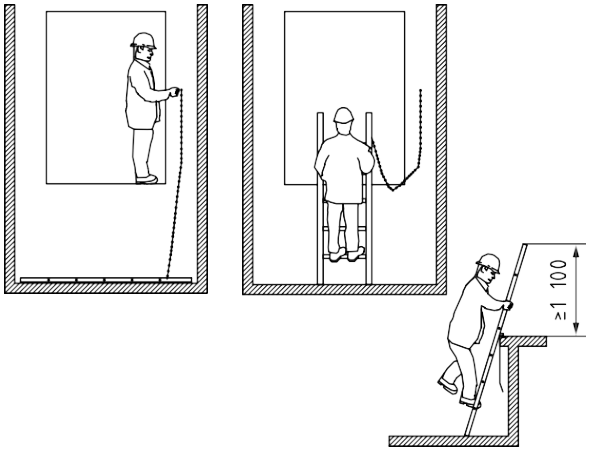

e) Type 3b — Movable pit ladder

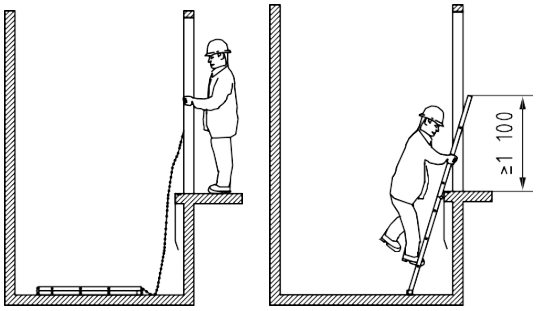

f) Type 4 — Foldable pit ladder

FIG. F-1 TYPES OF PIT ACCESS LADDER

Free Standard provided by BIS via BSB Edge Private Limited to Akshay Chaudhary - Chennai(akshay.chdary@gmail.com) 136.238.2.51 [for non-commercial use only].

ANNEX G

(*Informative*)

RELATIONSHIP BETWEEN THIS STANDARD AND ISO 8100-20

The requirements of this standard are not intended to prevent the use of systems, methods, devices or components of equivalent or superior safety, strength, effectiveness, durability, etc. to those prescribed by this standard, provided that the equivalency of the system, method, device, or component can be verified.

ISO 8100-20 and national/state regulations can be consulted for further information.

ANNEX H

(*Normative*)

(*Clauses* 5.5.1.1, 5.5.1.2 *and* 5.5.1.3)

ELASTOMERIC COATED STEEL BELTS FOR LIFTS

H-1 REQUIREMENTS

The general requirements for elastomeric coated steel chorded belts for suspension and compensation applications on passenger and freight lifts for various constructions is written in SI units.

H-2 TERMS

H-2.1 Description of Terms

H-2.1.1 *Steel Chord*

An assembly of steel strands each comprising several steel wires. The strands are helically laid around a central core strand.

H-2.1.2 *Coated Steel Belt (CSB)*

A belt comprising several steel chords arranged in parallel, and molded within an elastomeric casing.

H-2.2 Belt Grade

A level of requirement of the breaking force of the elastomeric coated steel belt, which is designated by a number.

H-3 DIMENSIONAL CHARACTERISTICS

H-3.1 For the Steel Chords

H-3.1.1 *Chord Diameter*

The diameter of a circle that circumscribes the cross section of a chord. This diameter is used for evaluating diameter ratios.

H-3.1.2 *Chord Lay Length*

That distance measured parallel to the longitudinal belt axis, in which the outer strands of the chord make one complete turn about the axis of the chord.

H-3.1.3 *Number of Strands in a Chord*

H-3.1.4 *Number of Steel Wires in a Strand*

H-3.1.5 *For the Molded CSB*

H-3.1.5.1 *Number of steel chords in a CSB*

H-3.1.5.2 *Chord pitch*

The spacing between adjacent chord center lines in the CSB.

H-3.1.5.3 *CSB width*

The larger dimension of the cross-section of the molded belt.

H-3.1.5.4 *CSB thickness*

The lesser dimension of the cross-section of the molded belt.

H-3.2 Mechanical Properties

H-3.2.1 *Steel Chord Tensile Strength*

The ratio between the minimum force obtained in a tensile test to the sum of the cross sectional areas of the wires in the chord.

H-3.2.2 *CSB, Minimum Breaking Force*

Specified value which the actual (measured) breaking force must meet or exceed in a prescribed tensile test.

Free Standard provided by BIS via BSB Edge Private Limited to Akshay Chaudhary - Chennai(akshay.chdary@gmail.com) 136.238.2.51 [for non-commercial use only].

H-3.2.3 *CSB Stretch (Extension)*

H-3.2.3.1 *Constructional stretch*

Amount of extension which is attributed to the initial bedding down of the wires within strands and the strands within the chords due to belt loading.

H-3.2.3.2 *Elastic stretch*

Amount of recoverable extension which follows Hooke's law, within certain limits due to application of load.

H-3.2.3.3 *Permanent stretch*

Non-elastic, non-recoverable extension.

H-4 MATERIAL

H-4.1 Steel wire used in chord construction may be carbon or alloy steel manufactured to meet the tensile strength properties and durability requirements specified by the CSB manufacturer, or user.

H-4.2 Steel wires or chords may be plated with corrosion reducing materials as required by the CSB manufacturer or user.

H-4.3 Elastomeric casing material may be polyurethane or other suitable material which meets the durability, flexibility and traction requirements specified by the CSB manufacturer or user.

H-5 CSB PROPERTIES AND TOLERANCES

H-5.1 Classification

CSB shall be classified by the width and thickness, number of chords, chord diameter, and casing material.

H-5.2 Chord Core

Chords should normally be constructed with a steel core unless specified otherwise. Other cores should be the subject of agreement between the supplier and the purchaser.

H-5.3 CSB Grade

Belt grade shall be based on the minimum breaking load expected in a tensile test.

H-5.4 Chord Lay

The chord lay shall be specified between the purchaser and the manufacturer.

H-5.5 CSB Mass

The belt mass shall be specified in kg/m by the manufacturer.

H-5.6 Belt Length

The actual length of belt supplied expressed in meters shall be specified by the manufacturers subject to tolerances agreed upon by the manufacturer and the purchaser.

H-5.7 Dimensional tolerance of the CSB shall be specified between the purchaser and the manufacturer.

H-6 TESTING AND COMPLIANCE

H-6.1 General

Coated steel belts manufactured in accordance with this standard, where applicable, shall be capable of meeting all the appropriate requirements as specified in **H-5**. The manufacturer shall be able to demonstrate compliance with this standard by either:

a) Testing each production length in accordance with **H-5**.
b) Where the rope manufacturer operates a quality assurance system complying with IS/ISO 9002 and independently verified by an approved body, sampling tests may be undertaken to verify compliance with requirements. The sampling programme shall meet the following minimum requirements:
   1) For each size and grade of a given CSB construction the manufacturer shall be able to present evidence from testing of at least three production lengths representing the current design. The purpose of these tests is to prove the design, materials and methods manufacture.
   2) Future production lengths shall be deemed to comply when:
      i) Manufacturer has successfully completed the tests in **H-1**;
      ii) Periodic breaking force tests are successfully completed from a sample of production lengths in accordance with the following:

For classes, grades and breaking forces as specified in the appropriate part of this specification, a sample for breaking force testing shall be taken from a minimum of every twentieth production length.

H-7 LIFT CYCLE

H-7.1 Replacement Due to Damage

The CSB shall be replaced when load carrying chords are damaged by an exterior source. Damage to the elastomeric molded casing is not a requirement for replacement, as long as load carrying strands have not been severed.

Free Standard provided by BIS via BSB Edge Private Limited to Akshay Chaudhary - Chennai(akshay.chdary@gmail.com) 136.238.2.51 [for non-commercial use only].

H-7.2 Replacement Due to Wear

Replacement due to wear shall be considered in one of two categories: normal wear of the CSB elastomeric casings and fatigue limit of the load carrying strands. If any one belt is replaced due to wear, the complete set of similarly utilized belts on that elevator shall be replaced.

H-7.2.1 *Elastomeric Molded Casing Wear*

The CSB shall be replaced if the elastomeric casing, through wear or damage, results in any single strand of any chord being exposed to wear.

H-7.2.2 *Fatigue Life Limit*

The CSB shall be replaced if the fatigue limit is reached.

The fatigue life limit shall be established by one of the following methods:

H-7.2.2.1 The specification of a cycles of use based criterion for retirement of the CSB's specific to the application, and based upon test data.

H-7.2.2.2 The specification of a time-period of use based criterion for retirement of the CSB's. Such a time period shall be based upon cycles of operation and load conditions specific to the application and based upon test data.

H-7.2.2.3 The criteria for retirement of the CSB shall be based upon a monitoring measurement or inspection method, which is capable of determining the condition of the steel chords. This method may be continuous or periodically applied.

H-7.2.2.4 A combined method using cycle-based (*see* **H-7.2.2.1**) or time-based (*see* **H-7.2.2.2**) retirement criteria combined with a monitoring, measurement, and inspection method (*see* **H-7.2.2.3**) shall be permitted. The criteria shall be based upon test data.

H-7.2.2.5 The lift manufacturer shall establish the fatigue limit (in terms of cycles, time, monitoring, measurement), to ensure that the residual breaking load (RBL) of the CSB is not less than 60 percent of the minimum breaking load (MBL).

H-7.2.2.6 The method of fatigue limit determination shall be indicated on a belt identification tag, on the belt itself, or other visible place in close proximity to the terminations.

H-7.2.2.7 When a continuous operating fatigue monitoring system is installed, a self-test or automatic diagnostic indication shall be provided as part of the fatigue monitoring system. Should the system become inoperative, the lift shall not be permitted to re-start after a normal stop at the designated landing.

H-7.3 Visual Check and Replacement Criteria

CSB's shall be inspected visually. If any of the following defects are observed in visual inspection, all the CSB's shall be replaced:

a) Visual damage such as a kink in CSB, exposed cords, excessive elastomeric coating wear, etc;
b) Steel cords, strands or wires breaking through its elastomeric coating;
c) Piercing of CSB by foreign object;
d) Damaged CSB edge where outermost cord is visible.

Free Standard provided by BIS via BSB Edge Private Limited to Akshay Chaudhary - Chennai(akshay.chdary@gmail.com) 136.238.2.51 [for non-commercial use only].

ANNEX J

(*Foreword*)

COMMITTEE COMPOSITION

Lifts, Escalators and Moving Walks Sectional Committee, ETD 25

Organization(s)	*Representative(s)*
Central Public Works Department (CPWD)	Shri C. K. Varma (***Chairman***)
Airport Authority of India, New Delhi	Shri O. P. Chugh Shri Thomas Mathew T. (*Alternate*)
Central Electricity Authority, New Delhi	Shri Ashok Kumar Rajput
Central Public Works Department (CPWD), New Delhi	Shri Vimal Kumar Shri Rajiv Gupta (*Alternate*)
Delhi, Land and Finance Limited, Delhi	Shri Virender Kumar Sharma
Department of Delhi Fire Services, Govt of NCT of Delhi	Shri A. K. Sharma Dr G. C. Misra (*Alternate*)
Government of Assam, Chief Electrical Inspector, Guwahati	Shri Kajal Kumar Singha
Government of Tamil Nadu, Chief Electrical Inspectorate, Chennai	Shri G. Joseph Arockiadoss Shri P. Palani B.E. (*Alternate*)
Chief Electrical Inspectorate, Maharashtra	Shri Dinesh Khonde Shri Abhijeet L. Kasture (*Alternate*)
Chief Electrical Inspectorate, Energy and Petrochemical Department, Government of Gujarat	Shri Haiderali H. Khoja Shri Ashwin B. Chaudhary (*Alternate* I) Shri G. K. Prajapati (*Alternate* II)
Government of Karnataka, Chief Electrical Inspectorate, Bengaluru	Shri D. H. Basavaraju Shri Mohammad Javed Rabbani (*Alternate*)
Office of Chief Electrical Inspector, Department of Power and Non-Conventional Energy Sources, Government of West Bengal, Kolkata	Shri K. K. Dhara
Electrical Inspectorate, Labour Deptt, Govt of NCT of Delhi	Shri Mukesh Kumar Sharma Shri Jogender Singh (*Alternate*)
Delhi Metro Rail Corporation Limited	Shri Manuj Singhal Shri Kamal Ram Meena (*Alternate* I) Shri Sumit Kumar Sharma (*Alternate* II)
Electrical Contractors Association of Maharashtra, Pune	Shri Anil Gachke
Elevator and Escalator Component Manufacturers' Association of India, Chennai	Shri Suraj Thodimarath Shri Vikas Patil (*Alternate*)
Maharashtra Industrial Development Corporation (MIDC) Fire Service	Shri Santosh S. Warick Shri Milind V. Ogale (*Alternate*)
Fujitec India Pvt Ltd, Tamil Nadu	Shri S. P. Rao Shri R. Rajesh (*Alternate* I) Shri S. S. Balakrishnan (*Alternate* II)
Indian Electrical and Electronics Manufacturers Association, New Delhi	Ms Uttam Kumar

Free Standard provided by BIS via BSB Edge Private Limited to Akshay Chaudhary - Chennai(akshay.chdary@gmail.com) 136.238.2.51 [for non-commercial use only].

Organization(s)	*Representative(s)*
Johnson Lifts Pvt Limited, Chennai	Shri T. Subramanian Shri V. Karthikeyan (*Alternate* I) Shri Sachin More (*Alternate* II)
Kolkata Metro, Kolkata	Shri D. C. Ray
Kone Elevator India Private Limited, Chennai	Shri Balaji K. Shri U. Viswanathan (*Alternate* I) Shri R. Mani (*Alternate* II)
Lerch Bates Private Limited, Mumbai	Shri A. V. Rao
National Safety Council, Navi Mumbai	Shri Sudhir Patil
Otis Elevator Company (India) Limited, Mumbai	Shri Abhijit Dandekar Shri Shrihari Vispute (*Alternate* I) Shri Madhurendra Singh (*Alternate* II)
Research Designs and Standards Organization (RDSO), Lucknow	Shrimati Jyoti Bhaskar Shri Jitender Kumar (*Alternate*)
Schindler India Pvt Ltd, Mumbai	Shri Nimish Deshpande Shri Rajagopalan Renganathan (*Alternate* I) Shri Nitin Kadam (*Alternate* II)
Shapoorji Pallonji And Company Private Limited, Mumbai	Shri Shoeb Ansari
Tak Consulting Private Limited, Mumbai	Shri Tak Mathews Shri William Rebello (*Alternate*)
The Indian Institute of Architects, Mumbai	Shri Vinay M. Parelkar Shri Paresh Kapadia (*Alternate*)
TK Elevator India Pvt Ltd, Mumbai	Shri Vishnu Parashar Shri Deepak Balani (*Alternate*)
Expert in Personal Capacity	Shri P. M. Tipnis
BIS Directorate General	Shrimati Priti Bhatnagar, Scientist F/ Senior Director and Head (ETD) [Representing Director General (*Ex-officio*)]

Member Secretary

Shrimati Meghna Mudgal
Scientist C/Deputy Director (ETD), BIS

Free Standard provided by BIS via BSB Edge Private Limited to Akshay Chaudhary - Chennai(akshay.chdary@gmail.com) 136.238.2.51 [for non-commercial use only].

(*Continued from second cover*)

c) Reference to Chains and Sprockets removed throughout the document and reference to coated steel belts (CSBs) has been included in suspension. Safety factor for CSB has been added.

d) Addition of requirements of warning sign/notices as per *Electricity Act*, 2003 and National Building Code, 2016 for ensuring safety of persons and equipment.

e) Reference has been made to National Building Code, 2016 for civil details related to well enclosure, requirements of landing doors under fire conditions.

f) Recommended to provide double slab for the lift pit.

g) Modification of requirement for partition in 'well with more than one lift'.

h) Deletion of requirement for inspection door in car wall and provision of moving car from inside car using inspection panel.

j) Deletion of requirement for hinged car doors as hinged car doors are not used in India.

k) Additional requirement on sliding landing doors with multiple panels.

m) Requirement for minimum clear width of entrance added.

n) Addition of India specific requirement for Automatic Rescue device and Emergency Alarm Device and Intercom System.

p) Deletion of requirement of emergency trap doors in car roof or emergency door in case of adjacent cars.

q) Enhancement of requirements for counterweight or balancing weights in case of filler weights.

r) Enhancement of the number of the suspension means for both electric (traction and positive drives) and hydraulic lifts.

s) Addition of requirement of "Terminal Slow down and Normal Stopping Limit switches".

t) Addition of "Fire Protection Requirements of Lifts in High Rise Buildings".

u) Addition of ladder mechanical strength requirements.

The composition of the Committee, responsible for the formulation of this standard is given at Annex J.

For the purpose of deciding whether a particular requirement of this standard is complied with the final value, observed or calculated, expressing the result of a test or analysis shall be rounded off in accordance with IS 2 : 2022 'Rules for rounding off numerical values (*second revision*)'. The number of significant places retained in the rounded off value should be the same as that of the specified value in this standard.

Free Standard provided by BIS via BSB Edge Private Limited to Akshay Chaudhary - Chennai(akshay.chdary@gmail.com) 136.238.2.51 [for non-commercial use only].

Bureau of Indian Standards

BIS is a statutory institution established under the *Bureau of Indian Standards Act*, 2016 to promote harmonious development of the activities of standardization, marking and quality certification of goods and attending to connected matters in the country.

Copyright

BIS has the copyright of all its publications. No part of these publications may be reproduced in any form without the prior permission in writing of BIS. This does not preclude the free use, in the course of implementing the standard, of necessary details, such as symbols and sizes, type or grade designations. Enquiries relating to copyright be addressed to the Head (Publication & Sales), BIS.

Review of Indian Standards

Amendments are issued to standards as the need arises on the basis of comments. Standards are also reviewed periodically; a standard along with amendments is reaffirmed when such review indicates that no changes are needed; if the review indicates that changes are needed, it is taken up for revision. Users of Indian Standards should ascertain that they are in possession of the latest amendments or edition by referring to the website- www.bis.gov.in or www.standardsbis.in.

This Indian Standard has been developed from Doc No.: ETD 25 (16075).

Amendments Issued Since Publication

Amend No.	Date of Issue	Text Affected

BUREAU OF INDIAN STANDARDS

Headquarters:

Manak Bhavan, 9 Bahadur Shah Zafar Marg, New Delhi 110002
Telephones: 2323 0131, 2323 3375, 2323 9402 *Website*: www.bis.gov.in

Regional Offices:		*Telephones*
Central	: 601/A, Konnectus Tower-1, 6th Floor, DMRC Building, Bhavbhuti Marg, New Delhi 110002	2323 7617
Eastern	: 8th Floor, Plot No 7/7 & 7/8, CP Block, Sector V, Salt Lake, Kolkata, West Bengal 700091	2367 0012 2320 9474
Northern	: Plot No. 4-A, Sector 27-B, Madhya Marg Chandigarh 160019	265 9930
Southern	: C.I.T. Campus, IV Cross Road, Taramani, Chennai 600113	2254 1442 2254 1216
Western	: Plot No. E-9, Road No.-8, MIDC, Andheri (East), Mumbai 400093	2821 8093

Branches : AHMEDABAD. BENGALURU. BHOPAL. BHUBANESHWAR. CHANDIGARH. CHENNAI. COIMBATORE. DEHRADUN. DELHI. FARIDABAD. GHAZIABAD. GUWAHATI. HIMACHAL PRADESH. HUBLI. HYDERABAD. JAIPUR. JAMMU & KASHMIR. JAMSHEDPUR. KOCHI. KOLKATA. LUCKNOW. MADURAI. MUMBAI. NAGPUR. NOIDA. PANIPAT. PATNA. PUNE. RAIPUR. RAJKOT. SURAT. VISAKHAPATNAM.

Published by BIS, New Delhi