Analog Electronics (EE-204), 3-0-2

Gaurav Kaushal

kaushalg@iiitm.ac.in

02. 01. 2026

IC Design Lab, Dept. of EEE

ABV-IIITM Gwalior

विश्वजीवनामृतं ज्ञानम्

Learning Objectives

- To acquaint the students with the fundamental principles of operation and design of analog circuit building blocks using MOSFETs and their use in analog circuit design.
- In addition, to get familiar with op-amps applications.

Topics which are already covered in FEE - Construction and application of Bipolar Junction Transistors; Common-Base Configuration, Common-Emitter Configuration, Common Collector Configuration; Rectifiers, Basics of MOSFET

Topics to be covered -

- Overview of MOSFET and amplifiers.
- Common Source (CS) amplifiers, CS amplifier with source degeneration common gate amplifers, common drain amplifiers, Biasing.
- Current mirrors, cascode current mirrors.
- Feedback and OPAMP Basics and Applications

Software/Hardware to be provided

Software

- Circuit Wizard (can make any circuit by using resistor, capacitor, diode, BJT, MOSFET, etc.., can see the waveform of output voltage)
- Cadence - Can we used to visualize the frequency response of an amplifier

(IC Design Lab, C-115)

Hardware

- MOSFET ICs, resistors, capacitors, power supply, oscilloscope, function generators

Reference Books

- Fundamentals of Microelectronics by Behzad Razavi, Wiley India.
- Microelectronics Circuits by S. Smith, Oxford.
- Electronic Devices and Circuit Theory by Boylestad R. L., Pearson Education.
- Integrated Electronics by Millman, J. and Halkias, C.C., Tata McGraw Hill.

Google Class Code- 5i2uaj2j

Marks Pattern

Theory

- Major – 35%
- Minor – 25%
- Project – 20%
- Attendance – 10%
- Assignments – 5%
- Quiz – 5%

Future Scope

Public Sectors -

- DRDO, BEL, BHEL, NTPC, etc…
- Navratn, Maharatna

Private –

Analog Design Engineer, VLSI Design Engineer

Company Names – CISCO, Tata Teleservices, Vedanata, ST Ericsson India, Sony, Sumsung, Qualcomm India, Philips Electronics India Limited, LG Electronics, Grasim Industries, etc…

Ideal Diode

- Ideal Diode

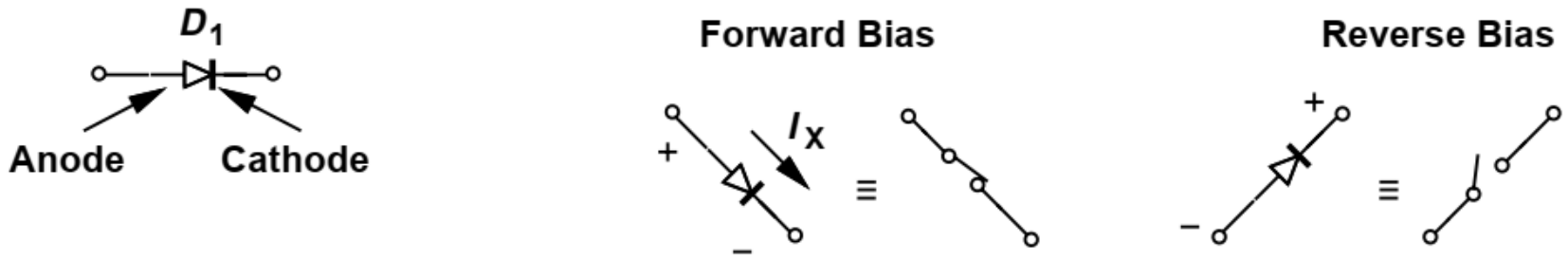

- Ideal IV Characteristics

Ideal Diode

- Ideal Diode

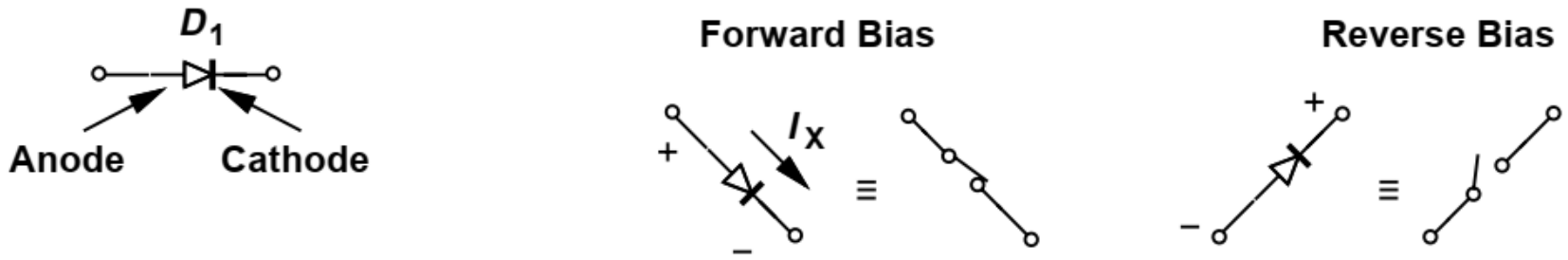

- Ideal IV Characteristics

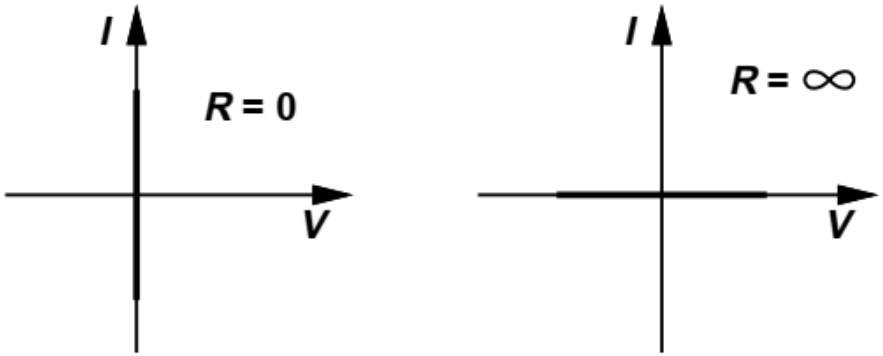

Physics of MOS Transistors

- Structure of MOS capacitor

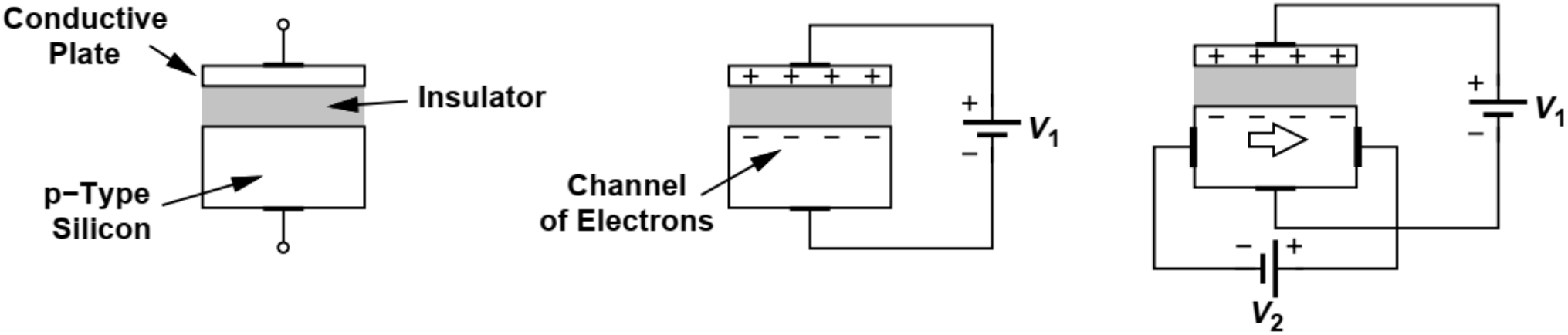

- Channel of electrons forms due to minority carrier concentration.
- At very high frequencies, the minority carriers cannot respond quickly enough to the rapid changes in the AC signal. The capacitance then decreases to a minimum value that depends mostly on the oxide capacitance and depletion width, not the minority carriers' response.

MOS capacitor

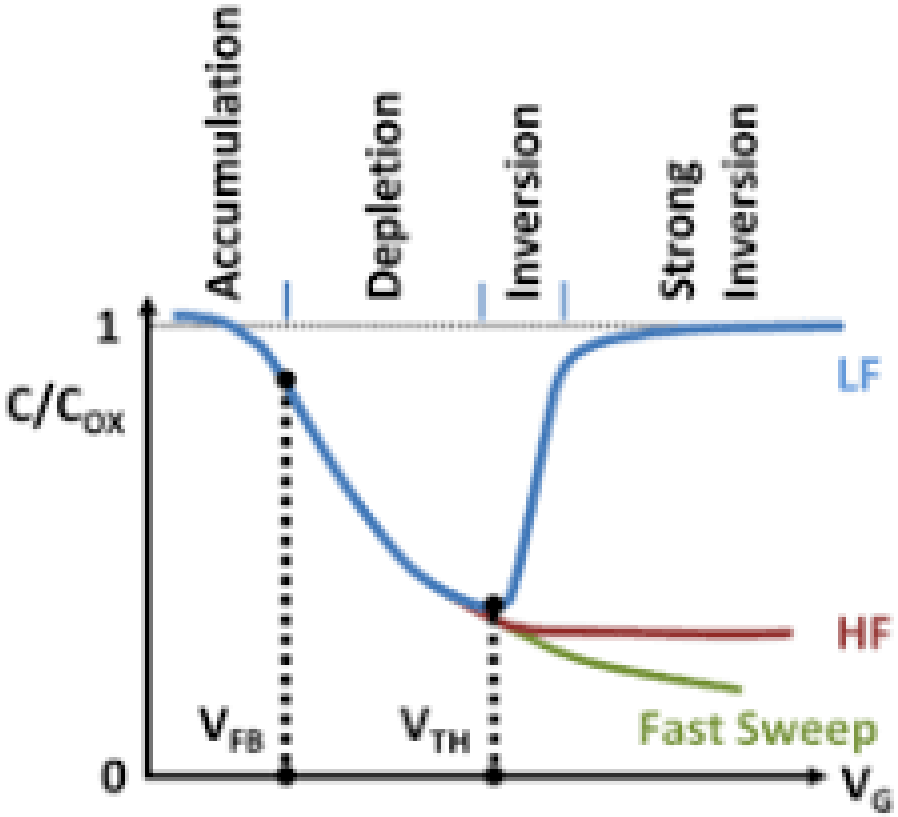

n-MOSFET

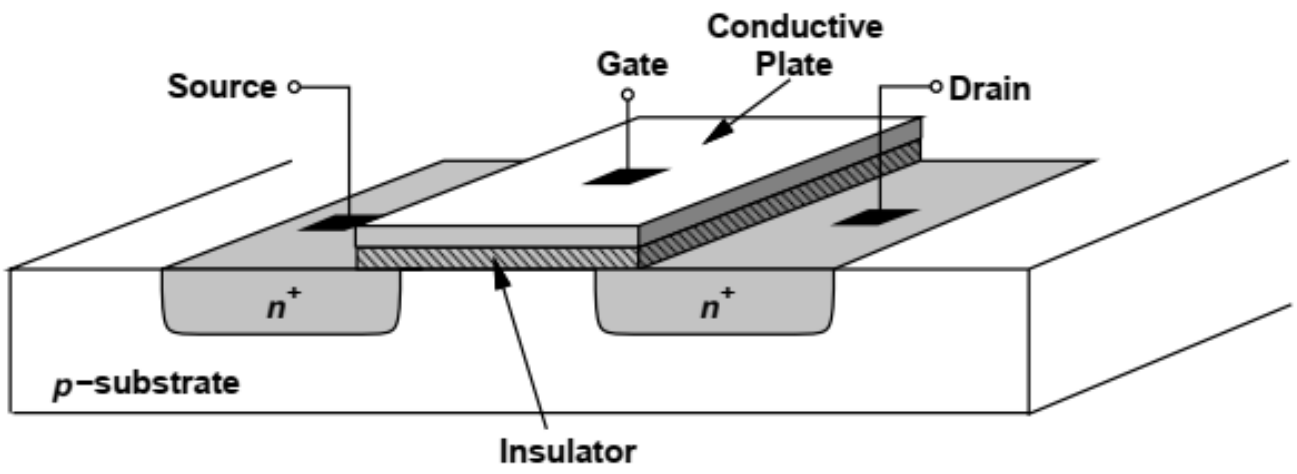
Conductive
Plate
Gate
Source
Drain
n^+
n^+
p-substrate
Insulator

(a)

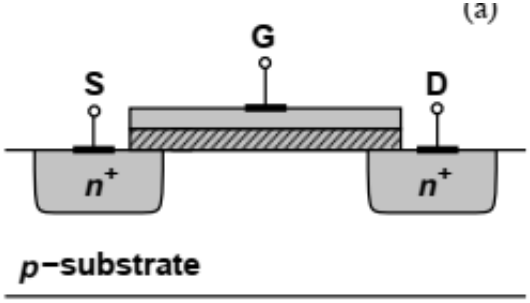
G
S
D
n^+
n^+
p-substrate

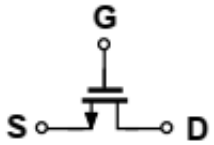
G
S
D

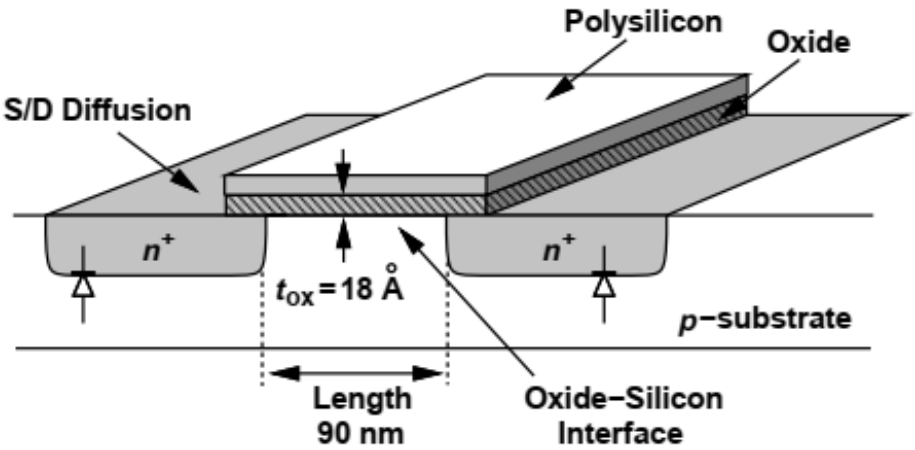
Polysilicon
Oxide
S/D Diffusion
n^+
n^+
t_{ox} = 18 Å
p-substrate
Length
90 nm
Oxide-Silicon
Interface

Working of n-MOSFET

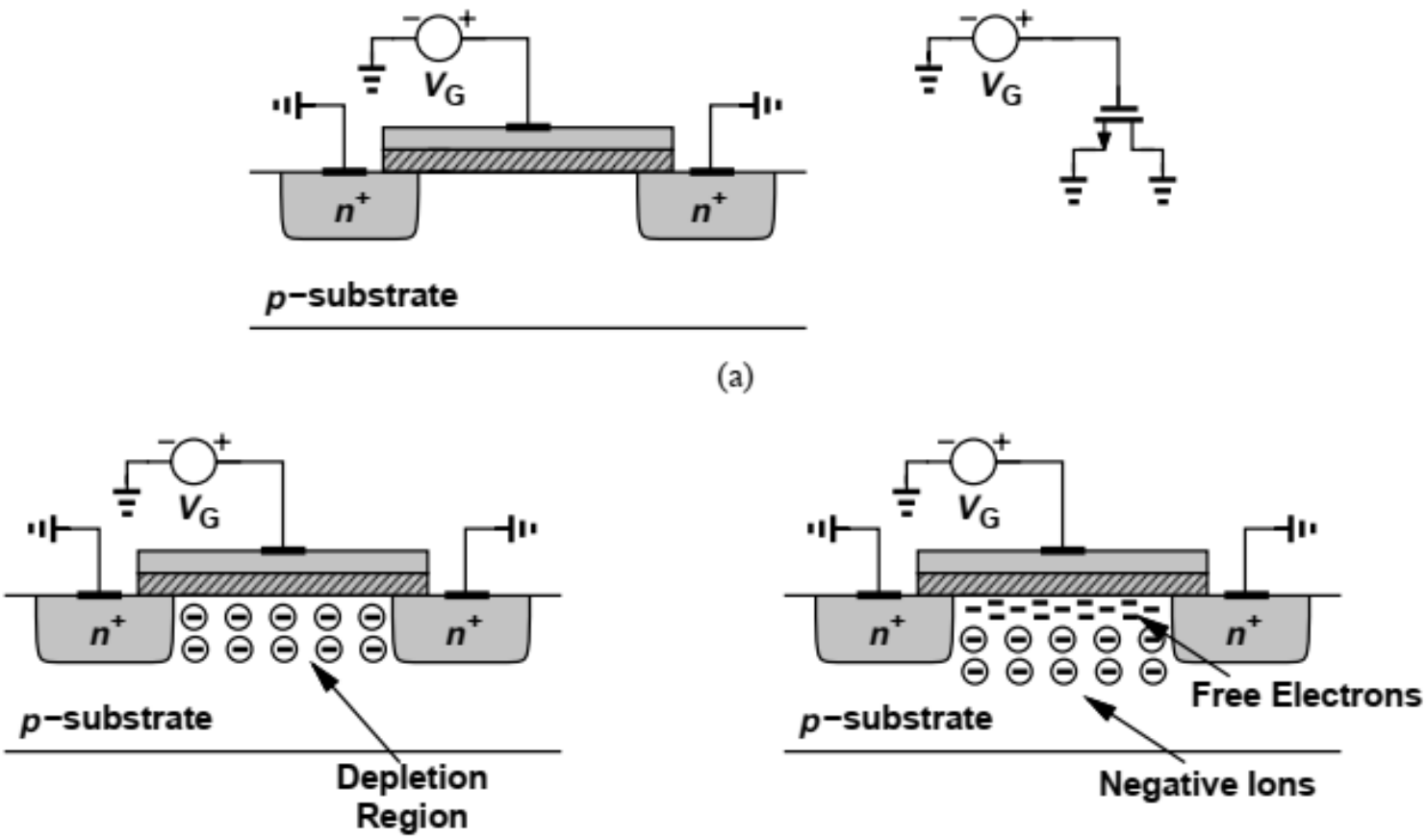

MOSFET with change in channel length and oxide thickness

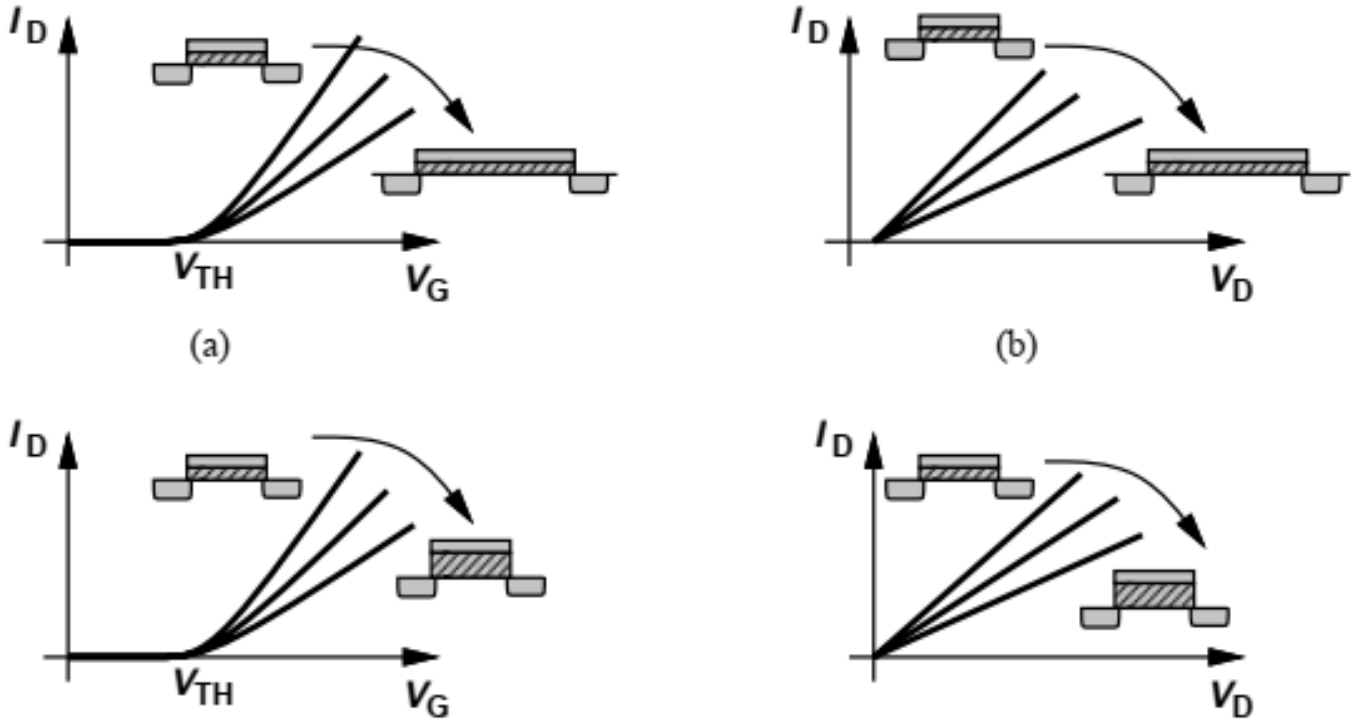

MOSFET with change in Width

t_{ox} cannot.

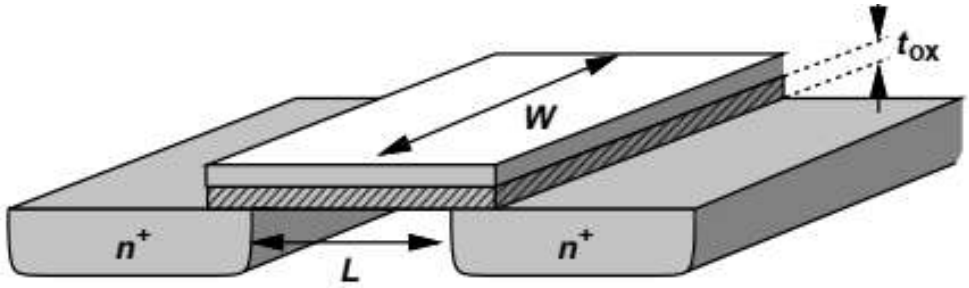

(a)

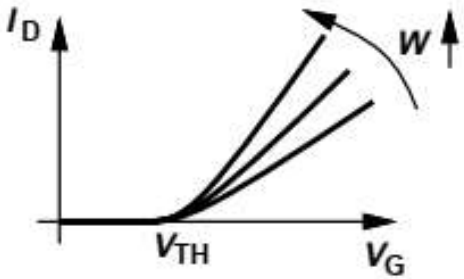

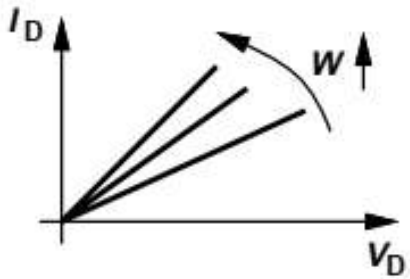

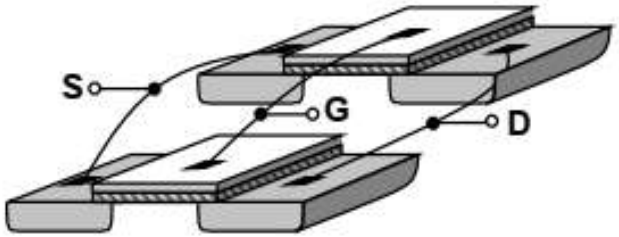

Pinch-off region

- The density of electrons in the channel must increase as V_{GS} = (Effective gate voltage is $V_{GS} - V_{Th}$)
- Voltage at each point along the channel with respect to ground increases as we go from the source towards the drain.
- Effective voltage along the channel length will $V_{GS} - V_D(x)$
- Drain voltage will pull the electrons, the electron carrier concentration beneath the gate will be available only when $V_{GS} > V_{DS}$.
- The point at which the drain voltage exceeds the effective gate voltage will be the pinch-off point and no electrons will be present after that.

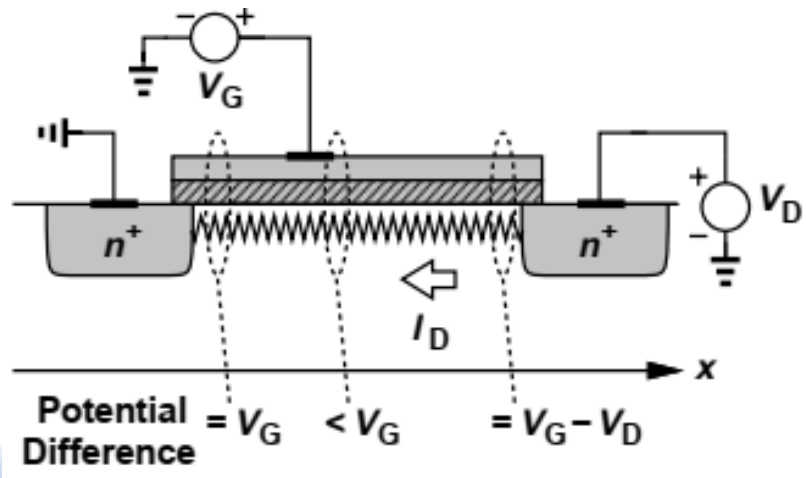

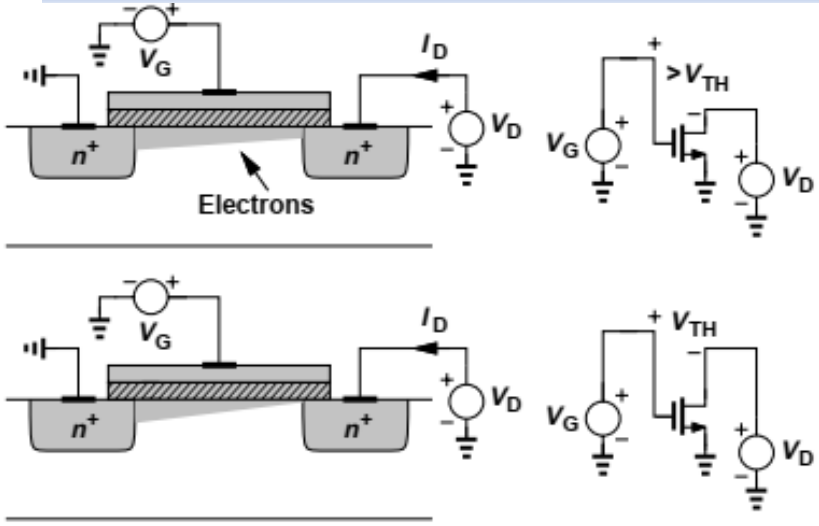

Effective $V_{GS} = V_{GS} - V_{DS}$

$\longrightarrow$ Y

$Q=C(V_G-V_{TH}-V(y))$

$V(y) = 0$ for $Y=0$
$V(y) = V_{DS}$ for $Y = L_G$

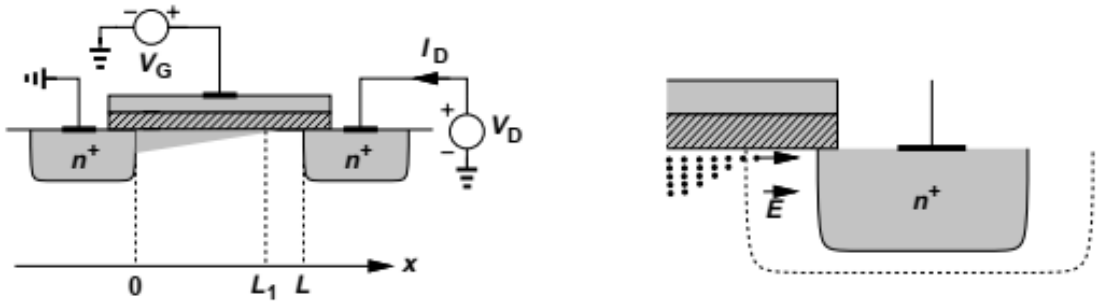

(a) Pinchoff, (b) variation of length with drain voltage, (c) detailed operation near the drain

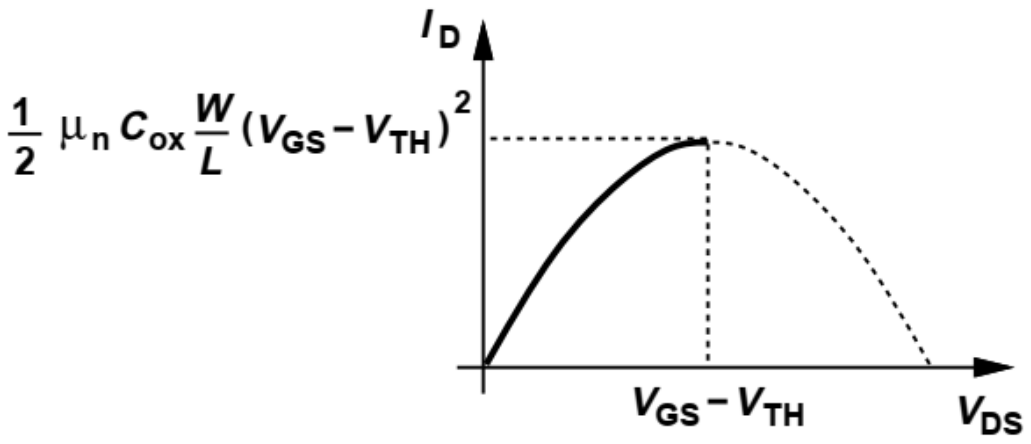

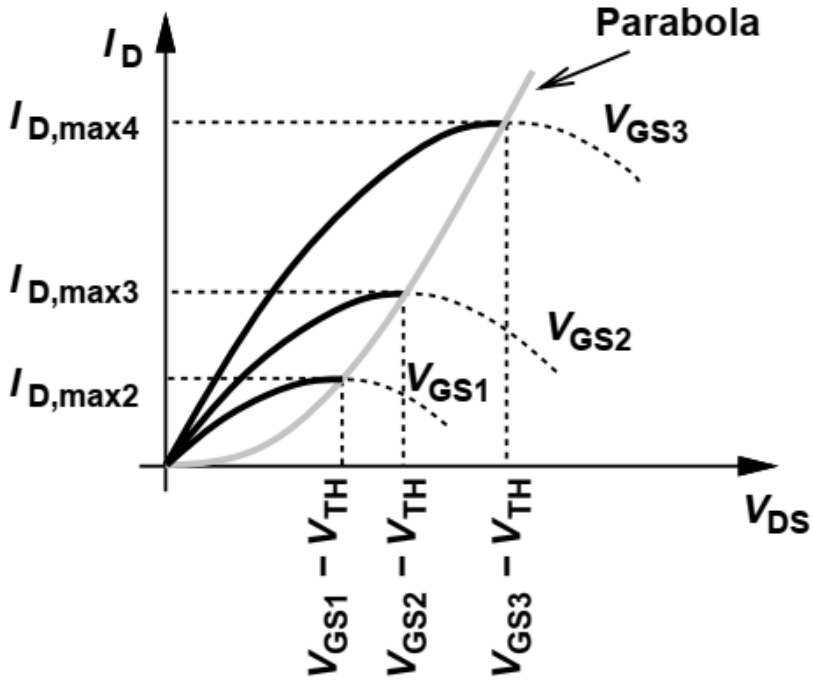

$$I_{D,max} = \frac{1}{2}\mu_n C_{ox}\frac{W}{L}(V_{GS}-V_{TH})^2$$

Triode region and saturation region

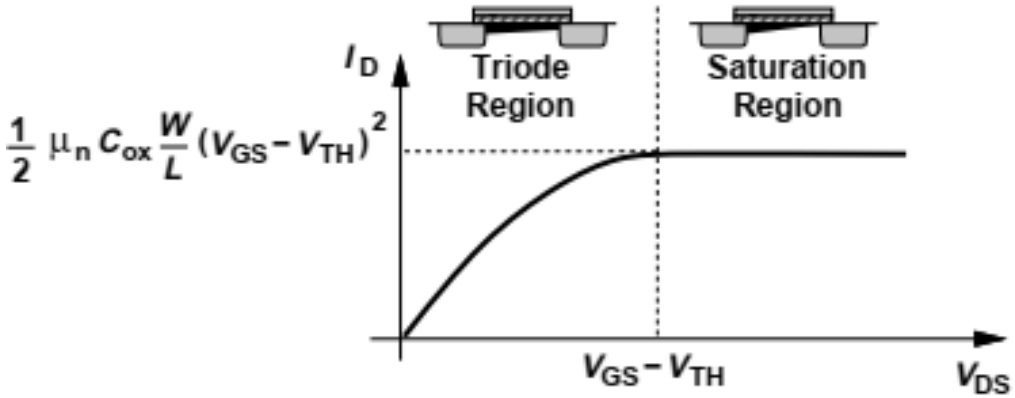

$$I_D = \frac{1}{2}\mu_n C_{ox}\frac{W}{L}[2(V_{GS}-V_{TH})V_{DS} - V_{DS}^2]$$

Triode region and saturation region

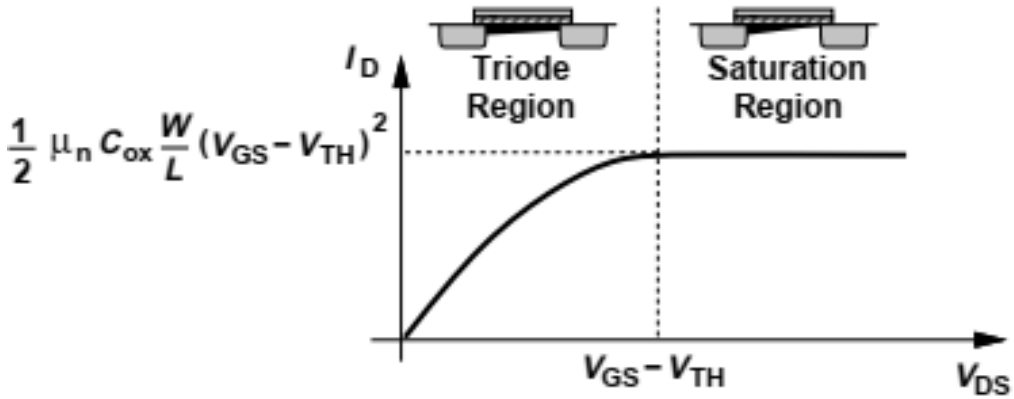

$$I_D = \frac{1}{2}\mu_n C_{ox}\frac{W}{L}[2(V_{GS}-V_{TH})V_{DS} - V_{DS}^2]$$

$$V_{DS} \ll 2(V_{GS}-V_{TH})$$

$$I_D \approx \mu_n C_{ox}\frac{W}{L}(V_{GS}-V_{TH})V_{DS}$$

Triode region

MOSFET as a variable resistor

- The density of electrons in the channel must increase as V_{GS}.
- The value of this resistor changes with the gate voltage.

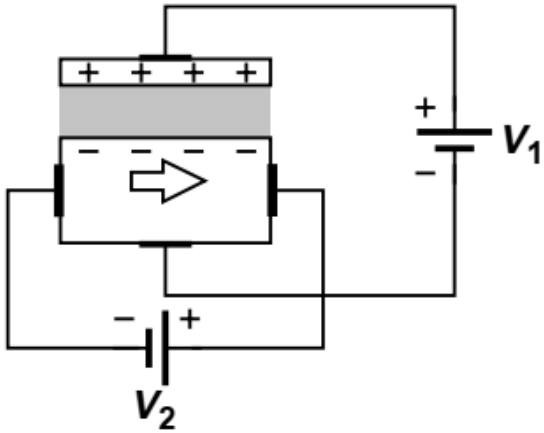

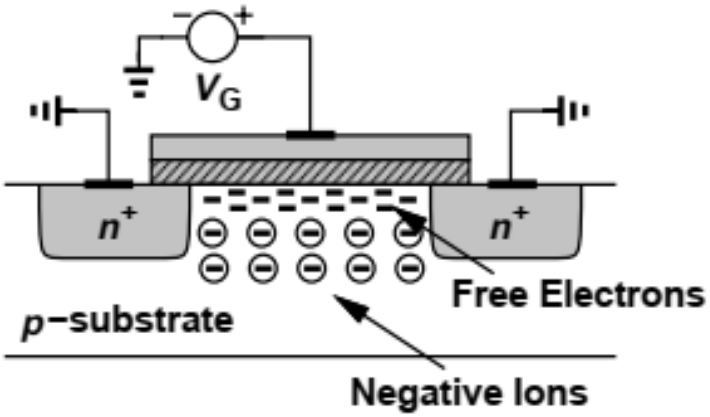

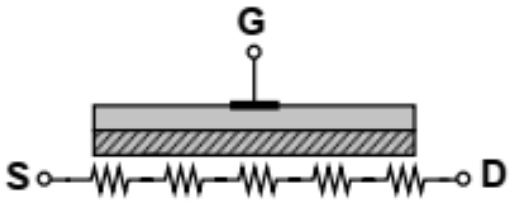

MOSFET with change in V_{GS} and V_{DS}

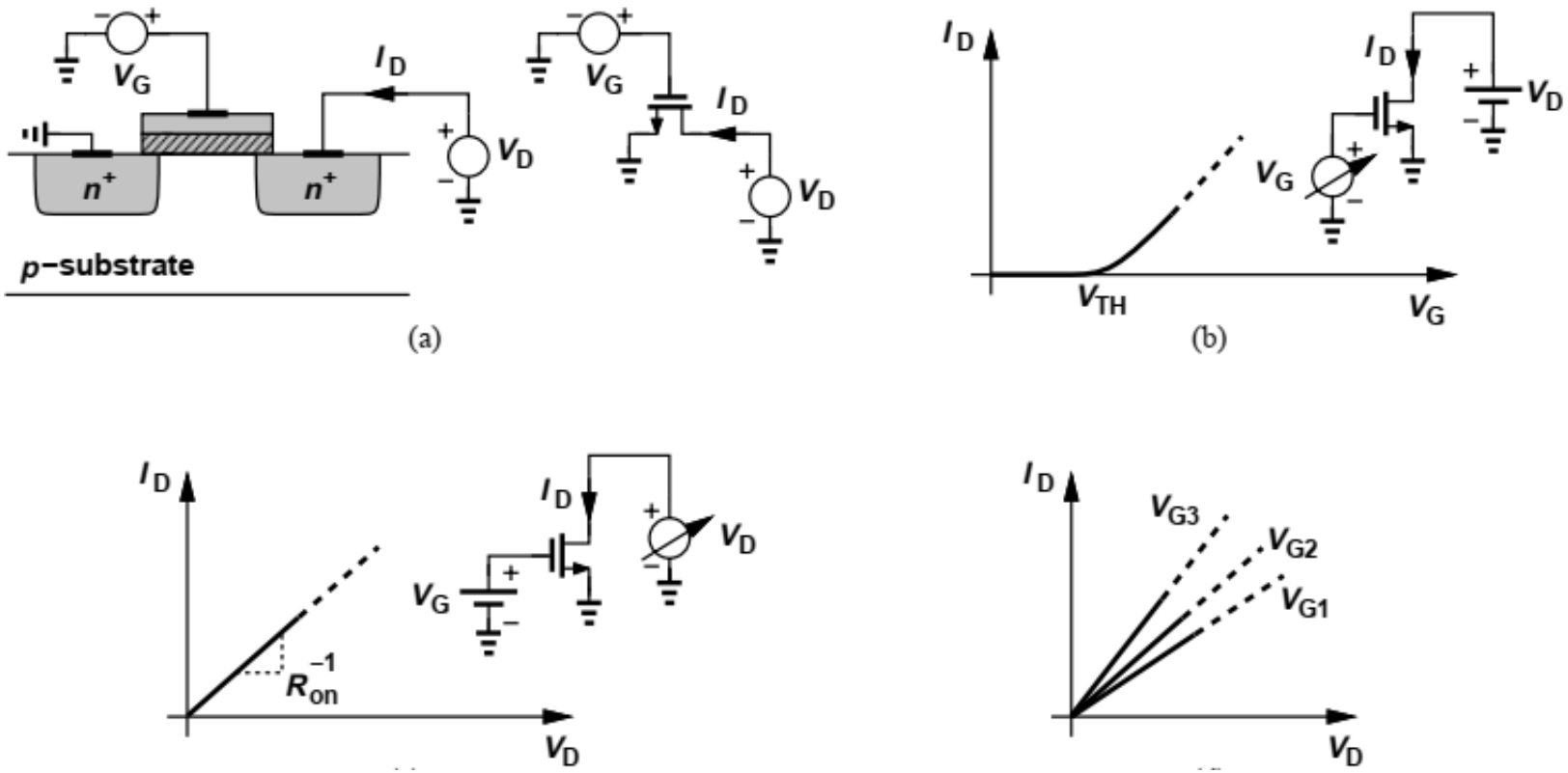

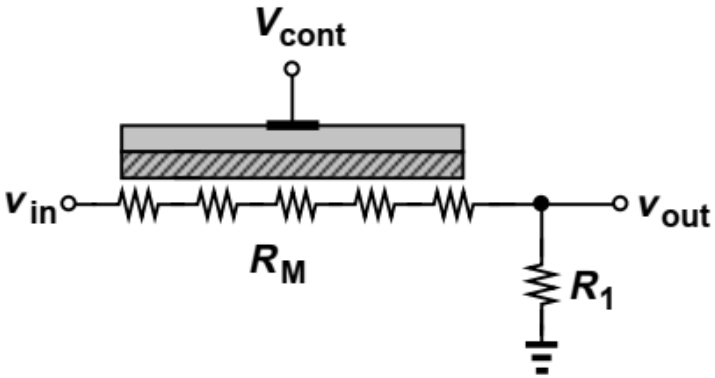

$$\frac{v_{out}}{v_{in}} = \frac{R_1}{R_M + R_1}$$

Triode region

$$V_{DS} \ll 2(V_{GS} - V_{TH})$$

$$I_D \approx \mu_n C_{ox} \frac{W}{L}(V_{GS} - V_{TH})V_{DS}$$

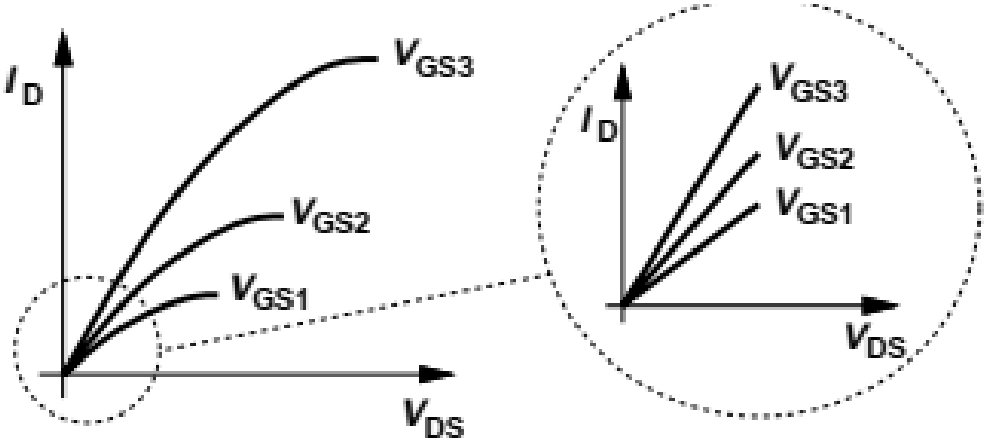

Triode region

$$I_D \approx \mu_n C_{ox} \frac{W}{L}(V_{GS} - V_{TH})V_{DS}$$

$$R_{on} = \frac{1}{\mu_n C_{ox} \frac{W}{L}(V_{GS} - V_{TH})}$$

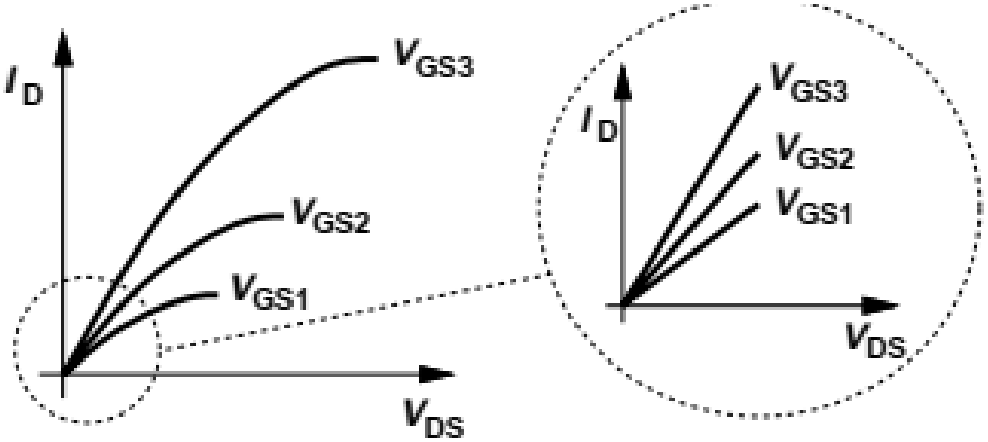

- Calculate the bias current of M_1 in Fig. Assume μCox = 100 μA/V^{2}and V_{TH} = 0.4V.

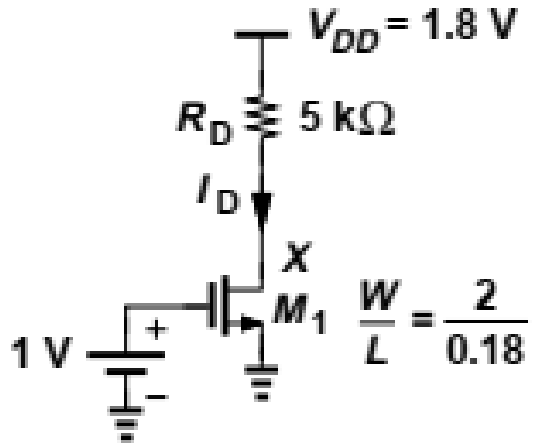

$$I_D = \frac{1}{2}\mu_n C_{ox}\frac{W}{L}[2(V_{GS} - V_{TH})V_{DS} - V_{DS}^2]$$ **Triode region**

$$I_{D,max} = \frac{1}{2}\mu_n C_{ox}\frac{W}{L}(V_{GS} - V_{TH})^2$$ **Saturation region**

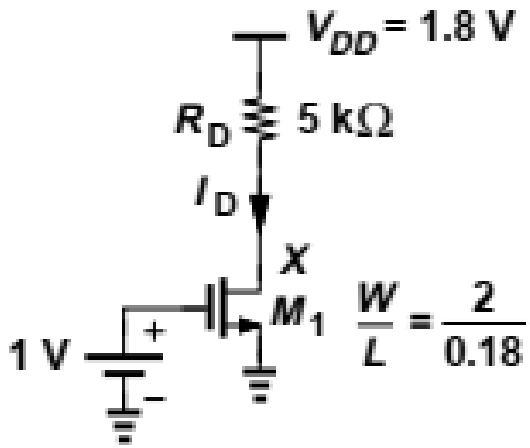

$$I_D = \frac{1}{2}\mu_n C_{ox}\frac{W}{L}(V_{GS} - V_{TH})^2$$
$$= 200\,\mu\text{A}.$$

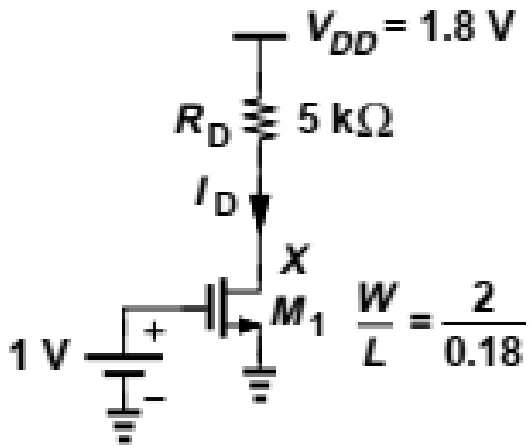

$$I_D = \frac{1}{2}\mu_n C_{ox}\frac{W}{L}(V_{GS} - V_{TH})^2$$
$$= 200\,\mu\text{A}.$$

Check our assumption by calculating the drain potential.

$$V_X = V_{DD} - R_D I_D$$
$$= 0.8\,\text{V}.$$

$V_{DS} > V_{GS} - V_{TH}$
0.8 > 0.6

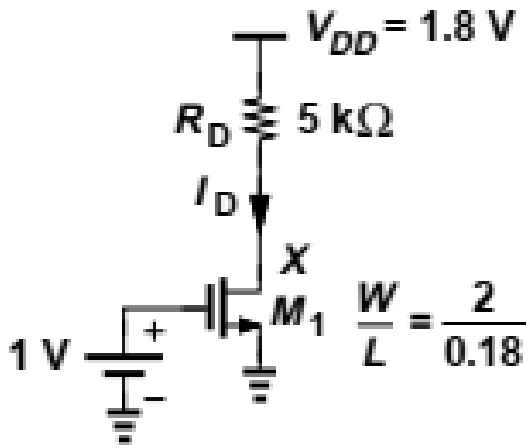

Check our assumption by calculating the drain potential.

$$V_X = V_{DD} - R_D I_D$$
$$= 0.8\,\text{V}.$$

$$I_D = \frac{1}{2}\mu_n C_{ox}\frac{W}{L}(V_{GS} - V_{TH})^2$$
$$= 200\,\mu\text{A}.$$

If gate voltage increases to 1.01 V, then ID = 206.7 μA and V_X = 0.766 V

A change of 10 mV in Gate changing the V_x by 34 mV.

Device driving current

- Calculate the bias current of M_1 in Fig. Assume μC_{ox} = 100 μA/V^{2}and V_{TH} = 0.4V.

$$I_{D,max} = \frac{1}{2}\mu_n C_{ox}\frac{W}{L}(V_{GS} - V_{TH})^2$$

Saturation region

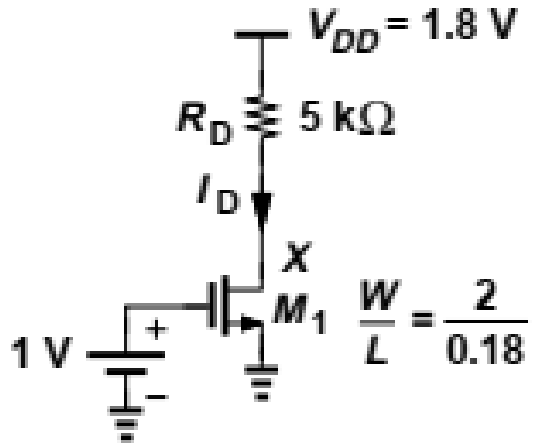

$$I_D = \frac{1}{2}\mu_n C_{ox}\frac{W}{L}(V_{GS} - V_{TH})^2$$
$$= 200\,\mu\text{A}.$$

Check our assumption by calculating the drain potential.

$$V_X = V_{DD} - R_D I_D$$
$$= 0.8\,\text{V}.$$

$V_{DS} > V_{GS} - V_{TH}$

0.8 > 0.6

Channel length Modulation

- Due to pinch-off, the effective channel length will be reduces from L to L-ΔL

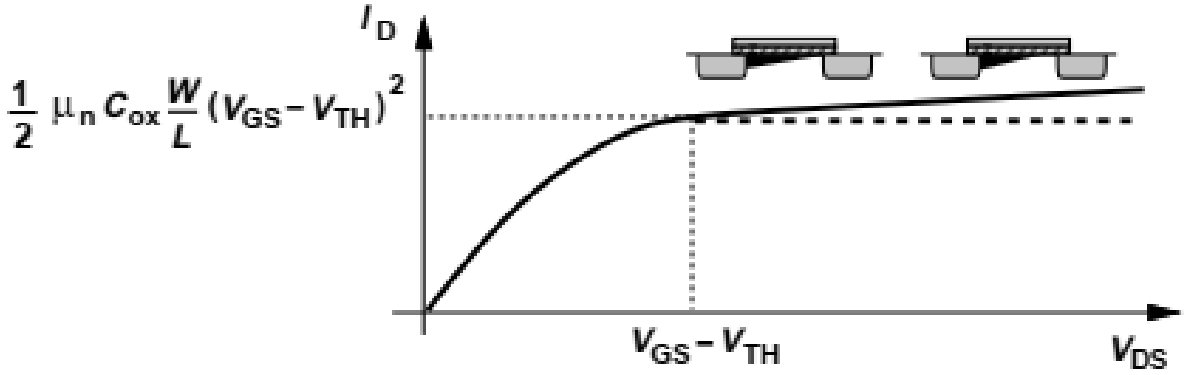

$$I_D = \frac{1}{2}\mu_n C_{ox}\frac{W}{L}(V_{GS} - V_{TH})^2(1 + \lambda V_{DS})$$

- A MOSFET carries a drain current of 1 mA with VDS = 0.5V in saturation. Determine the change in ID, if VDS rises to 1 V and λ = 0.1 V^{-1}. What is the device output impedance?

$$I_{D1} = \frac{1}{2}\mu_n C_{ox}\frac{W}{L}(V_{GS} - V_{TH})^2(1 + \lambda V_{DS1})$$

$$I_{D2} = \frac{1}{2}\mu_n C_{ox}\frac{W}{L}(V_{GS} - V_{TH})^2(1 + \lambda V_{DS2})$$

$$I_{D2} = I_{D1}\frac{1 + \lambda V_{DS2}}{1 + \lambda V_{DS1}}.$$

$$I_{D2} = 1.048\,\text{mA}.$$

$$r_O = \frac{\Delta V_{DS}}{\Delta I_D}$$

$$= 10.42\ \text{k}\Omega.$$

MOS Transconductance

$$I_D = \frac{1}{2}\mu_n C_{ox}\frac{W}{L}(V_{GS} - V_{TH})^2$$

In an voltage amplifier, a small change in input voltage we are expecting a large change in output voltage. A transconductance serves as a measure of the “strength” of the device

$$g_m = \frac{\partial I_D}{\partial V_{GS}}.$$

When device at saturation condition, a small change in input gate voltage, with a large change in drain current can be measure as

$$g_m = \frac{\partial I_D}{\partial V_{GS}}. \qquad g_m = \mu_n C_{ox}\frac{W}{L}(V_{GS} - V_{TH})$$

MOS Transconductance

$$I_D = \frac{1}{2}\mu_n C_{ox}\frac{W}{L}(V_{GS} - V_{TH})^2$$

$$g_m = \frac{\partial I_D}{\partial V_{GS}}.$$

$$g_m = \mu_n C_{ox}\frac{W}{L}(V_{GS} - V_{TH})$$

Substituting V_{GS}-V_{TH} from I_D to g_m

$$g_m = \sqrt{2\mu_n C_{ox}\frac{W}{L}I_D}.$$

Divide g_m by I_D

$$g_m = \frac{2I_D}{V_{GS} - V_{TH}}$$

Gm is estimated through device current and effective gate voltage (large signal analysis)

- Sketch the drain current of versus V_1 as V_1varies from zero to V_{DD}

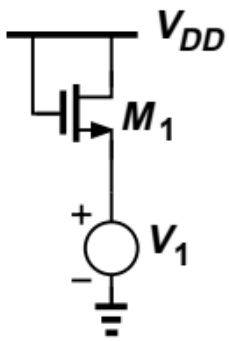

- Sketch the drain current of versus V_1 as V_1varies from zero to V_{DD}
- Device will always be in saturation if drain and gate are connected.

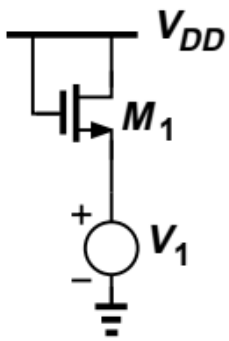

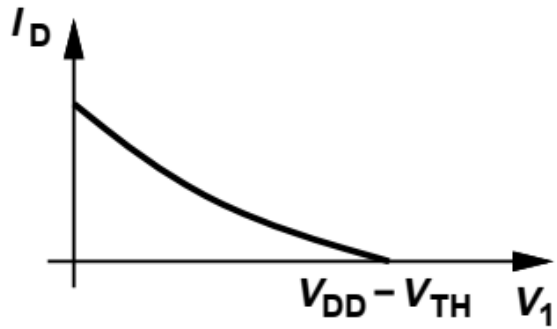

Common Source Amplifier

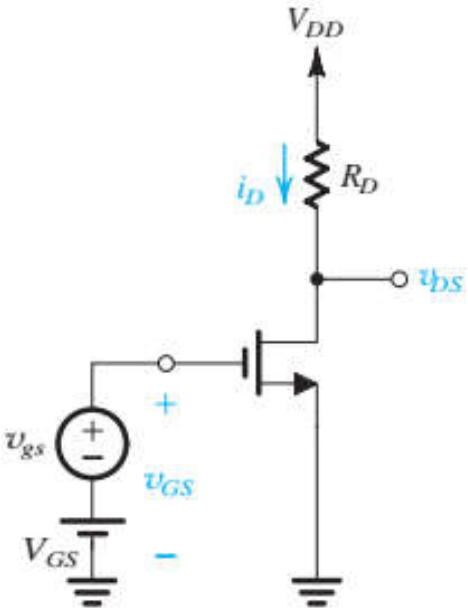

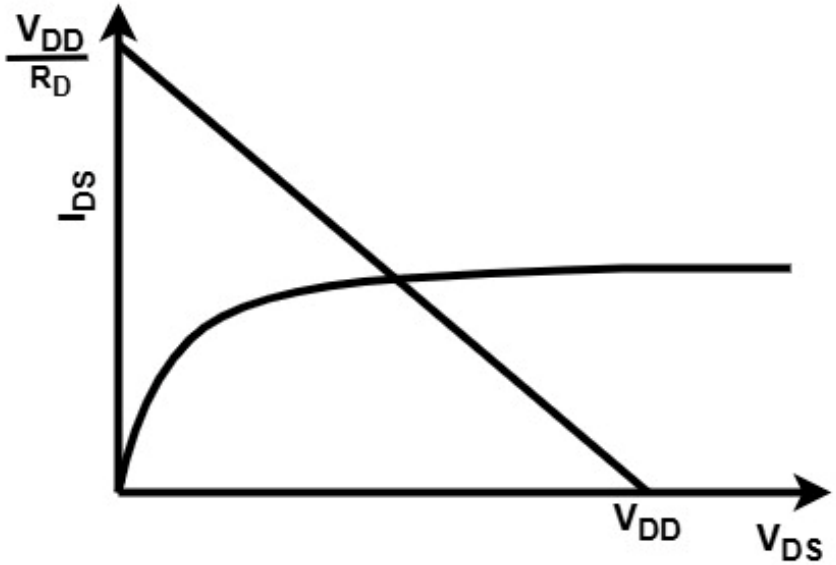

- A change in I_{DS}; current decreases with increase of V_{DS}
- Need to select the V_{GS} such that device should be in saturation.
- If there is a change a small gate voltage say 1mv up and down, there will be not much change in I_{DS} -V_{DS}.

Common Source Amplifier

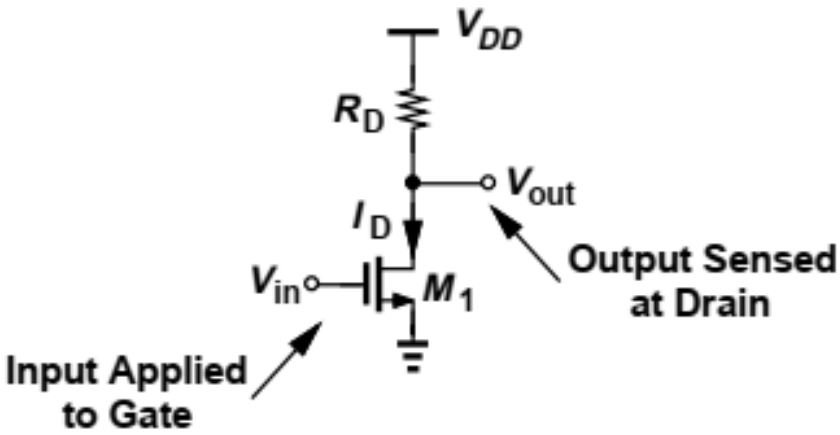

$$V_{DS} \geq V_{GS} - V_{TH}$$

$$V_{DD} - R_D I_D > V_{GS} - V_{TH}$$

$$R_D I_D < V_{DD} - (V_{GS} - V_{TH})$$

Biasing the MOSFET amplifier

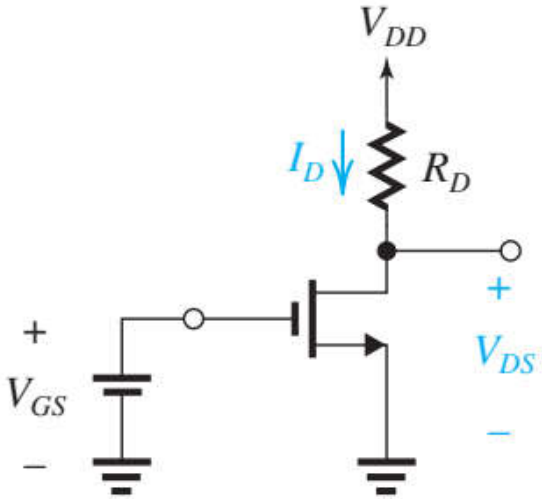

(a)

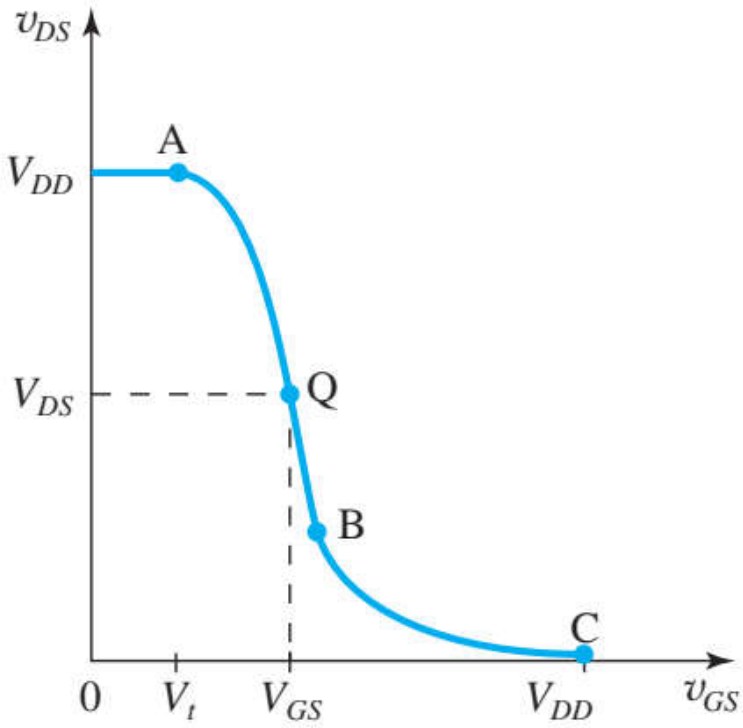

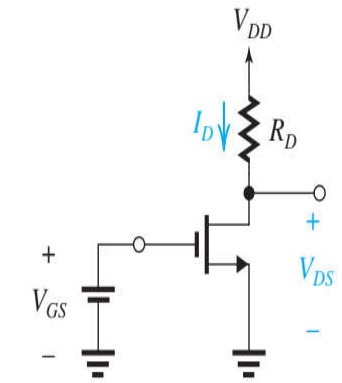
V_{DD}
I_D
R_D
+
V_{DS}
−
+
V_{GS}
−

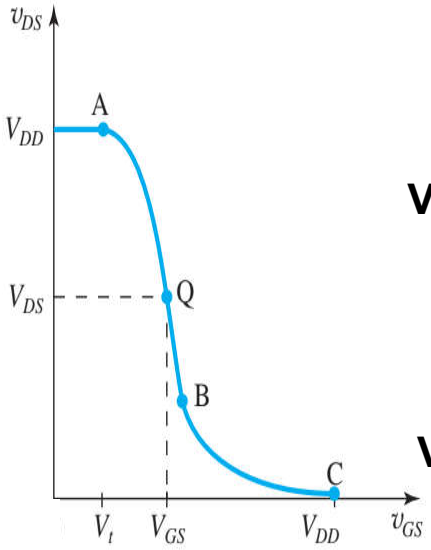
v_{DS}
V_{DD}
A
V_{DS}
Q
B
C
V_t
V_{GS}
V_{DD}
v_{GS}

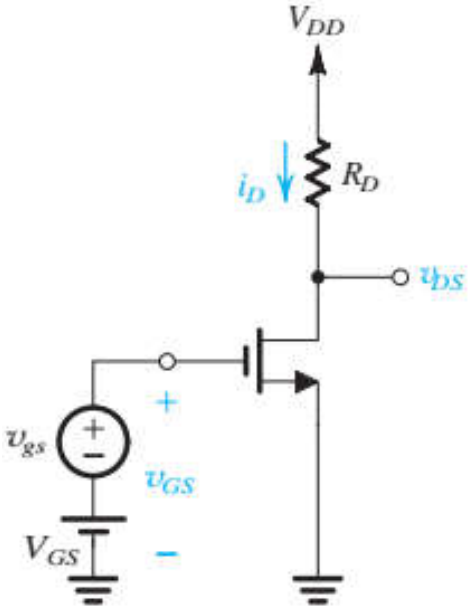
V_{DD}
i_D
R_D
v_{DS}
+
v_{gs}
v_{GS}
V_{GS}
−

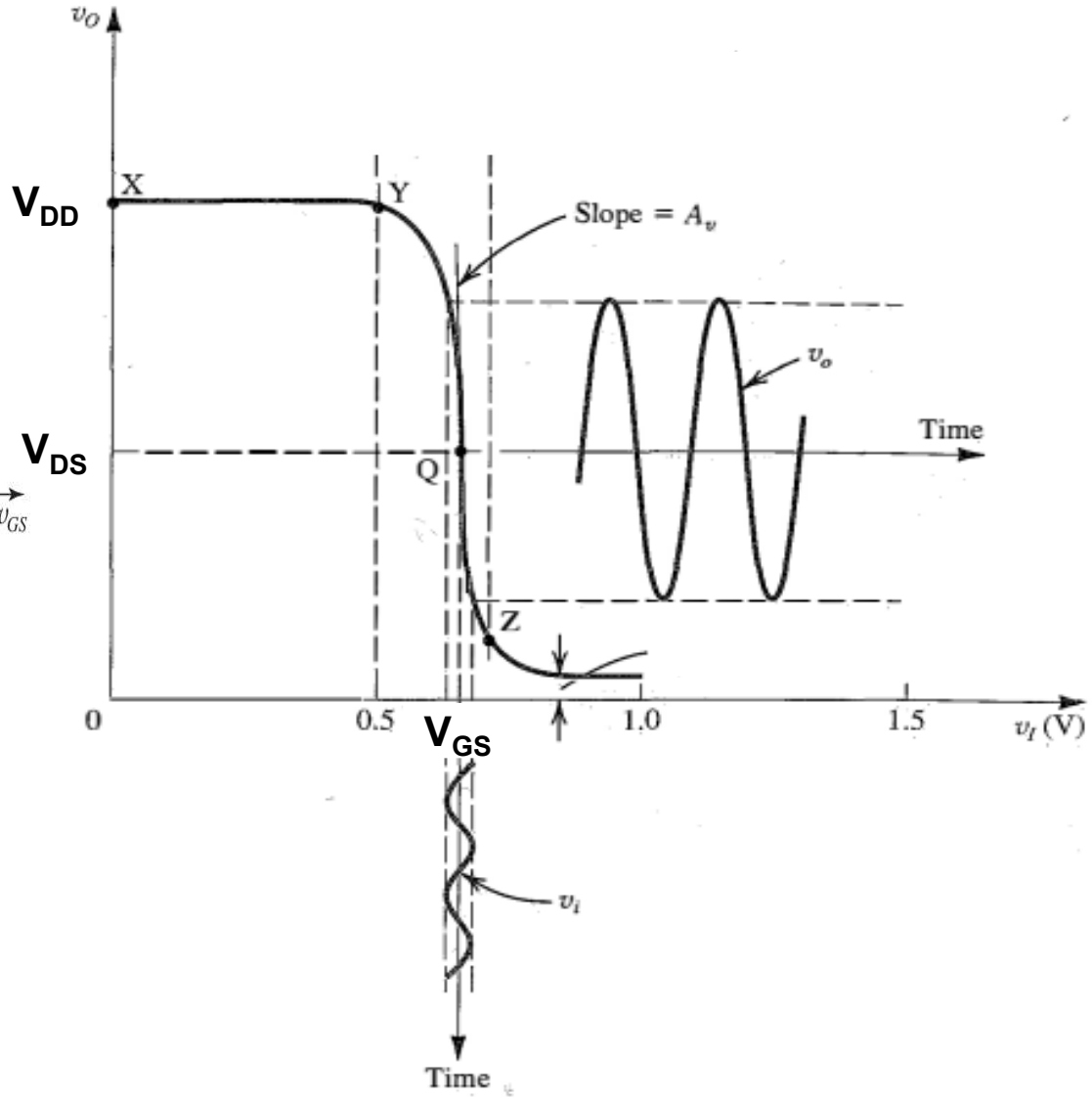
v_O
V_{DD}
X
Y
Slope = A_v
v_o
Time
V_{DS}
Q
Z
0
0.5
1.0
1.5
v_I (V)
V_{GS}
v_i
Time

Common Source Amplifier

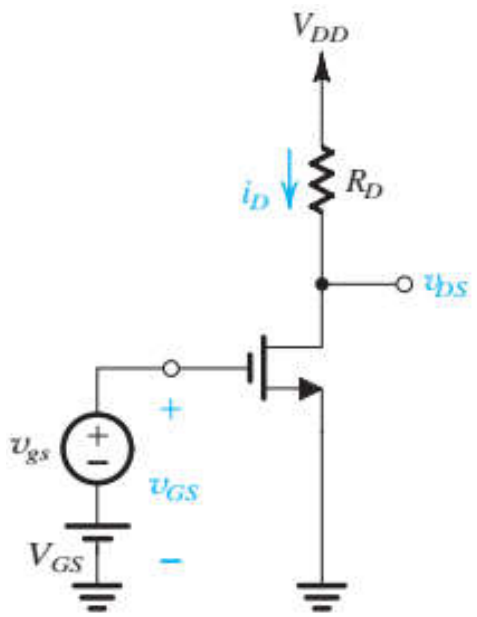

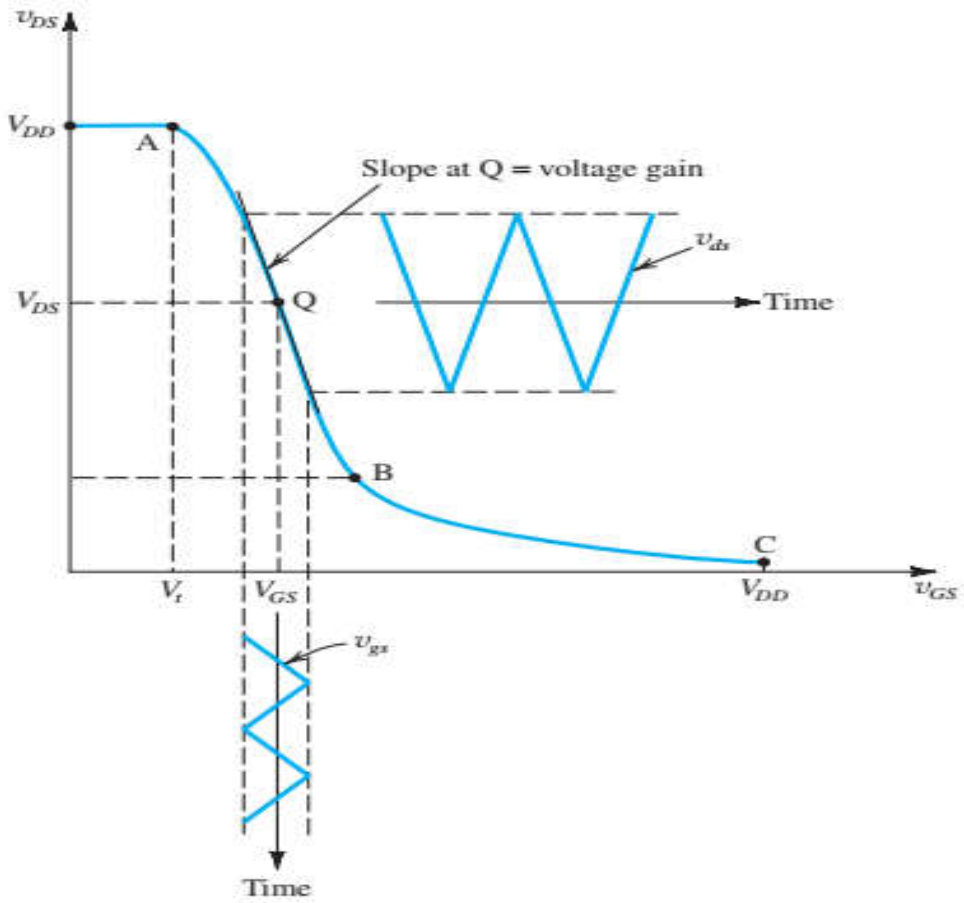

Large signal model

$V_{GS} > V_{TH}$

$V_{DS} > V_{GS} - V_{TH}$

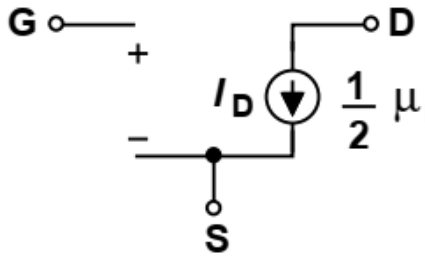

$$I_D = \frac{1}{2}\mu_n C_{ox}\frac{W}{L}(V_{GS}-V_{TH})^2(1+\lambda V_{DS})$$

$V_{GS} > V_{TH}$

$V_{DS} << 2(V_{GS} - V_{TH})$

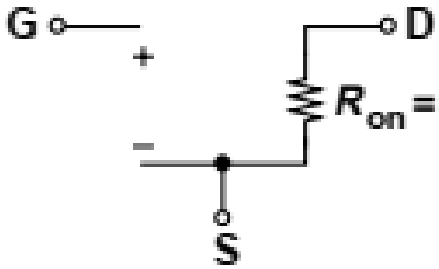

$$R_{on} = \frac{1}{\mu_n C_{ox}\frac{W}{L}(V_{GS}-V_{TH})}$$

$V_{GS} > V_{TH}$

$V_{DS} < V_{GS} - V_{TH}$

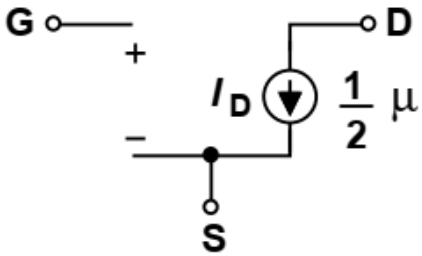

$$I_D = \frac{1}{2}\mu_n C_{ox}\frac{W}{L}[2(V_{GS}-V_{TH})V_{DS}+V_{DS}^2]$$

Small signal model (n-FET)

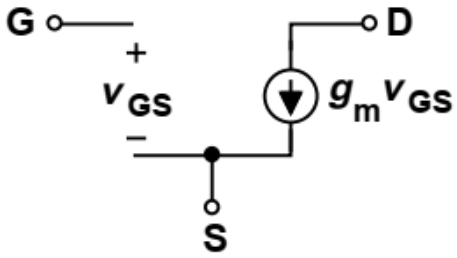

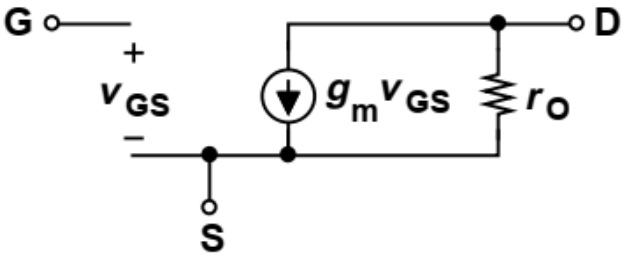

$$r_O = \left(\frac{\partial I_D}{\partial V_{DS}}\right)^{-1}$$

$$= \frac{1}{\frac{1}{2}\mu_n C_{ox}\frac{W}{L}(V_{GS} - V_{TH})^2 \cdot \lambda}.$$

$$r_O \approx \frac{1}{\lambda I_D}$$

Large signal and Small signal Model

- Amplifiers, may incorporate a large number of transistors, thus posing great difficulties in the analysis and design.
- Small-signal model from the large-signal is relatively straightforward.
- Large signal models do both ac and dc analysis.
- Small signal models do only ac analysis after doing dc analysis separately (due to superposition w.r.t. linearity).
- Small signal analysis is a specific case of large signal models at a specific operating point to assume linearity.
- small-signal analysis deals with only (small) changes in voltages and currents in a circuit around their quiescent values.

Large signal and Small signal Model

- DC biasing circuits (is required with large signal models before small signal ac models) are obtained from large signal models at zero frequency (neglecting effects of capacitors and inductors).
- Small signal parameters such as gm, ro may be estimated through large signal analysis.
- Voltage difference between every two terminals (while the third terminal remains at a constant potential), determine the changes in the currents flowing through all terminals, and represent the results by proper circuit elements such as controlled current sources or resistors.

Large signal and Small signal Model

- First, we compute the operating (quiescent) conditions (terminal voltages and currents) of each transistor in the absence of signals. It determines the region of operation (active or saturation) and the small-signal parameters of each device.
- Second, perform “small-signal analysis” (may apply the superposition at the edge of saturation to find the limit) i.e., study the response of the circuit to small signals and compute quantities such as the voltage gain, current gain and I/O impedances.
- Ground all constant voltage sources and open all constant current sources while constructing the small signal equivalent circuit.

Magnitude of the ac signal applied for amplification must be small so that

- The transistor operates in the linear region for the whole the transistor operates in the linear region for the whole cycle of input (called as a linear amplifier).
- The transistor is never driven into saturation or cut-off region.

Large signal model and Small signal model

$$v_{GS} = V_{GS} + v_{gs}$$

$$i_D = \frac{1}{2}k_n'\frac{W}{L}(V_{GS} + v_{gs} - V_t)^2$$

$$= \frac{1}{2}k_n'\frac{W}{L}(V_{GS} - V_t)^2 + k_n'\frac{W}{L}(V_{GS} - V_t)v_{gs} + \frac{1}{2}k_n'\frac{W}{L}v_{gs}^2$$

$$\frac{1}{2}k_n'\frac{W}{L}v_{gs}^2 \ll k_n'\frac{W}{L}(V_{GS} - V_t)v_{gs}$$

$$v_{gs} \ll 2(V_{GS} - V_t)$$

$$i_D \simeq I_D + i_d$$

$$g_m = k_n'\frac{W}{L}V_{OV}$$

$$i_d = k_n'\frac{W}{L}(V_{GS} - V_t)v_{gs}$$

Practical Voltage Amplifier

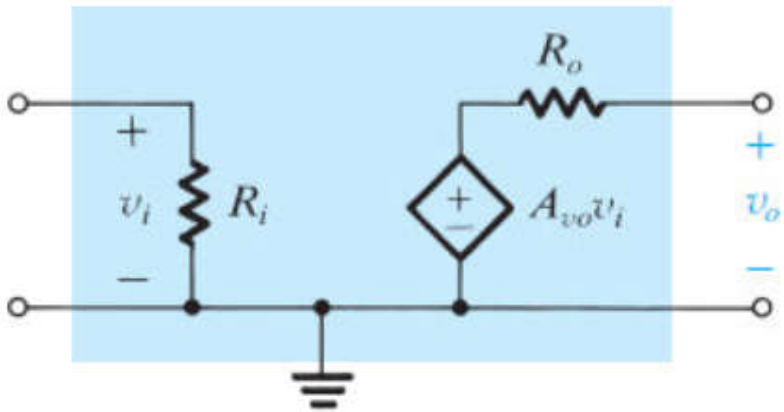

Circuit model for the voltage amplifier.

$R_i >> R_S$
$R_O << R_L$

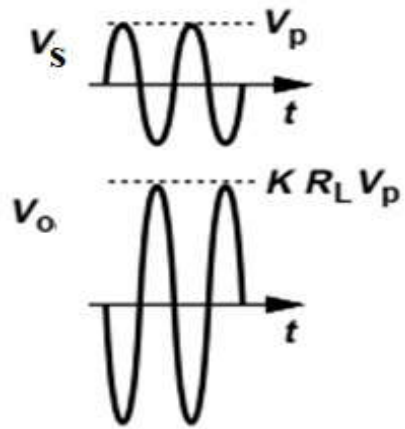

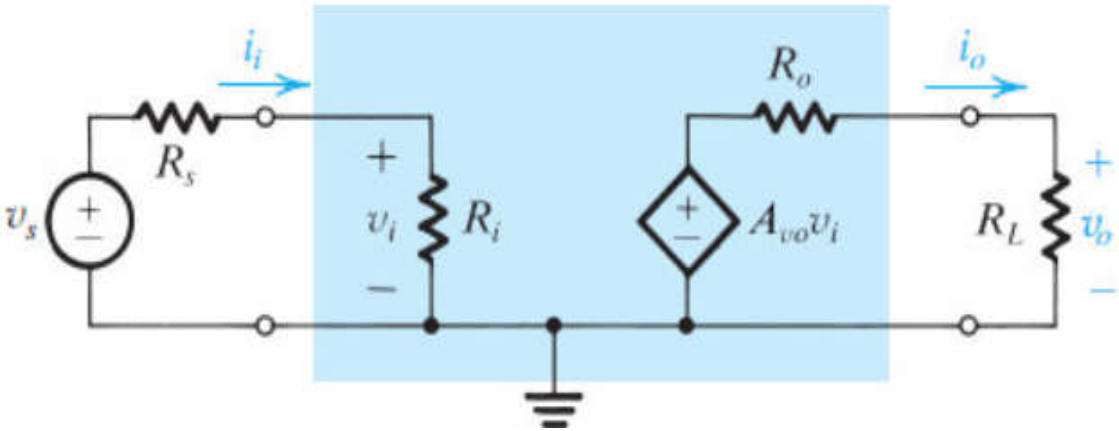

The voltage amplifier with input signal source and load.

Calculation of Impedance

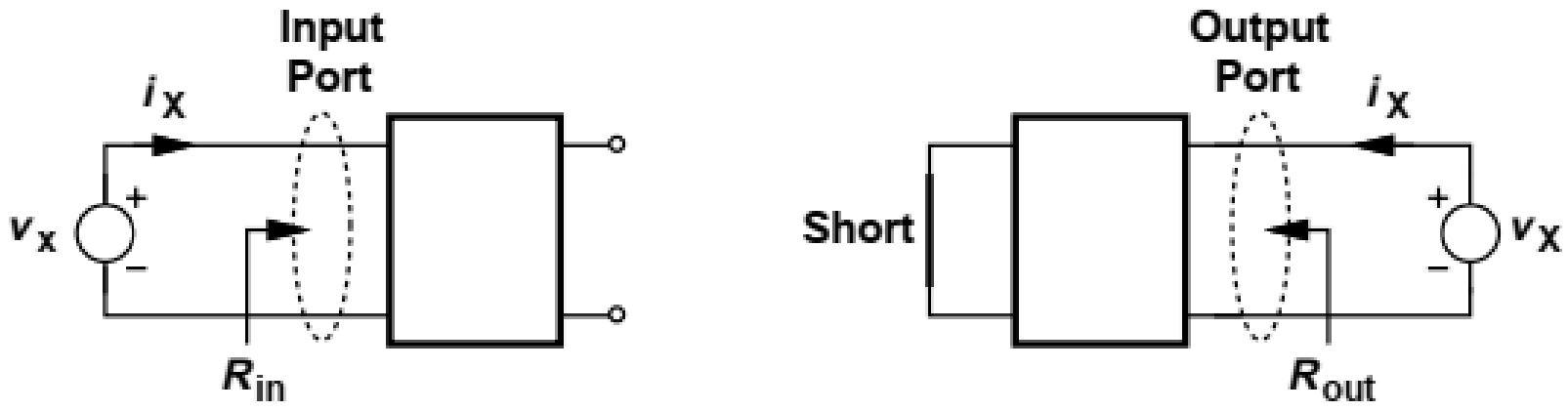

Common Source Amplifier

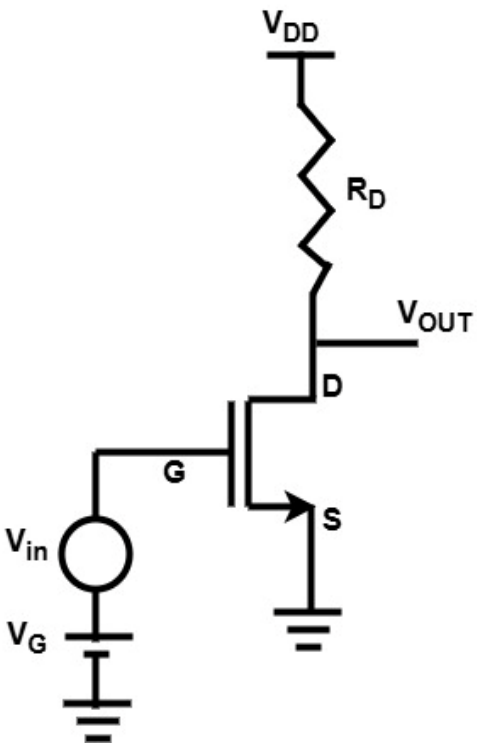

- **Always need to keep the MOSFET in saturation to make amplif**
- **Assuming the biasing has been incorporated**
- **Make the small signal model which reflects a change i_d due to small signal V_{in}**

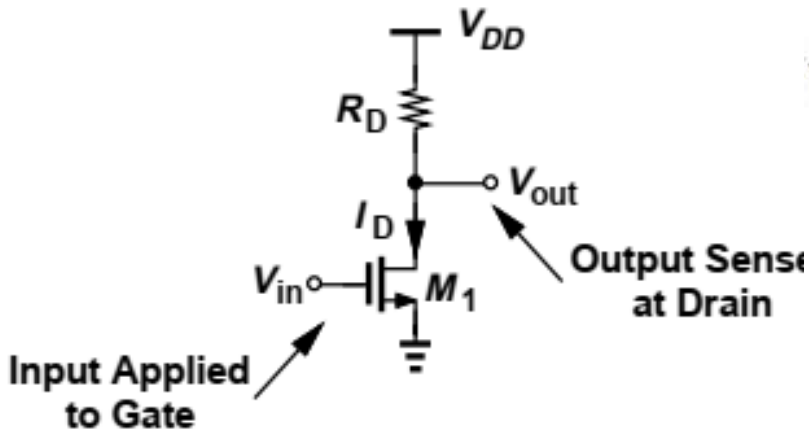

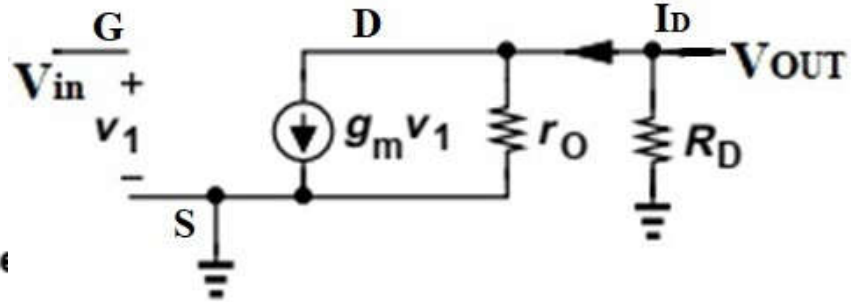

Common Source Amplifier

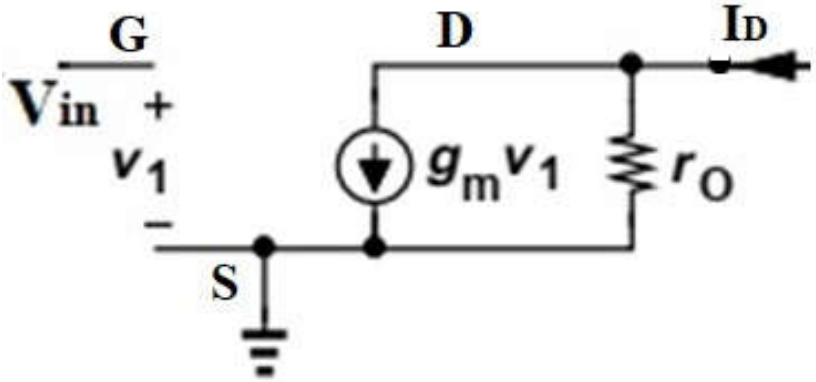

Consider only MOSFET

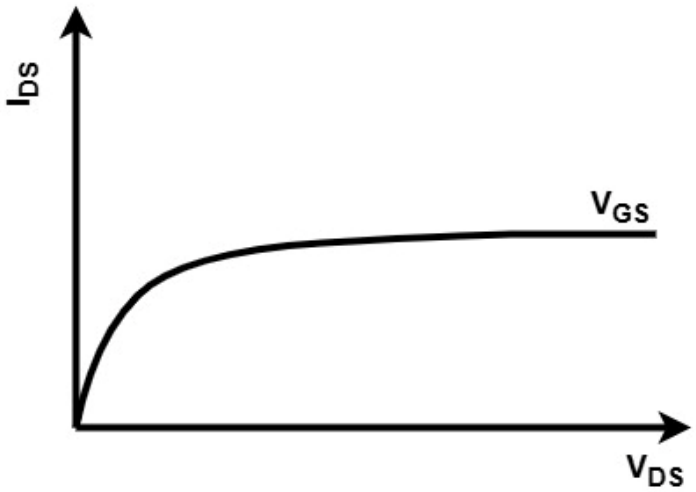

$$I_D = g_m v_1 + v_{ds} / r_o$$

$g_m = \Delta I_D / \Delta V_{GS}$; for a fixed V_{DS}
$r_o = (\Delta I_D / \Delta V_{DS})^{-1}$ for a fixed V_{GS}

Transconductance and output resistance

Transconductance

$$I_D = \frac{1}{2}\mu_n C_{ox}\frac{W}{L}(V_{GS} - V_{TH})^2$$

$$g_m = \frac{\partial I_D}{\partial V_{GS}}.$$

$$g_m = \mu_n C_{ox}\frac{W}{L}(V_{GS} - V_{TH})$$

Substituting V_{GS}-V_{TH} from I_D to g_m

$$g_m = \sqrt{2\mu_n C_{ox}\frac{W}{L}I_D}.$$

Divide g_m by I_D

$$g_m = \frac{2I_D}{V_{GS} - V_{TH}}$$

Output resistance

$r_o = 1 / \lambda I_{DS} = V_A / I_{DS}$

p-FET

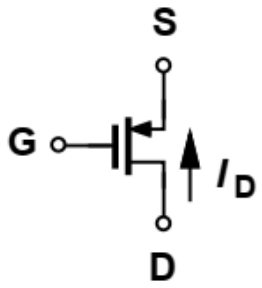

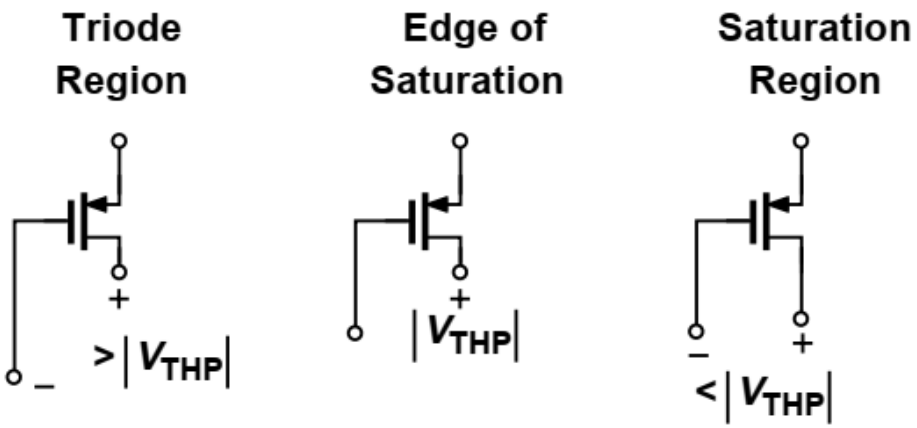

Replace the V_{GS}, V_{DS}, V_{TH} by V_{SG}, V_{SD} and $|V_{TH}|$ in n-FET drive current equation to get the p-FET drive current

p-FET

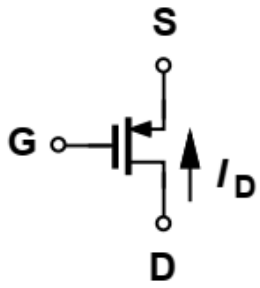

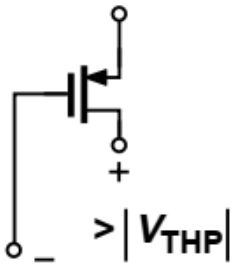

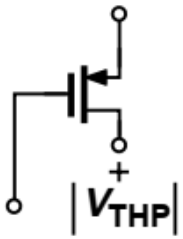

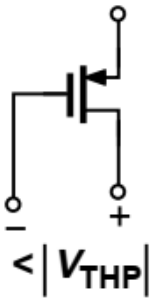

Replace the V_{GS}, V_{DS}, V_{TH} by V_{SG}, V_{SD} and $|V_{TH}|$ in n-FET drive current equation to get the p-FET drive current

$V_S > V_D$
$V_{SG} \geq |V_{TH}|$
$V_{SD} < V_{SG} - |V_{TH}|$

$-V_D + V_G < -|V_{TH}|$

$V_D - V_G > |V_{TH}|$

$V_S > V_D$
$V_{SG} \geq |V_{TH}|$
$V_{SD} = V_{SG} - |V_{TH}|$

$V_D - V_G = |V_{TH}|$

$V_S > V_D$
$V_{SG} \geq |V_{TH}|$
$V_{SD} \geq V_{SG} - |V_{TH}|$

$V_D - V_G < |V_{TH}|$

p-FET

n-FET

$$I_D = \frac{1}{2}\mu_n C_{ox}\frac{W}{L}[2(V_{GS} - V_{TH})V_{DS} - V_{DS}^2]$$ Triode region

$$I_{D,max} = \frac{1}{2}\mu_n C_{ox}\frac{W}{L}(V_{GS} - V_{TH})^2$$ Saturation region

p-FET

$$I_D = \frac{1}{2}\mu_p C_{ox}\frac{W}{L}\left[2\left(V_{SG} - |V_{TH}|\right)V_{SD} - {V_{SD}}^2\right]$$ Triode region

$$I_{D,max} = \frac{1}{2}\mu_p C_{ox}\frac{W}{L}\left(V_{SG} - |V_{TH}|\right)^2$$ Saturation region

p-FET Small Signal Model

- Ground all constant voltage sources and open all constant current sources while constructing the small signal equivalent circuit

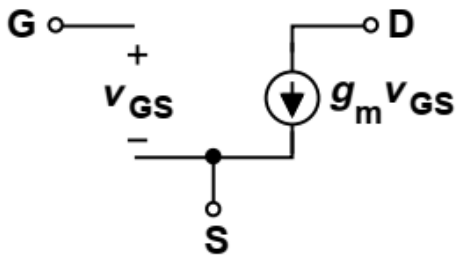

n-FET

p-FET Small Signal Model

- Ground all constant voltage sources and open all constant current sources while constructing the small signal equivalent circuit

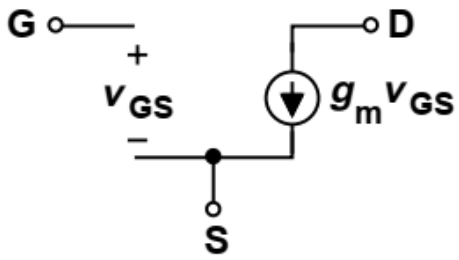

n-FET

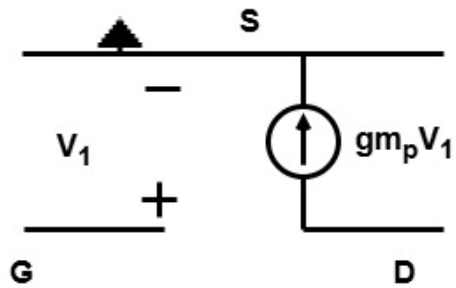

p-FET

Introduction

- Voltage Source
- Current Source
- Amplifier Circuits
- Voltage Amplifier
- Current Amplifier

Voltage Amplifier

- Voltage source
- Input Signal
- Amplification circuit
- Output

Practical Voltage Amplifier

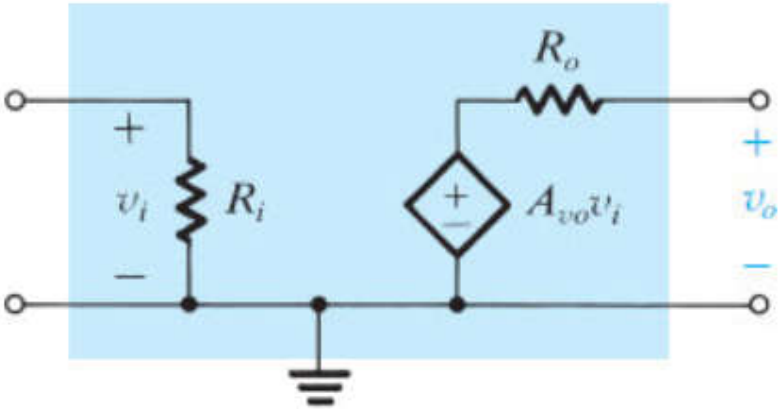

Circuit model for the voltage amplifier.

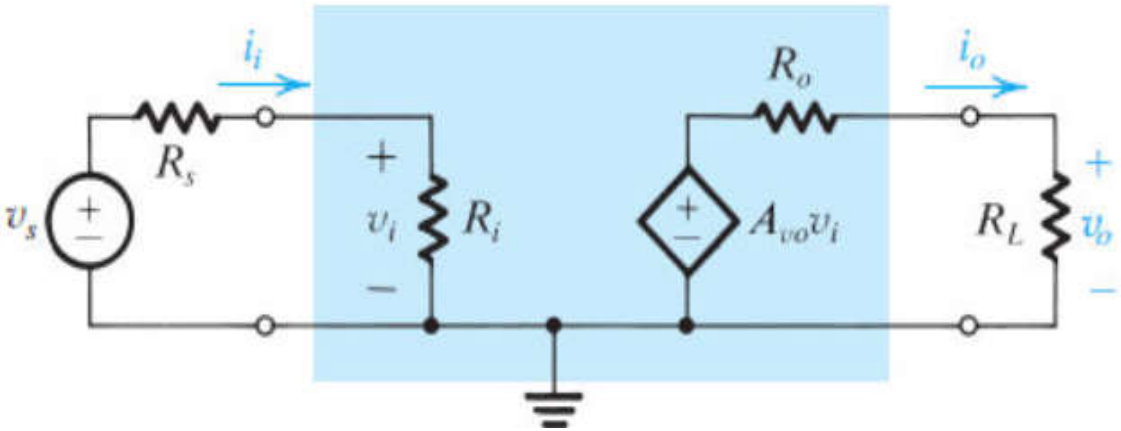

The voltage amplifier with input signal source and load.

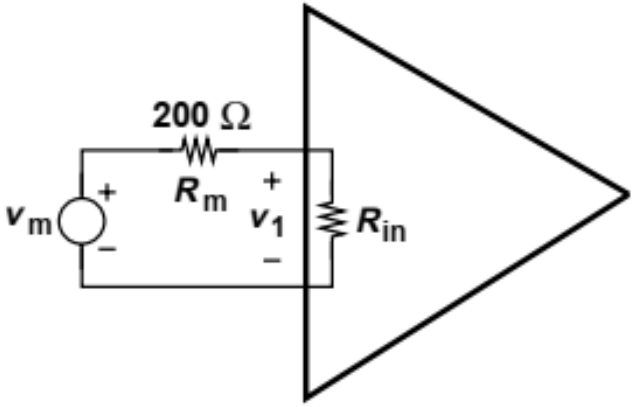

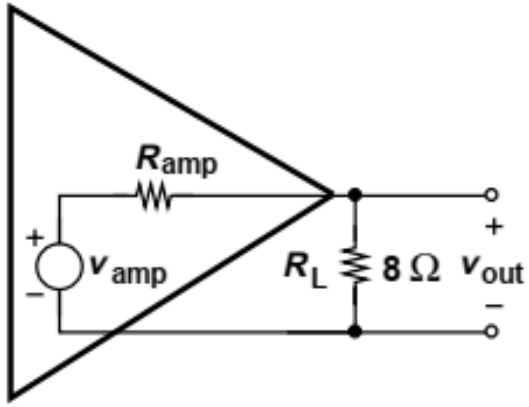

For R_{in} = 2 kΩ, v_1 = 0.91 v_{in}
For R_{in} = 500 Ω, v_1 = 0.71 v_{in}

For R_L = 10 Ω, v_{out} = 0.4 v_{amp}
For R_L = 2 Ω, v_{out} = 0.8 v_{amp}

Amplifier Parameter

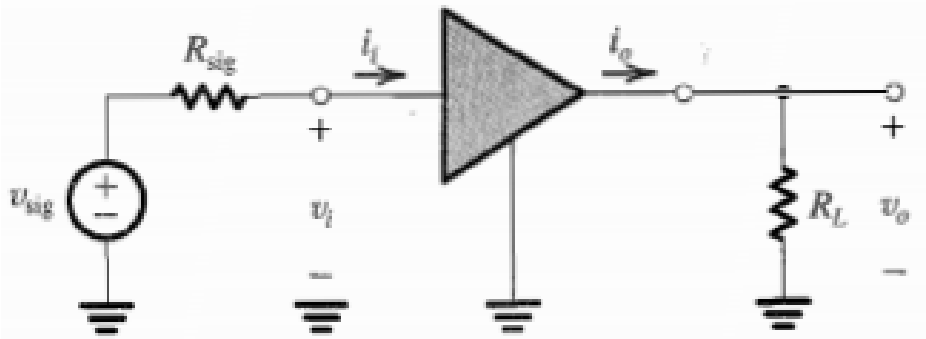

- Input resistance with no load:

$$R_i \equiv \left.\frac{v_i}{i_i}\right|_{R_L=\infty}$$

- Output resistance of amplifier proper:

$$R_o = \left.\frac{v_x}{i_x}\right|_{v_i=0}$$

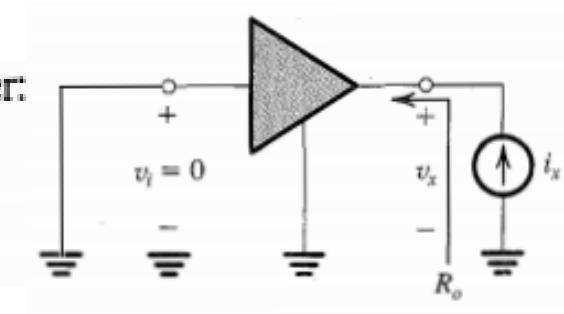

- Open-circuit voltage gain:

$$A_{vo} \equiv \left.\frac{v_o}{v_i}\right|_{R_L=\infty}$$

- Short-circuit current gain:

$$A_{is} \equiv \left.\frac{i_o}{i_i}\right|_{R_L=0}$$

Amplifier Impedance

- Drain to Source (Output impedance)

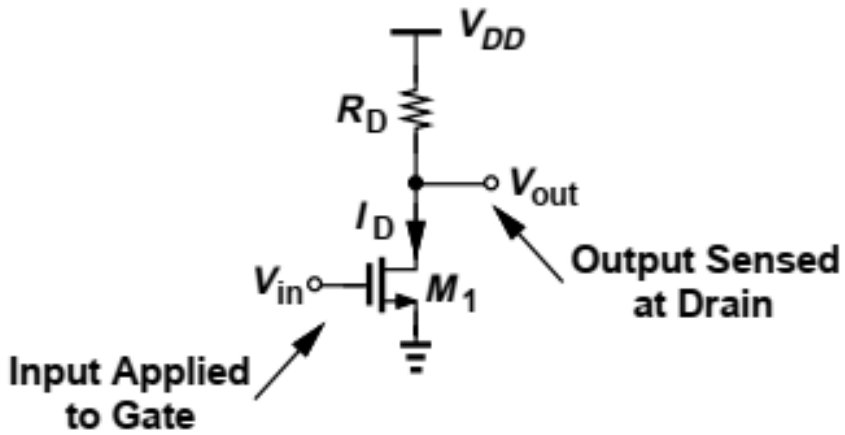

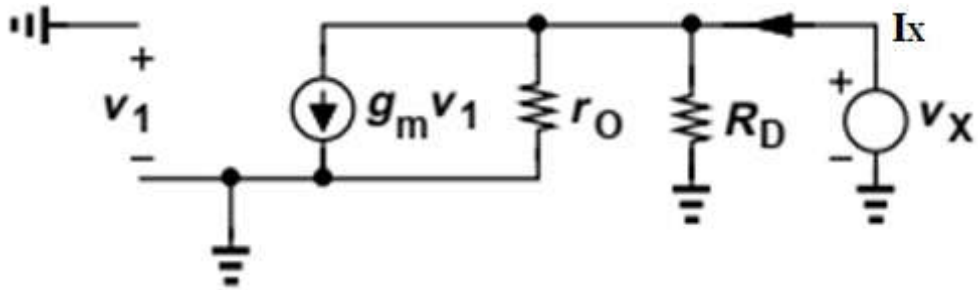

$$R_{out} = R_D || r_O.$$

Amplifier Impedance

- Input impedance

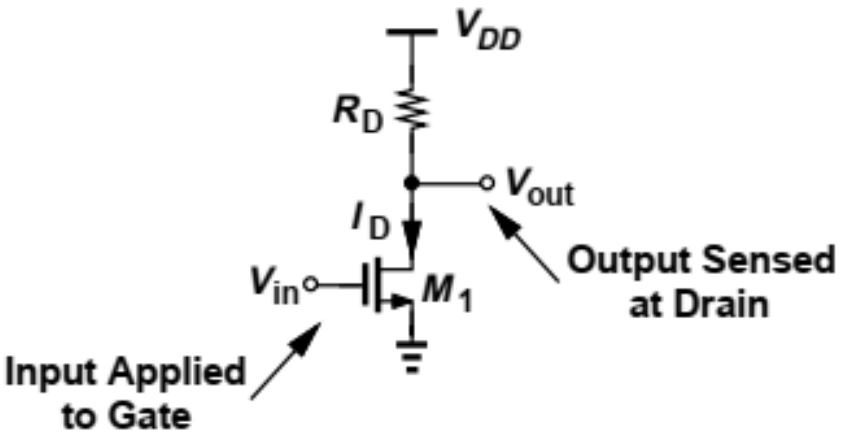

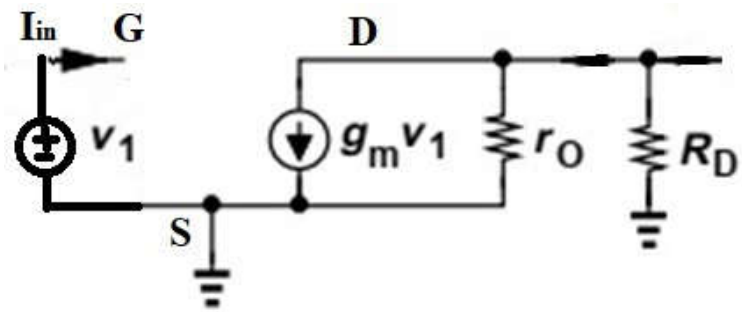

$R_{in} = V_1/I_{in}$

$$R_{in} = \infty$$

Impedance from source

$I_1 = g_m v_1 + v_1 / r_o$

$R_1 = 1/g_m \parallel r_o$

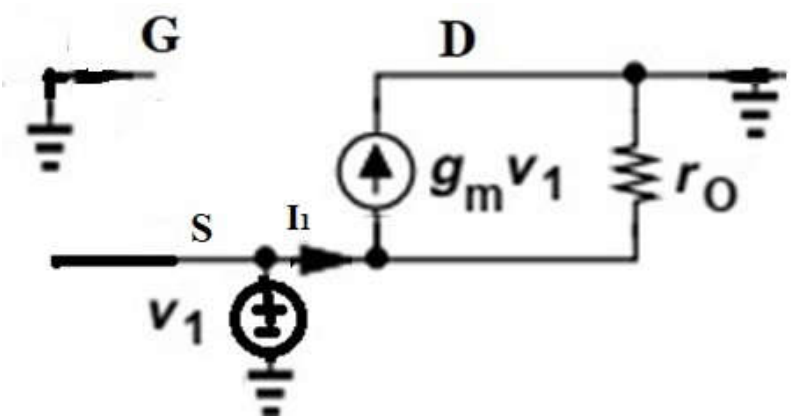

Amplifier voltage gain

- Consider a small change in signal and corresponding change in node voltages.
- Ignore the DC Biasing voltage or consider as AC virtual ground.
- Transistor denotes the transfer of resistance.

$$\text{Gain} = \frac{Impdence\ from\ Drain\ end \times I_D}{Impdence\ from\ Source\ end \times I_S}$$

$$\text{Gain} = \frac{Impdence\ from\ Drain\ end\ (output) to\ ground}{Impdence\ from\ Source\ end\ (ground) to\ input}$$

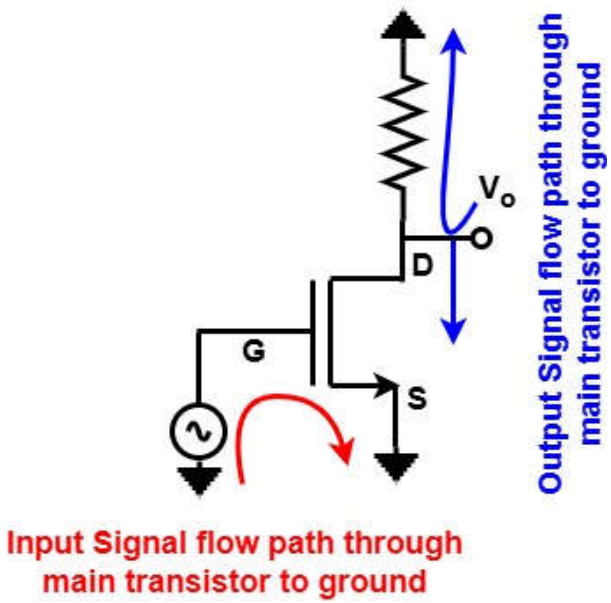

MOSFET impedance

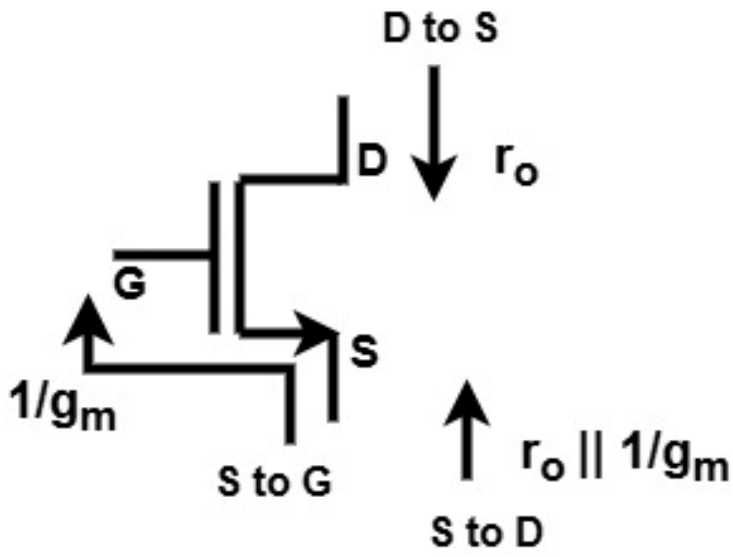

n-MOSFET

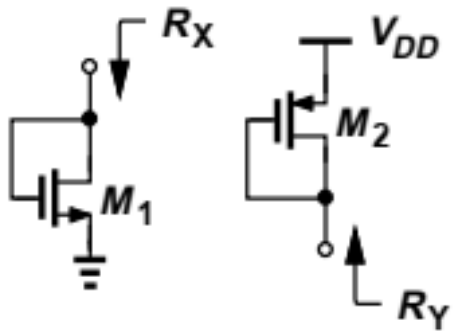

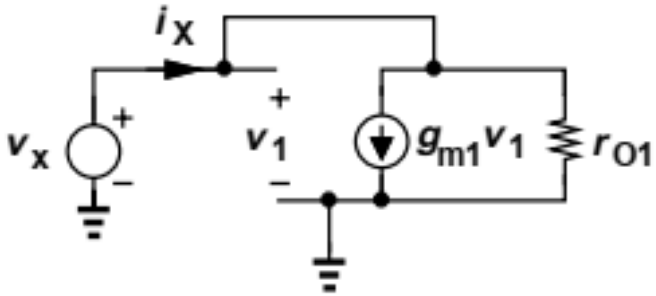

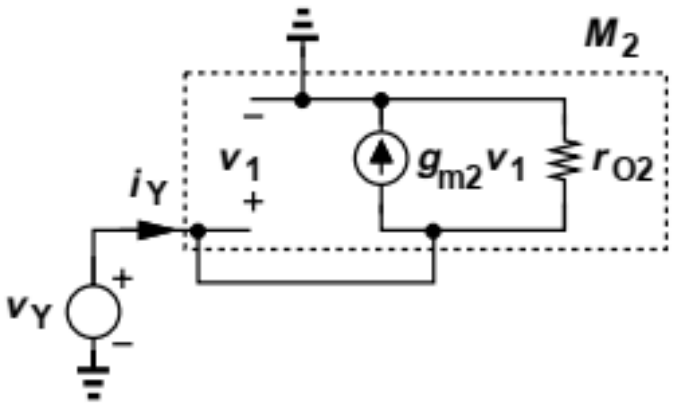

$$R_X = \frac{1}{g_{m1}} \| r_{O1}$$

$$R_Y = \frac{v_Y}{i_Y} = \frac{1}{g_{m2}} \| r_{O2}$$

Voltage amplifier examples

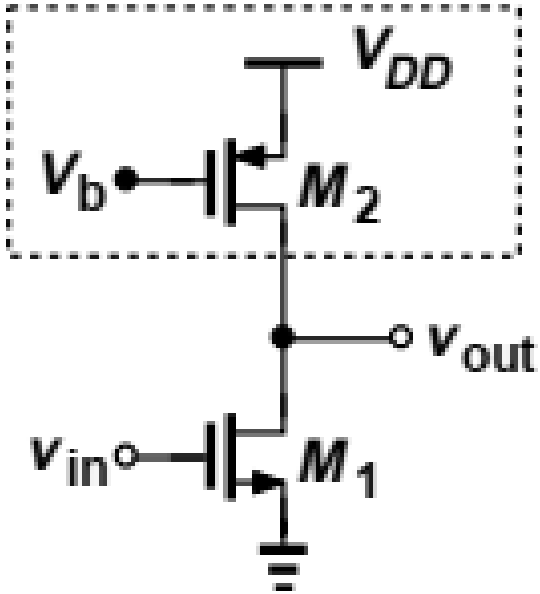

Voltage amplifier examples

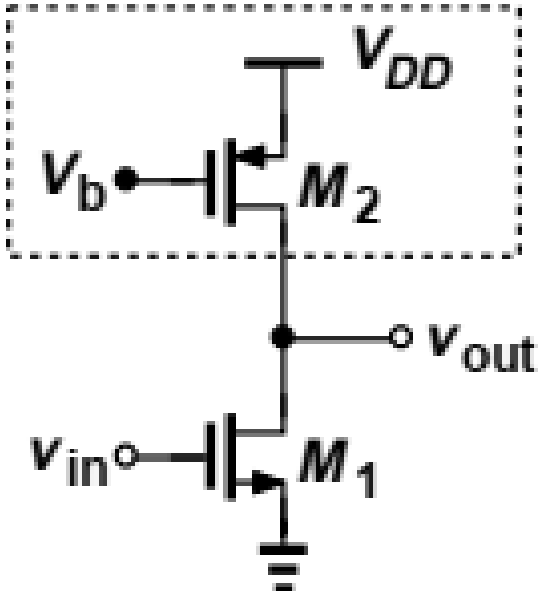

$$A_v = -\frac{(r_{o1} \,||\, r_{o2})}{\frac{1}{g_{m1}}}$$

$$A_v = -g_{m1}(r_{O1} \,||\, r_{O2})$$

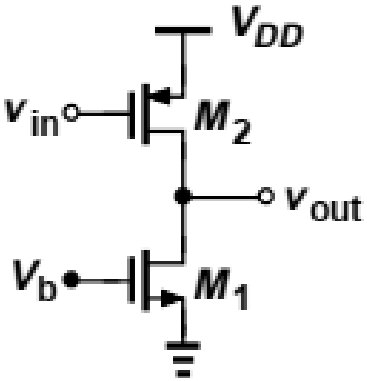
V_{DD}
v_{in}
M_2
v_{out}
V_b
M_1

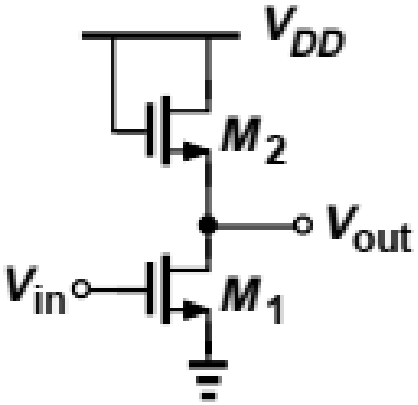
V_{DD}
M_2
V_{out}
V_{in}
M_1

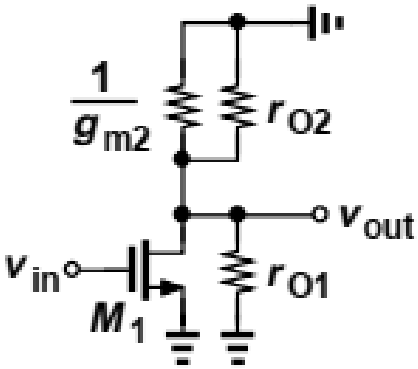
$\frac{1}{g_{m2}}$
r_{O2}
v_{out}
v_{in}
r_{O1}
M_1

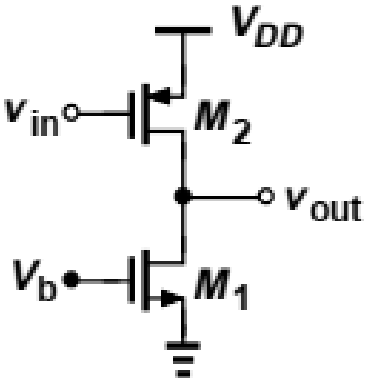

$$A_v = -g_{m2}(r_{O1}||r_{O2})$$

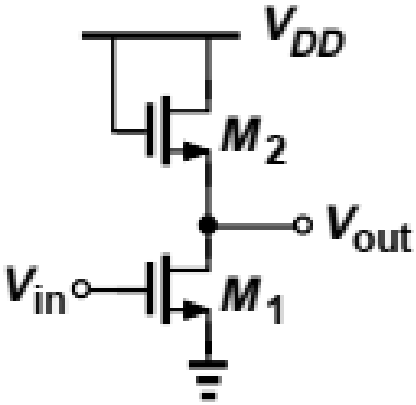

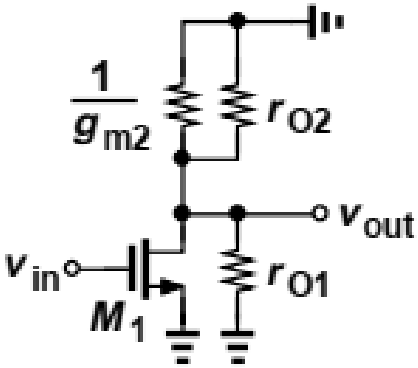

$$A_v = -g_{m1}\left(\frac{1}{g_{m2}}||r_{O2}||r_{O1}\right)$$

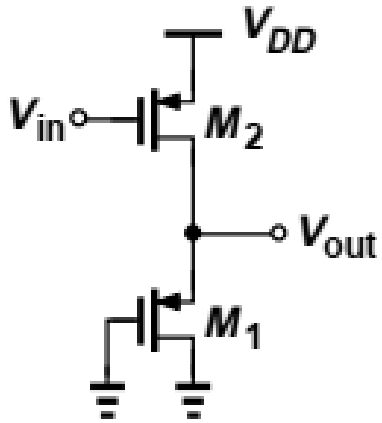

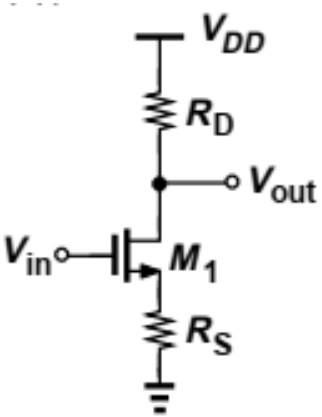

$\lambda = 0$

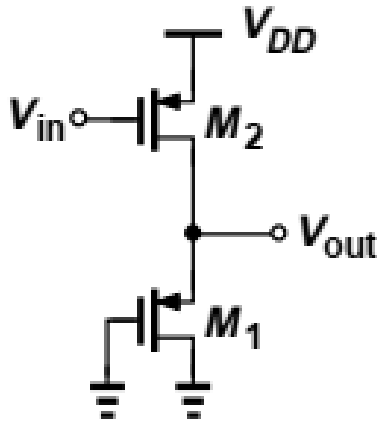

$$A_v = -g_{m2}\left(\frac{1}{g_{m1}}||r_{O1}||r_{O2}\right)$$

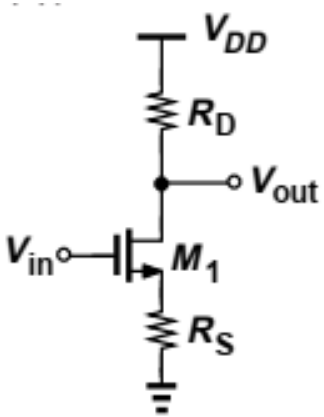

λ = 0

$$\frac{v_{out}}{v_{in}} = -\frac{g_m R_D}{1 + g_m R_S}$$

$$= -\frac{R_D}{\frac{1}{g_m} + R_S},$$

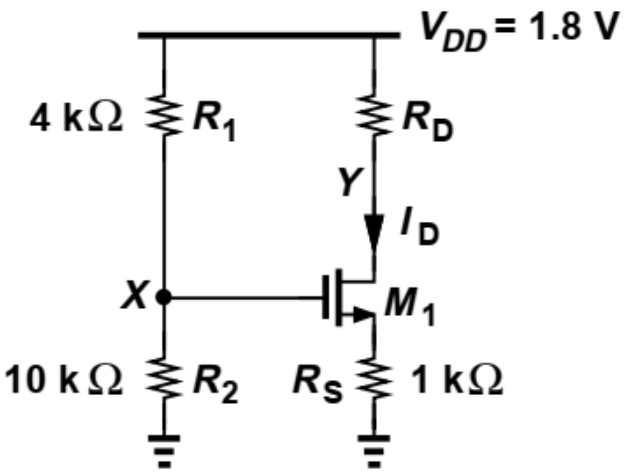
V_{DD} = 1.8 V
4 kΩ
R_1
R_D
Y
I_D
X
M_1
10 kΩ
R_2
R_S
1 kΩ

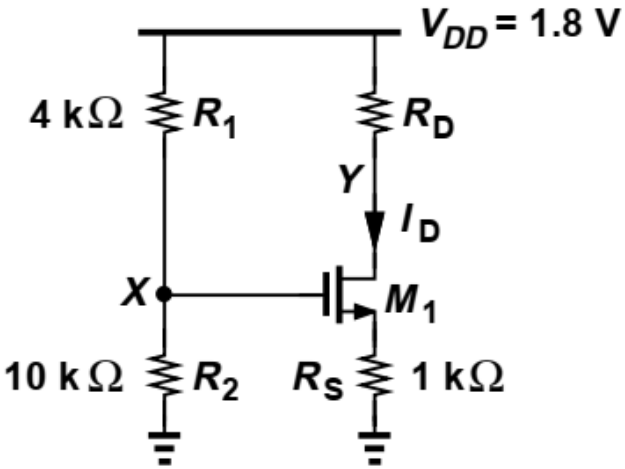

$$V_X = \frac{R_2}{R_1 + R_2} V_{DD}$$

Since $V_X = V_{GS} + I_D R_S$,

$$\frac{R_2}{R_1 + R_2} V_{DD} = V_{GS} + I_D R_S.$$

Also,

$$I_D = \frac{1}{2} \mu_n C_{ox} \frac{W}{L} (V_{GS} - V_{TH})^2.$$

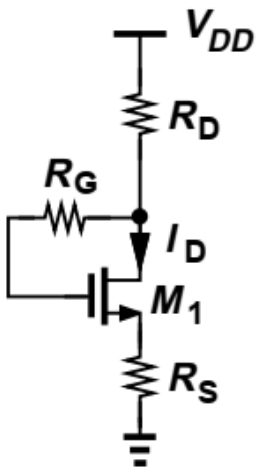
V_{DD}
R_D
R_G
I_D
M_1
R_S

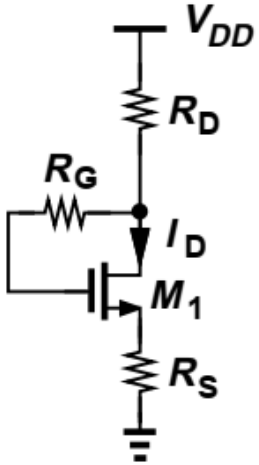

$$I_D R_D + V_{GS} + R_S I_D = V_{DD}$$

$$I_D = \frac{1}{2}\mu_n C_{ox}\frac{W}{L}[V_{DD} - (R_S + R_D)I_D - V_{TH}]^2$$

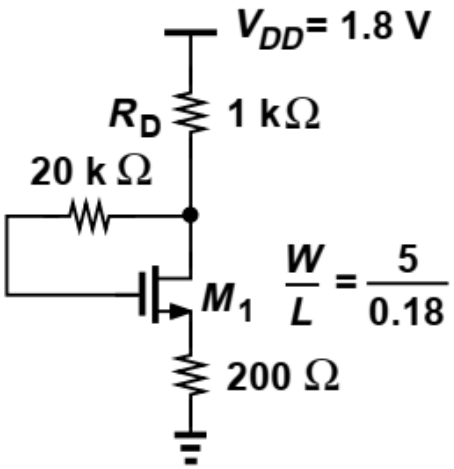
V_{DD}= 1.8 V
R_D
1 kΩ
20 k Ω
M_1
$\frac{W}{L} = \frac{5}{0.18}$
200 Ω

Current Source

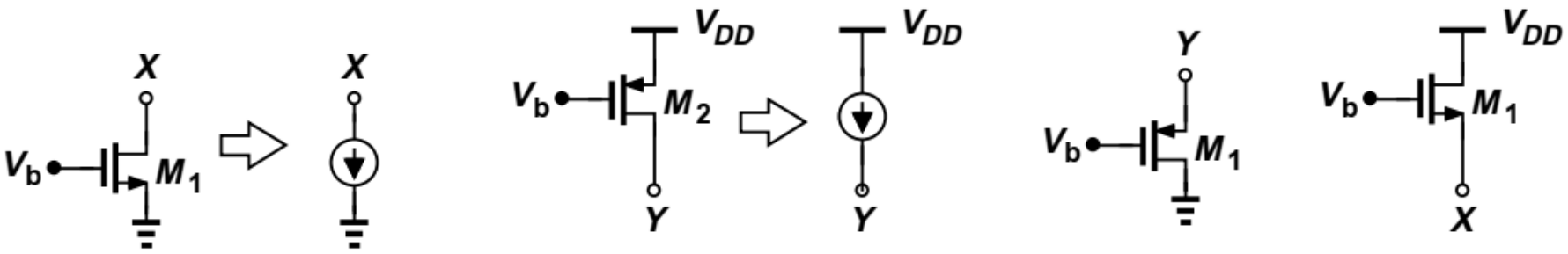

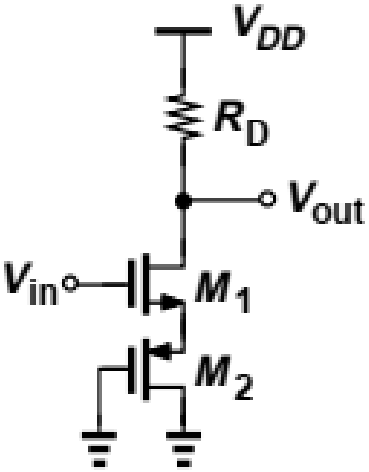

$\lambda = 0$

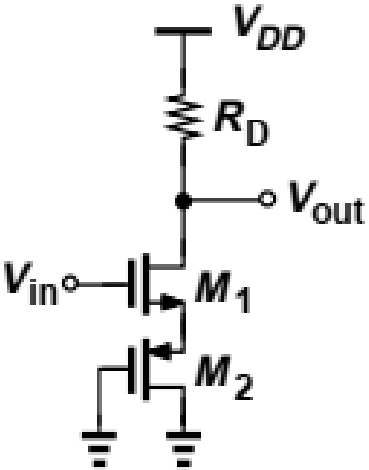

λ = 0

$$A_v = -\frac{R_D}{\frac{1}{g_{m1}} + \frac{1}{g_{m2}}}$$

Cascode connection

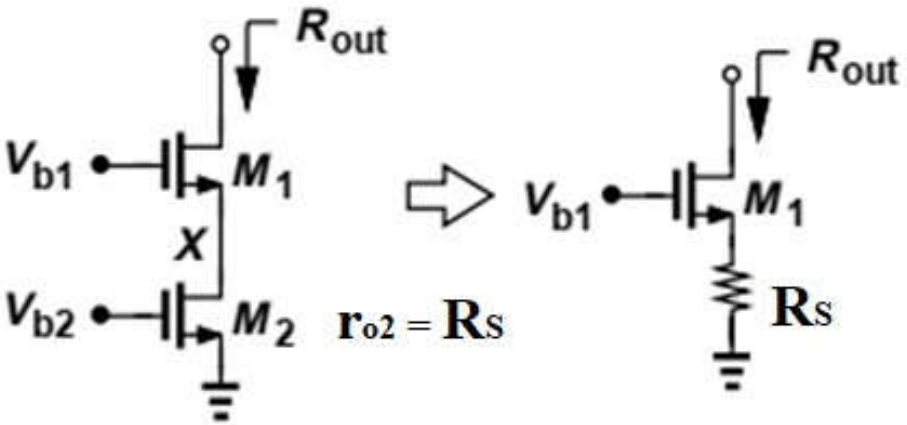

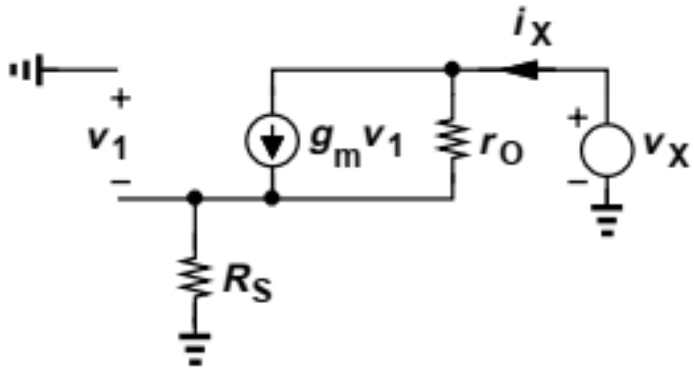

Cascode connection

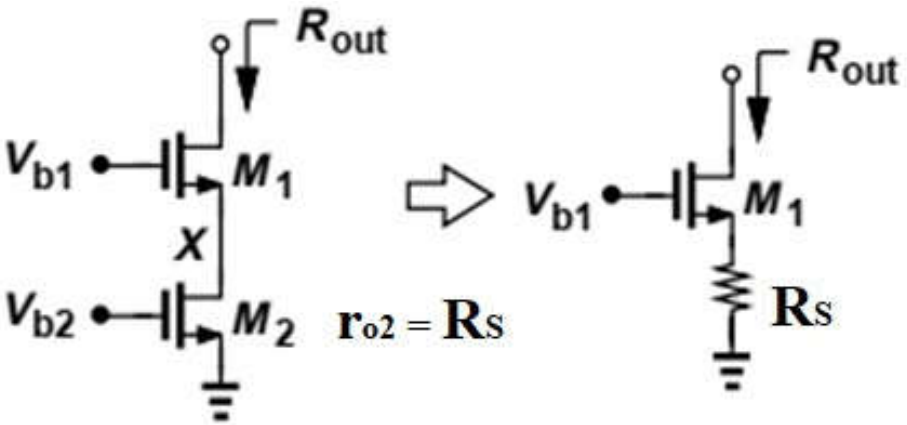

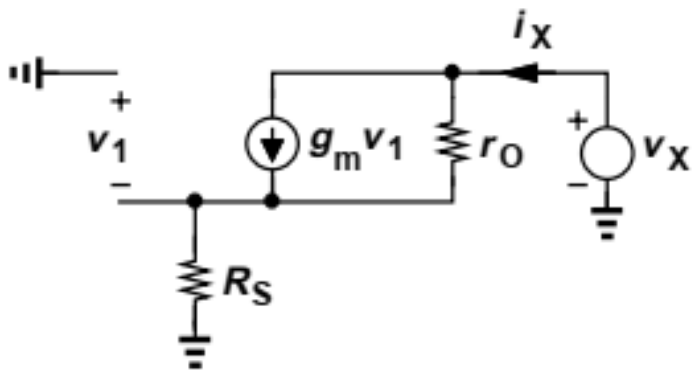

$$v_1 = -i_X R_S.$$

Current through r_o =
$= i_X - g_m V_1 = i_X - g_m(-i_X R_S) =$
$= i_X + g_m i_X R_S$

Cascode connection

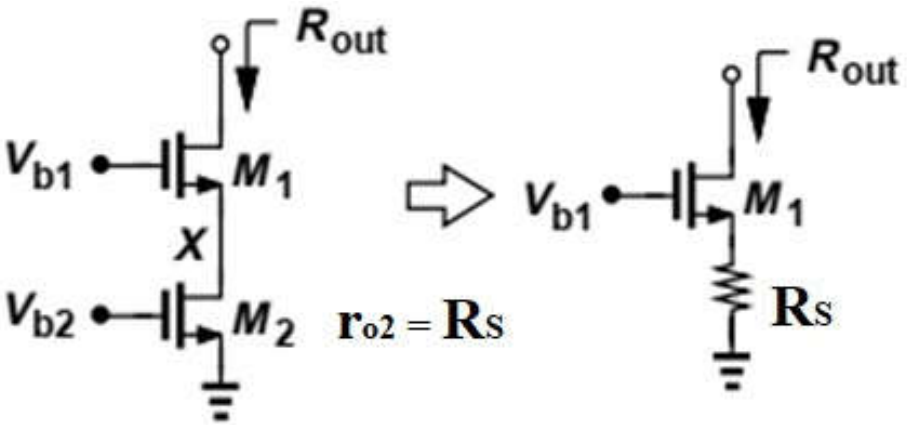

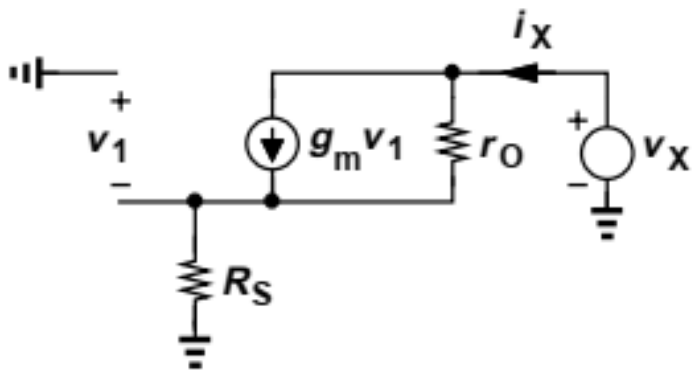

$$v_1 = -i_X R_S.$$

$$r_O(i_X + g_m i_X R_S) + i_X R_S = v_X$$

$$\frac{v_X}{i_X} = r_O(1 + g_m R_S) + R_S$$
$$= (1 + g_m r_O)R_S + r_O$$
$$\approx g_m r_O R_S + r_O.$$

Current through r_o =
= $i_X - g_m V_1 = i_X - g_m(-i_X R_S)$ =
= $i_X + g_m i_X R_S$

Cascode connection

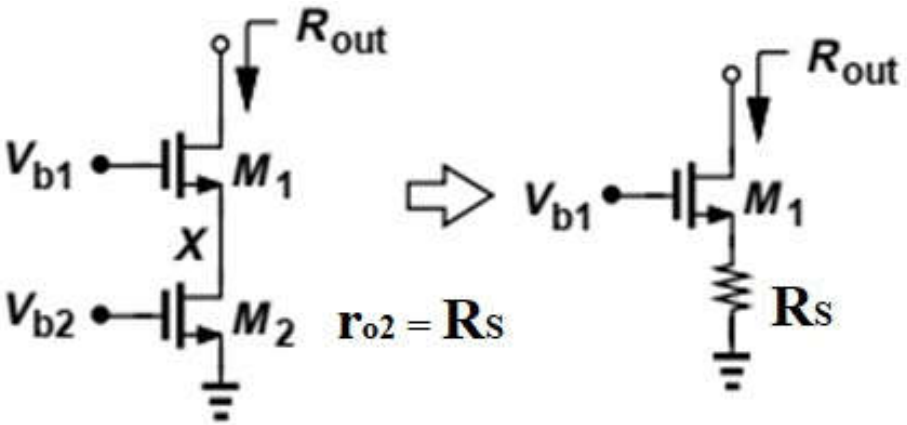

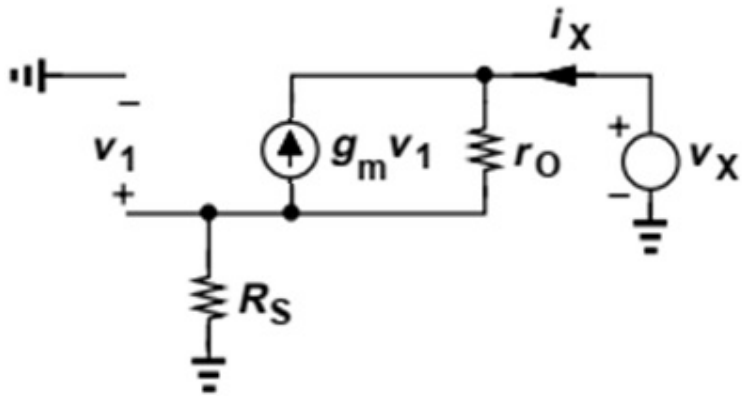

$$i_x = -g_m V_1 + \frac{(V_X - V_1)}{r_o}$$

$$V_1 = i_X R_S$$

$$i_x = -g_m\, i_X R_S + \frac{(V_X - i_X R_S)}{r_o}$$

$$\frac{V_X}{i_X} = r_{o1} + R_S + g_m r_{o1} R_S = g_m r_{o1} R_S$$

$$\frac{V_1}{V_X} \approx \frac{i_X R_S}{i_X g_m r_{o1} R_S} \approx \frac{1}{g_m r_{o1}}$$

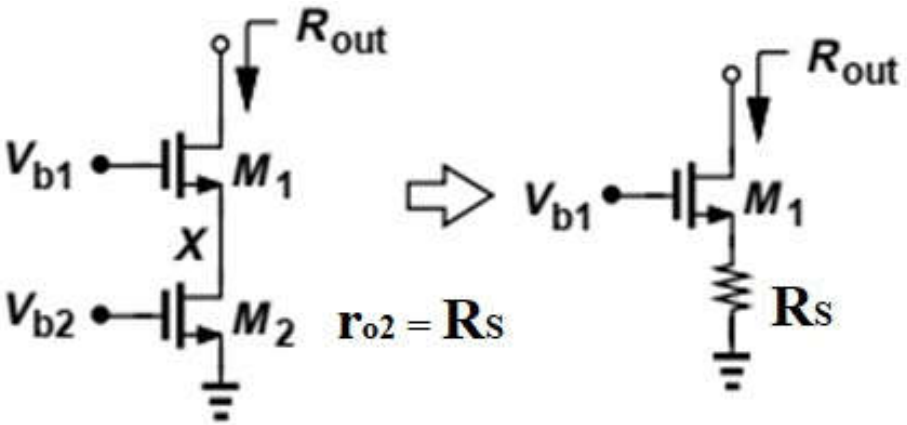

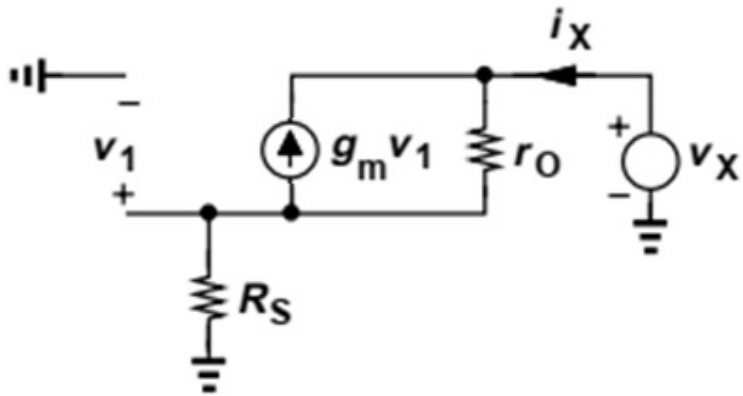

$$\frac{V_1}{V_X} \approx \frac{i_X R_S}{i_X g_m r_{o1} R_S} \approx \frac{1}{g_m r_{o1}}$$

The MOSFET M_2 has less impact of change in V_X, and therefore, can be replace as current source

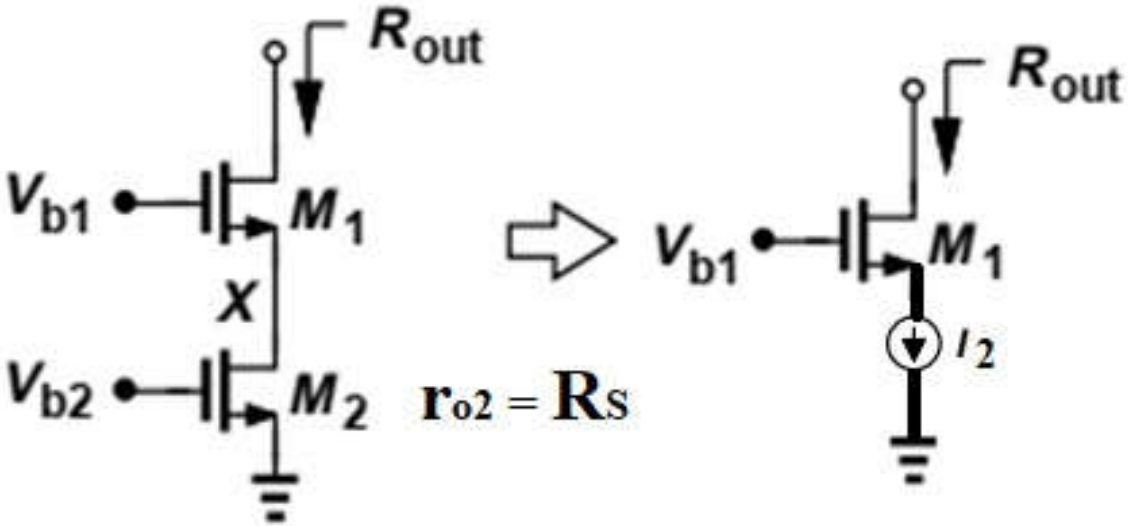
R_{out}
V_{b1}
M_1
X
V_{b2}
M_2
$r_{o2} = R_S$
R_{out}
V_{b1}
M_1
I_2

CMOS Cascode Amplifier

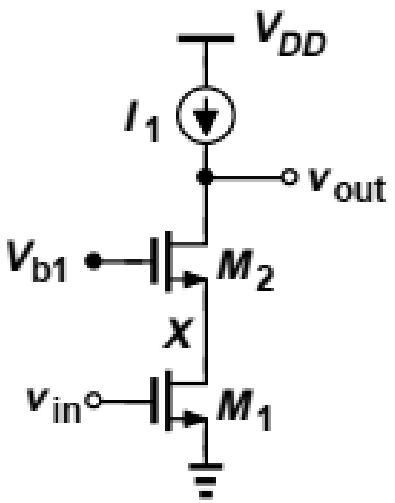

$$A_v = -G_m R_{out}$$
$$\approx -g_{m1}[(1 + g_{m2} r_{O2}) r_{O1} + r_{O2}]$$
$$\approx -g_{m1} r_{O1} g_{m2} r_{O2}.$$

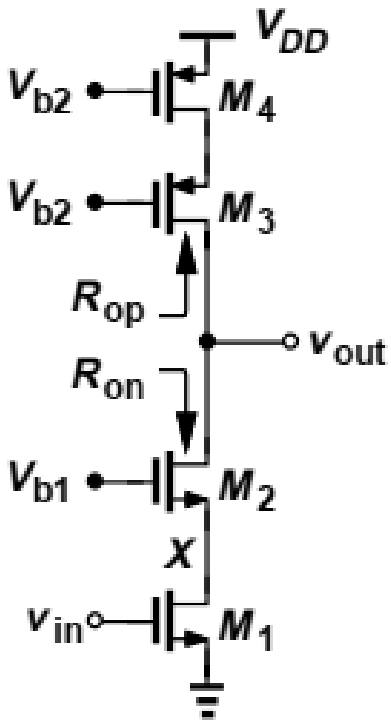

$$A_v \approx -g_{m1}[(g_{m2} r_{O2} r_{O1}) || (g_{m3} r_{O3} r_{O4})]$$

CS Stage With Degeneration

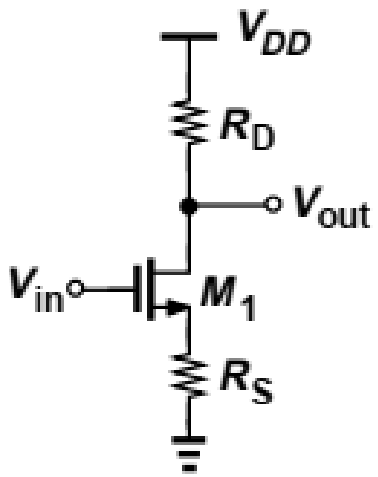

λ = 0

$$\frac{v_{out}}{v_{in}} = -\frac{R_D}{\frac{1}{g_m} + R_S},$$

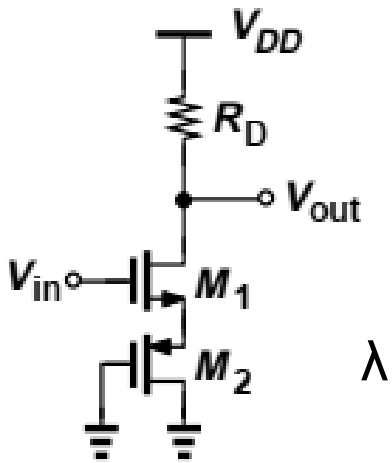

λ = 0

$$A_v = -\frac{R_D}{\frac{1}{g_{m1}} + \frac{1}{g_{m2}}}$$

CS with Biasing and bypass capacitance

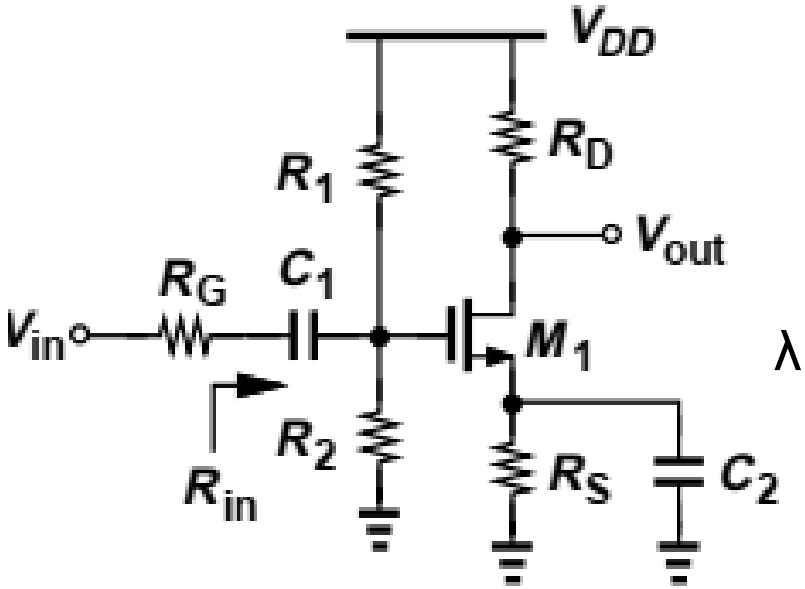

$\lambda = 0$

CS with Biasing and bypass capacitance

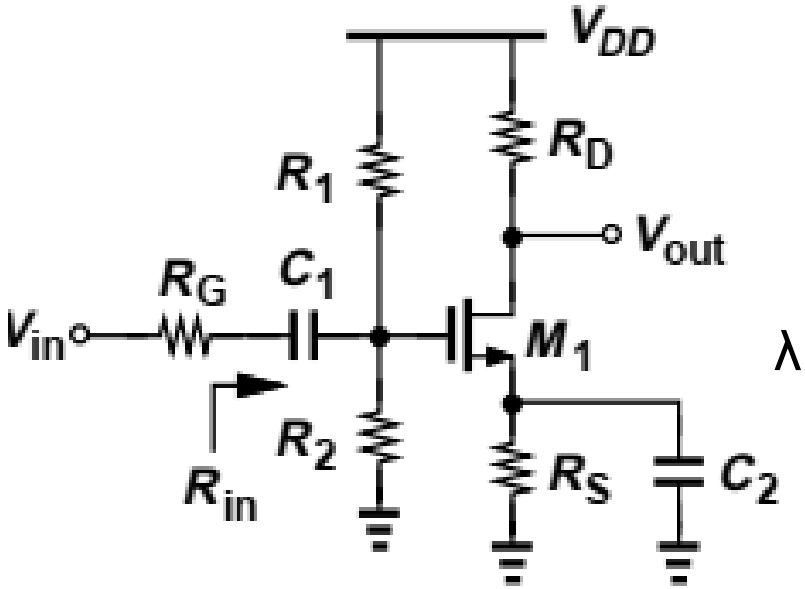

λ = 0

$$A_v = -\frac{R_1 || R_2}{R_G + R_1 || R_2} g_m R_D$$

Common Gate Topology (1st approach)

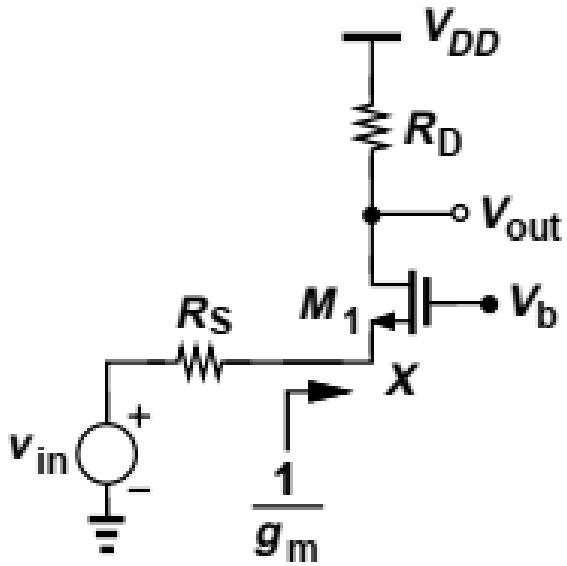

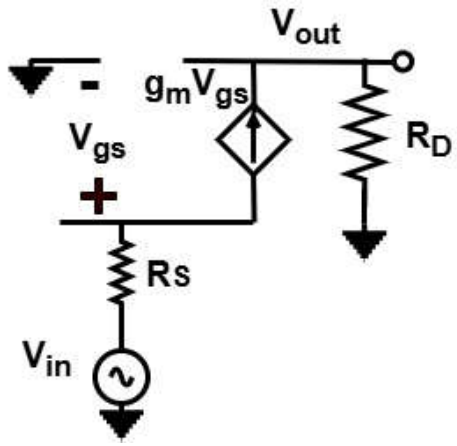

$$V_{in} = g_m V_{gs} R_S + V_{gs}$$

$$V_{gs} = \frac{V_{in}}{1 + g_m R_S}$$

$$V_{out} = g_m V_{gs} R_D$$

$$V_{out} = g_m \frac{V_{in}}{1 + g_m R_S} R_D$$

$$\frac{V_{out}}{V_{in}} = \frac{g_m R_D}{1 + g_m R_S} = \frac{R_D}{R_S + \frac{1}{g_m}}$$

Common Gate Topology (2nd approach)

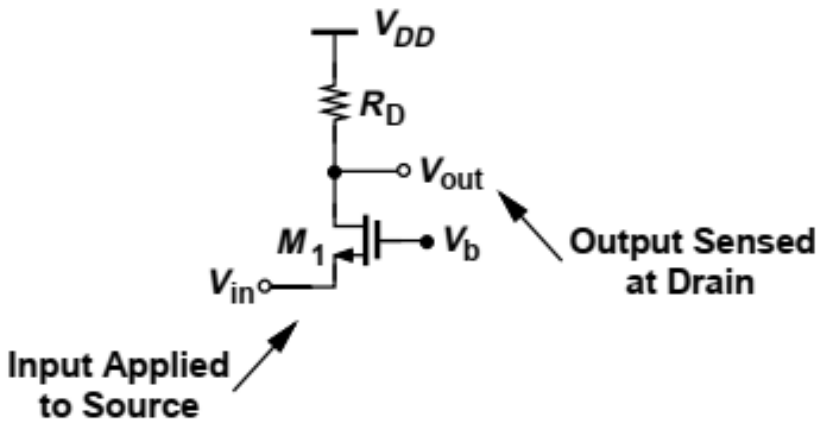

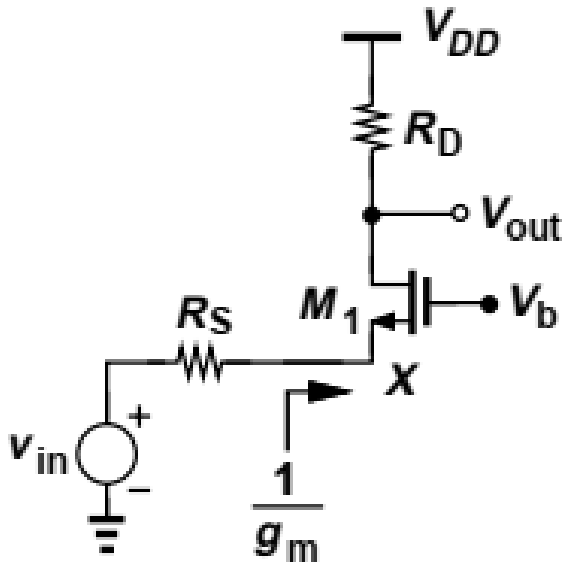

$$\frac{v_{out}}{v_{in}} = \frac{R_D}{\frac{1}{g_m} + R_S}$$

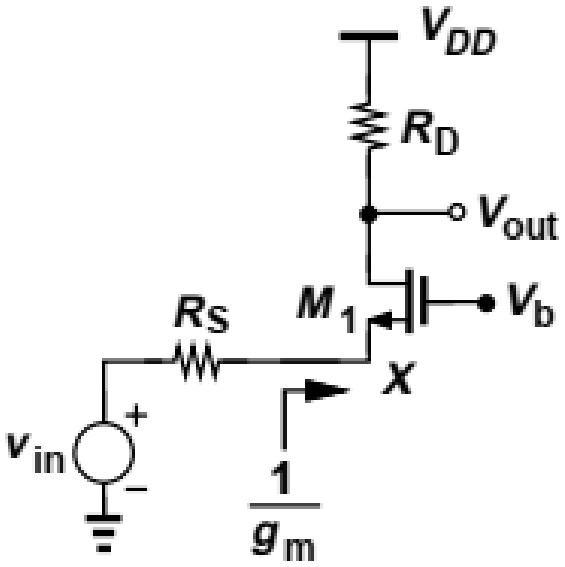

$$R_{out} = (1 + g_m r_O)R_S + r_O.$$

Common Drain Topology

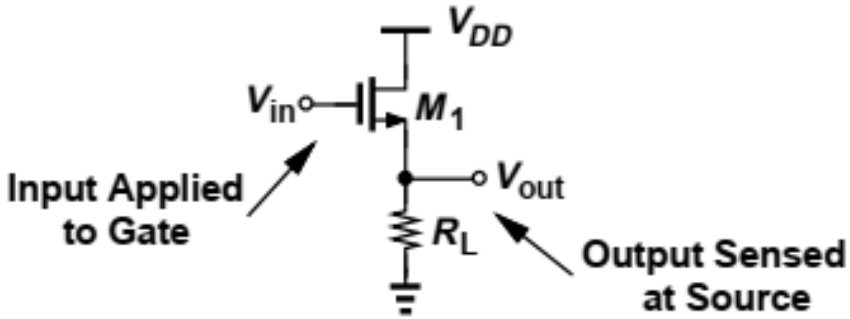

Small signal model = ?

Common Drain Topology

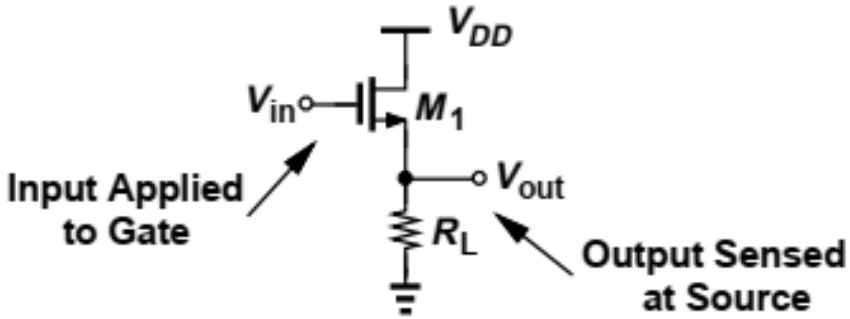

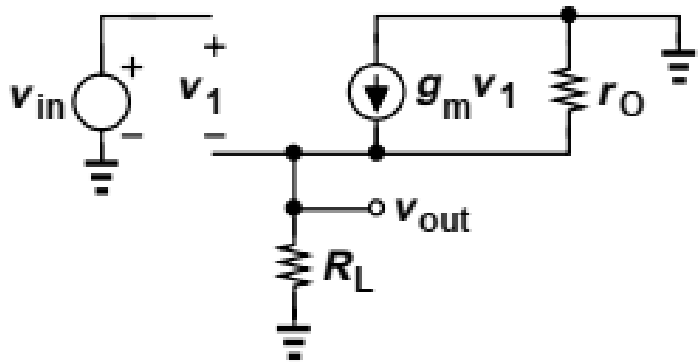

Gain = ?

Common Drain Topology

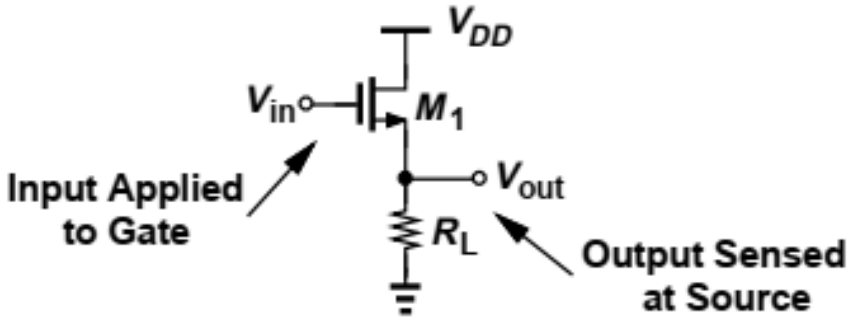

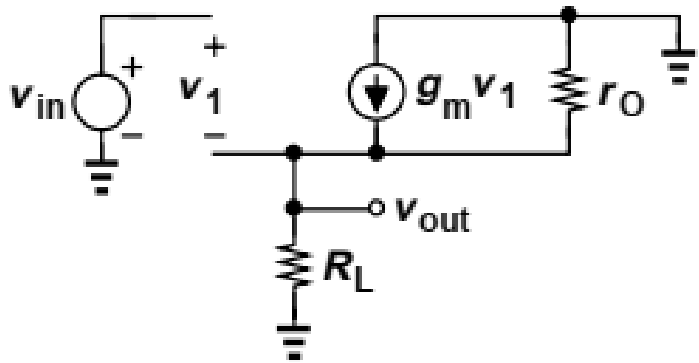

$$g_m v_1 (r_O || R_L) = v_{out}$$

$$v_{in} = v_1 + v_{out}$$

$$\frac{v_{out}}{v_{in}} = \frac{g_m(r_O||R_L)}{1 + g_m(r_O||R_L)}$$

$$= \frac{r_O||R_L}{\frac{1}{g_m} + r_O||R_L}.$$

Output impedance = ?

Common Drain Topology

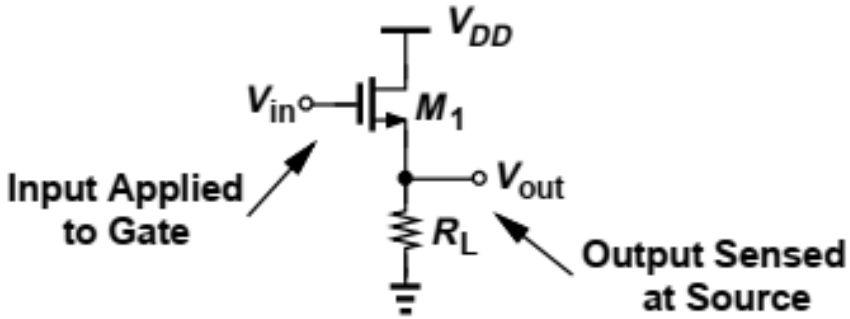

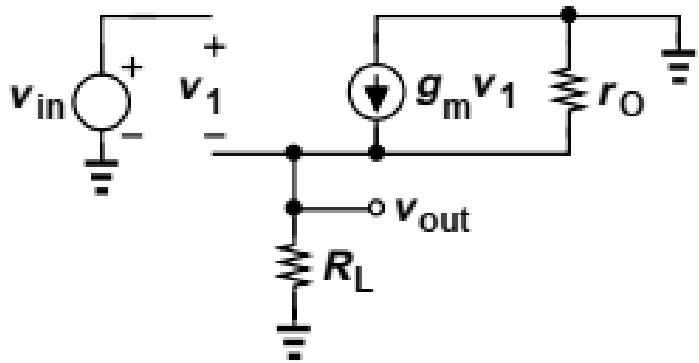

$$g_m v_1 (r_O || R_L) = v_{out}$$

$$v_{in} = v_1 + v_{out}$$

$$\frac{v_{out}}{v_{in}} = \frac{g_m(r_O||R_L)}{1 + g_m(r_O||R_L)} = \frac{r_O||R_L}{\frac{1}{g_m} + r_O||R_L}.$$

$$R_{out} = \frac{1}{g_m}||r_O||R_L$$

MOSFET Capacitance

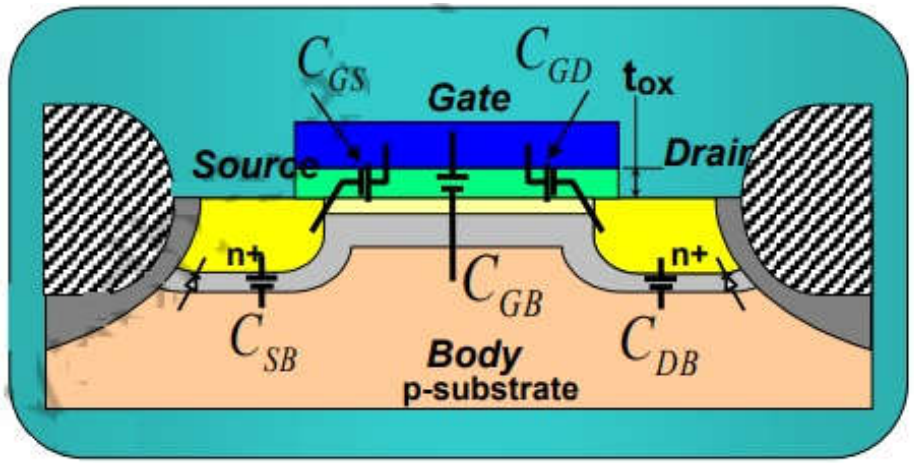

Linear Mode

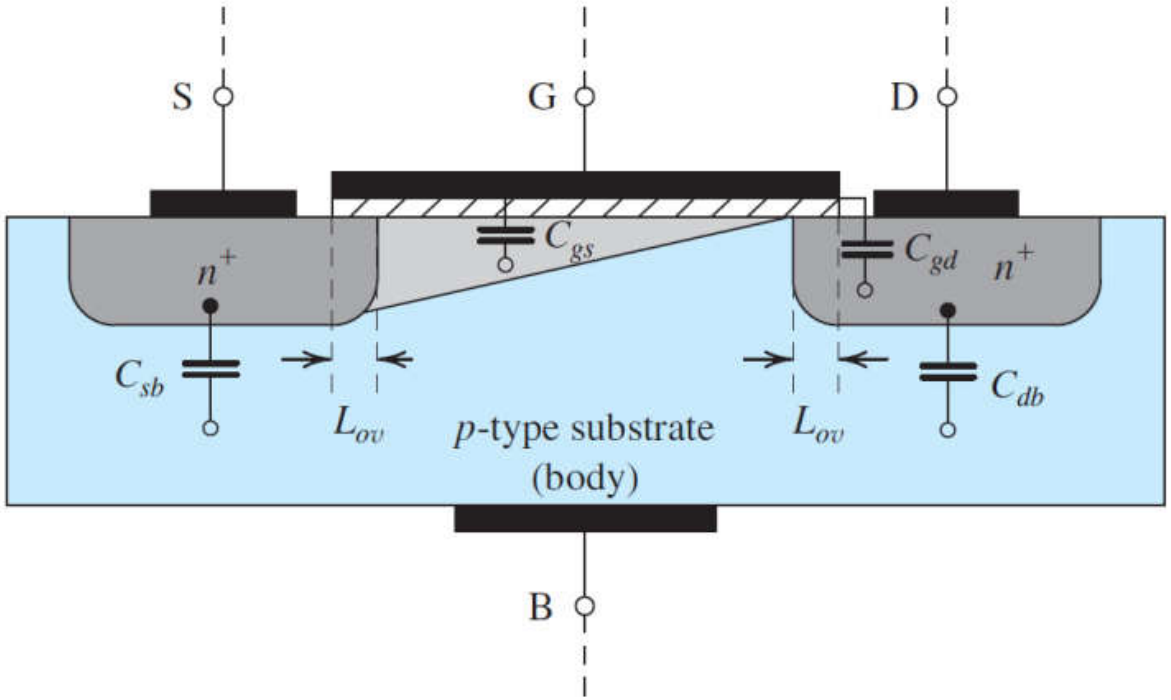

Saturation Mode

MOSFET Capacitance

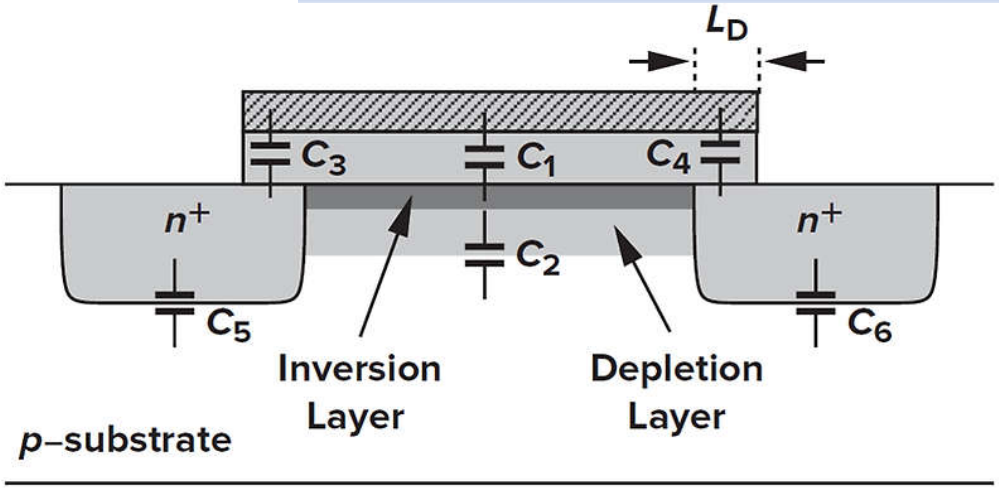

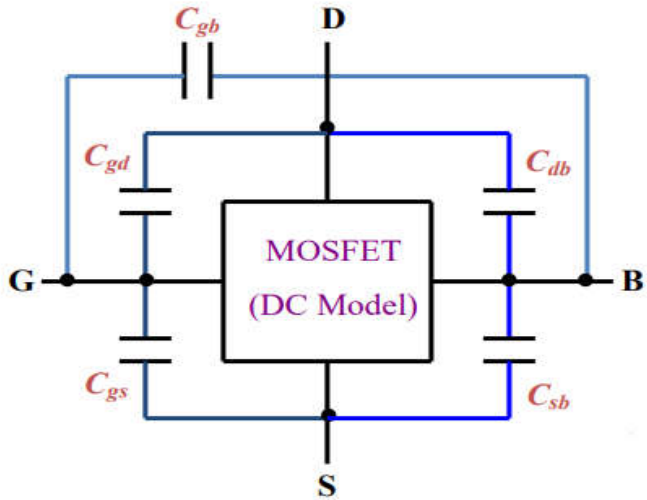

$$C_{eq} = C_1 \parallel C_2$$

C_1 is oxide capacitance.
C_2 is inversion capacitance and may be defined with C_{gs} and C_{gd}.
C_{gs} and C_{gd} are the major capacitance.

C_3, C_4 : Overlap Capacitance
C_5, C_6 (C_{sb} and C_{db}) : source/drain to body capacitance (C_{sb} and C_{db})
C_{gb}: comes into the picture before inversion

MOSFET Capacitance

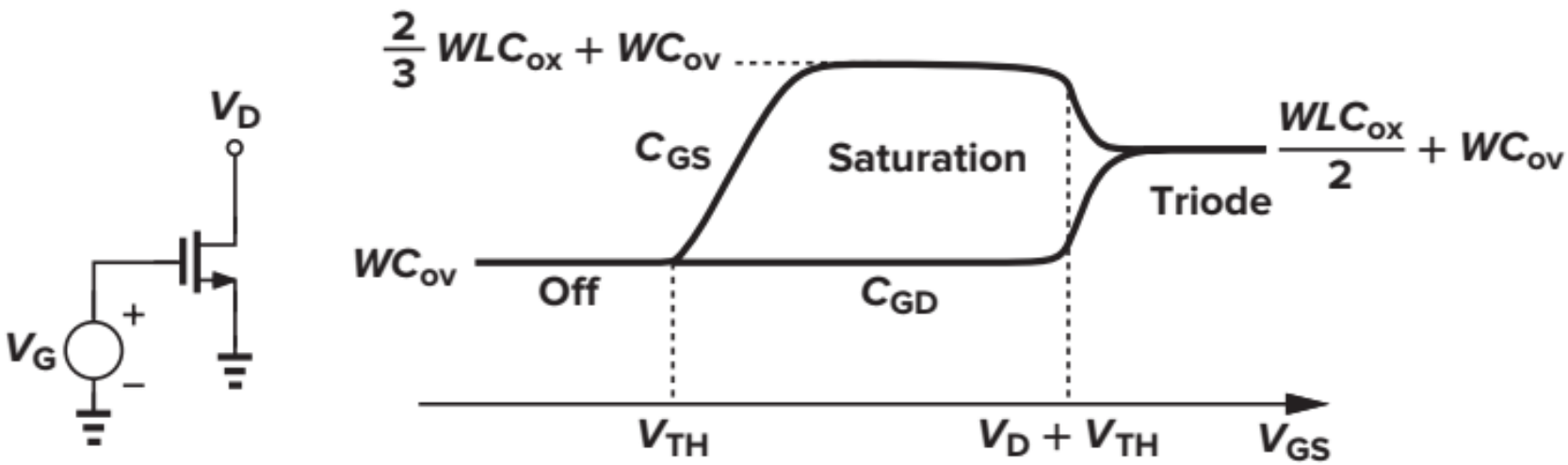

Capacitance

- I/O Coupling capacitance (At Input and Output node)
- By-pass Capacitance (Parallel with Emitter resistance)

At signal frequency of interest, the impedance of the capacitors is much smaller compared to the other circuit elements.

The capacitive reactance, given by $1/(2\pi fC)$, becomes negligible at the high signal frequencies typically used in small signal analysis.

There is quickly charging and discharging of the capacitance at signal frequency of interest.

Frequency response

- At high frequency

X_{Cin} (series capacitance) = $1/wC_{in}$; X_{cin} will be low and can be ignore

X_{Cout} (series capacitance) = $1/wC_{out}$; X_{cout} will be low and can be ignore

$X_{Cbypass}$ (paralle capacitance) = $1/wC_{bypass}$; X_{bypass} will be low and can be ignore the R_S.

C_{gs} and C_{gd} (parallel capacitance) are very small and provide a path from gate to drain and gate to source, can't be ignore.

- At low frequency

C_{gs} and C_{gd} (parallel capacitance) are very large and can be ignore.

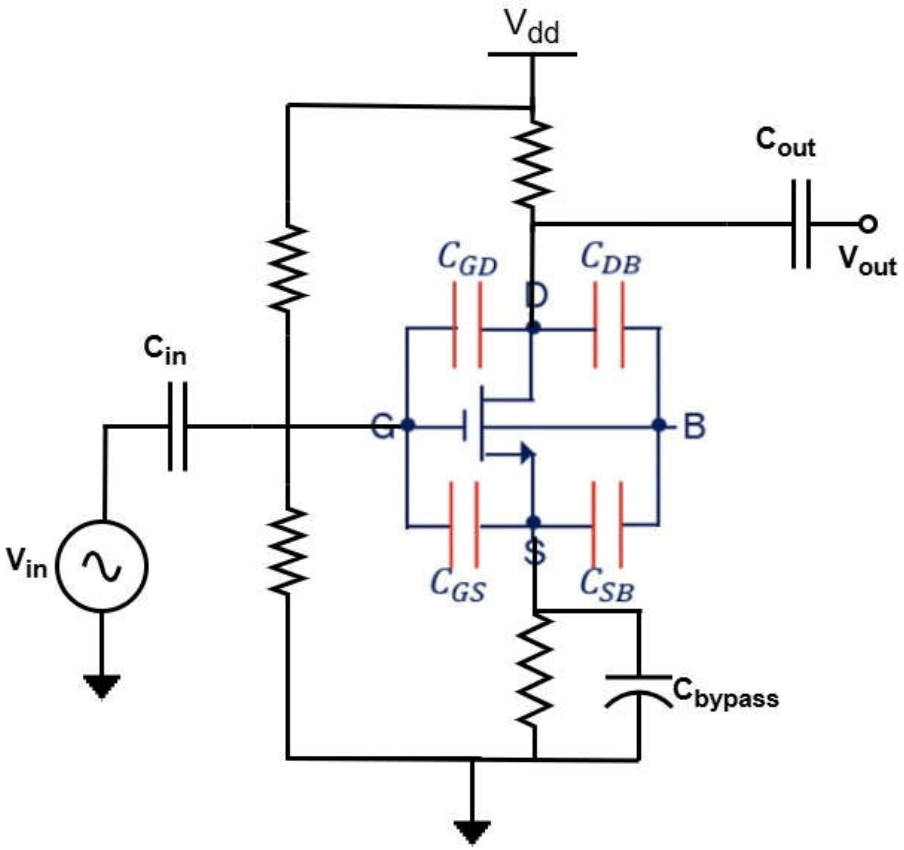

Frequency Response

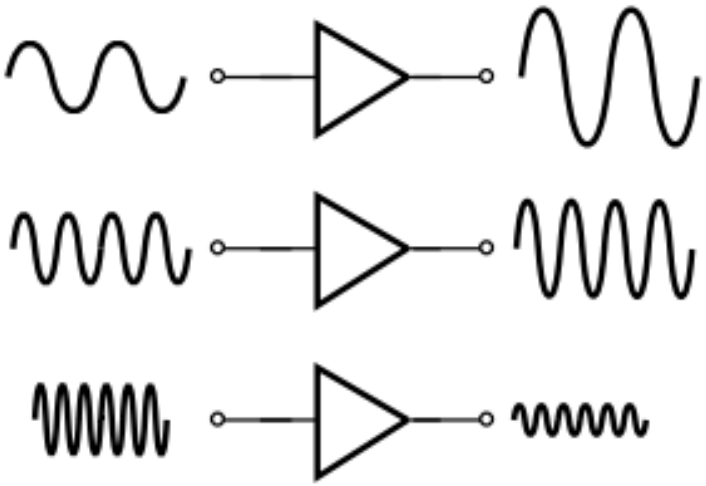

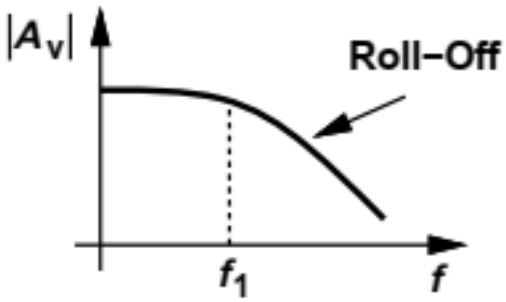

Observe the output while the input frequency is varied.
A high gain at low frequencies but a “roll-off” as the frequency increases.
To represent the circuit’s behavior at all frequencies of interest.
Call f_1 the useful bandwidth of the circuit.

Signal

- Audio signal

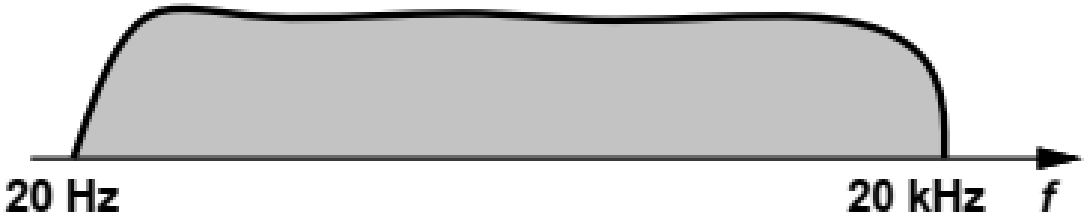

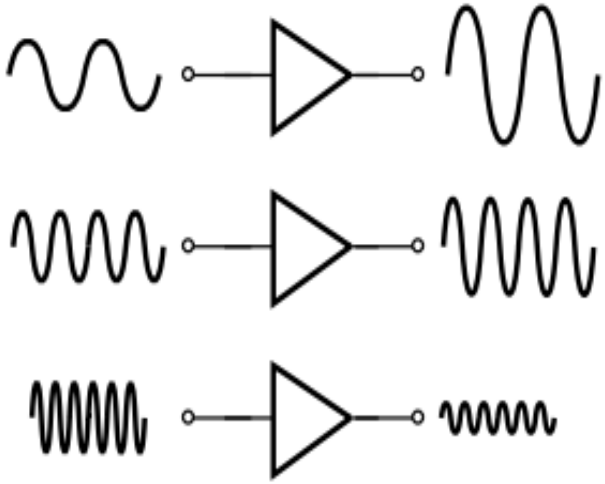

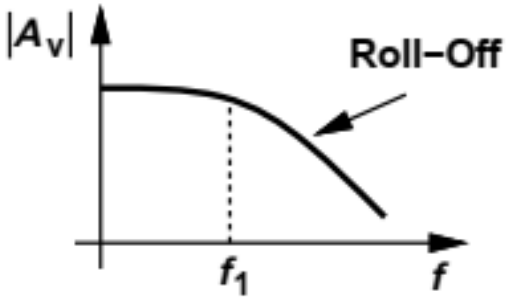
|Av|
Roll-Off
f1
f

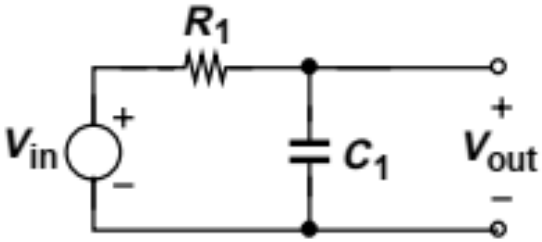
R1
Vin
+
−
C1
+
Vout
−

|Vout/Vin|
1.0
f

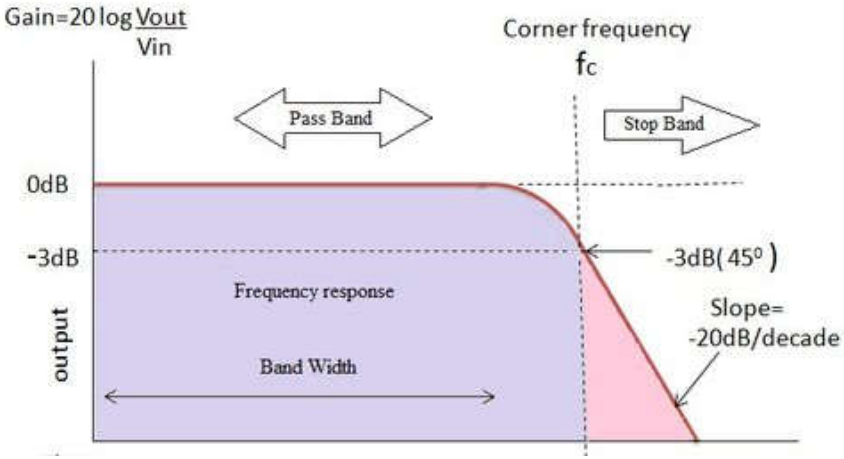
Gain=20 log Vout/Vin
Corner frequency
fc
Pass Band
Stop Band
0dB
-3dB
-3dB(45°)
Frequency response
Slope=
-20dB/decade
output
Band Width

Miller Theorem

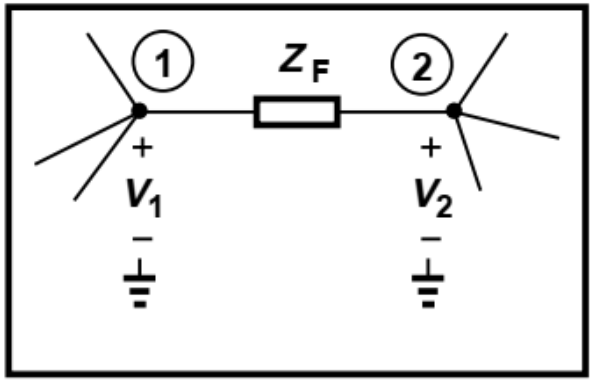

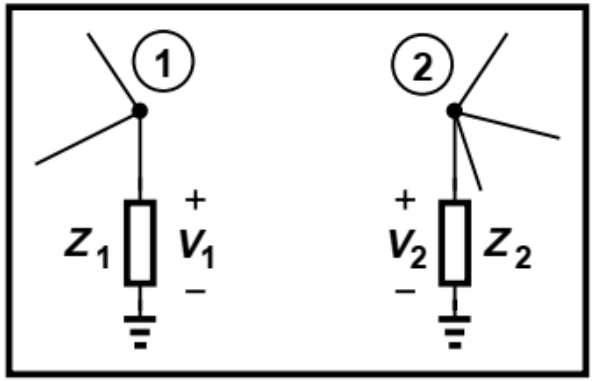

$$Z_1 = \frac{Z_F}{1 - A_v}$$

$$Z_2 = \frac{Z_F}{1 - \frac{1}{A_v}}$$

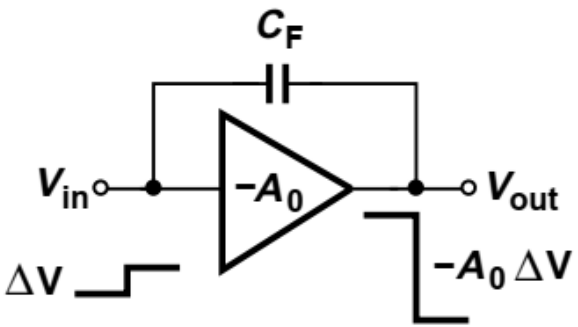

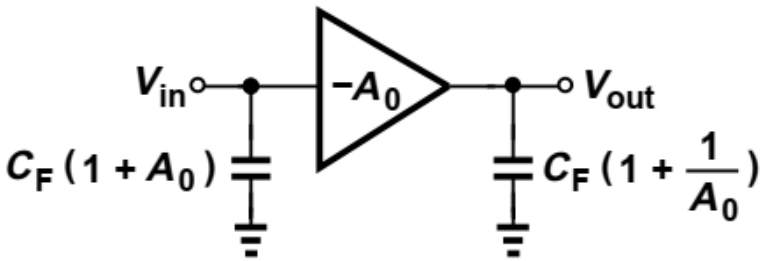

$$Z_1 = \frac{Z_F}{1 - A_v} = \frac{1}{(1 + A_0)C_F s}$$

$$Z_2 = \frac{Z_F}{1 - \frac{1}{A_v}} = \frac{1}{\left(1 + \frac{1}{A_0}\right) C_F s}$$

Frequency response

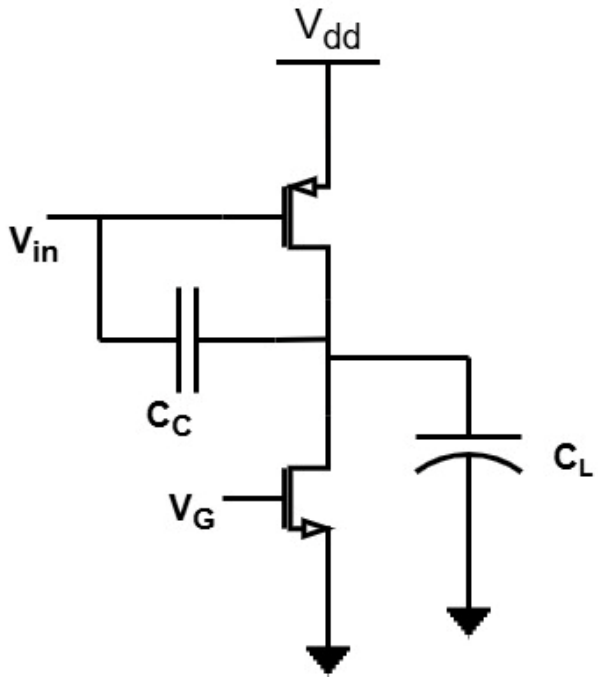

Frequency response

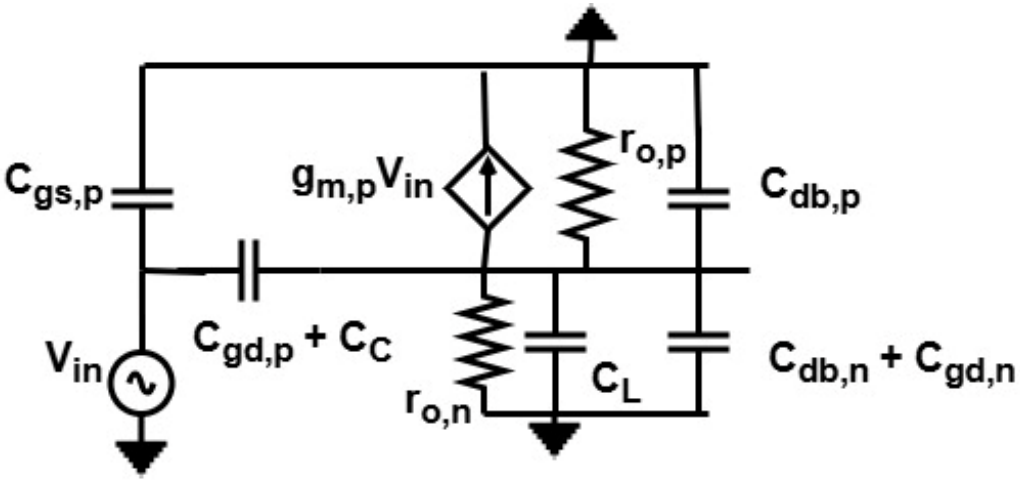

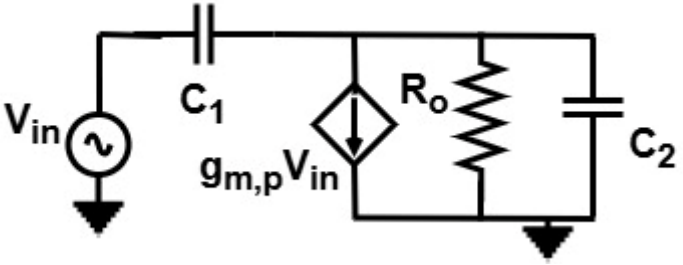

$C_1 = C_{gd,p} + C_C$

$C_2 = C_L + C_{db,p} + C_{db,n} + C_{gd,n}$

$R_o = r_{o,n} \parallel r_{o,p}$

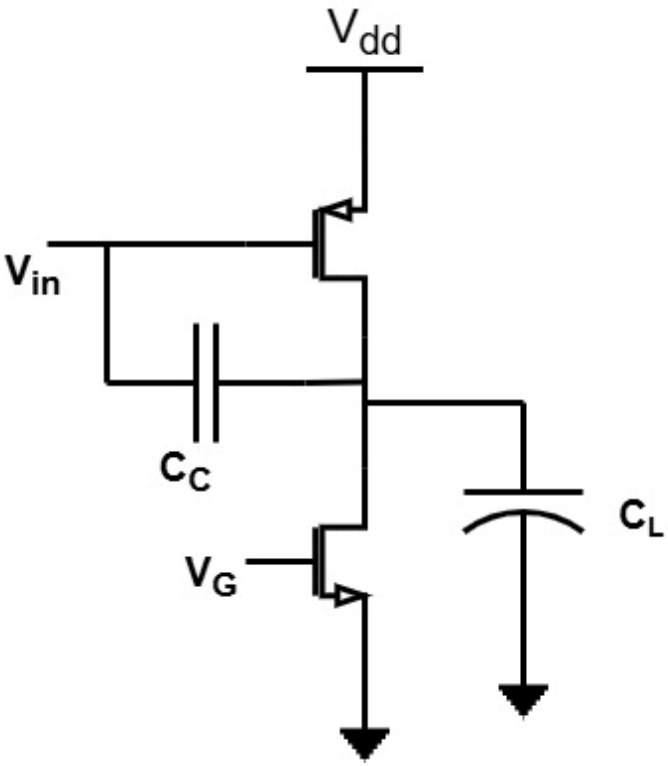

Frequency response

- The transfer function is a way to understand the response of a system to different inputs.
- The poles and zeros influence the system response quite strongly.

$$\frac{v_o}{v_{in}} = A_o \frac{\left(1-\frac{s}{z_1}\right)\left(1-\frac{s}{z_2}\right)\left(1-\frac{s}{z_3}\right)}{\left(1-\frac{s}{p_1}\right)\left(1-\frac{s}{p_2}\right)\left(1-\frac{s}{p_3}\right)}$$

Frequency response

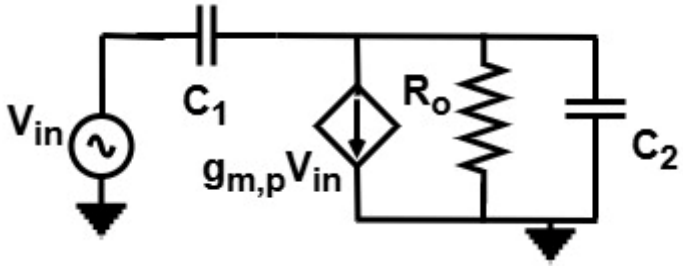

$C_1 = C_{gd,p} + C_C$

$C_2 = C_L + C_{db,p} + C_{db,n} + C_{gd,n}$

$R_o = r_{o,n} \parallel r_{o,p}$

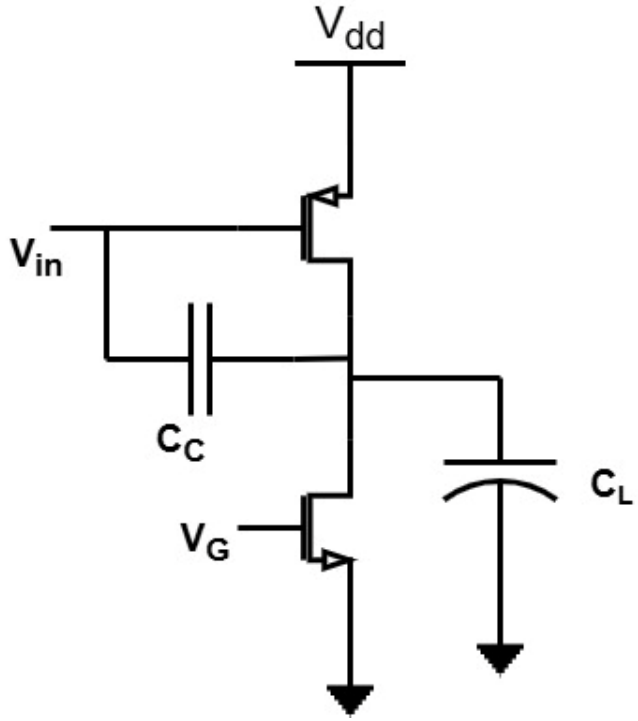

$$\frac{v_o}{v_{in}} = A_o \frac{\left(1-\frac{s}{z_1}\right)\left(1-\frac{s}{z_2}\right)\left(1-\frac{s}{z_3}\right)}{\left(1-\frac{s}{p_1}\right)\left(1-\frac{s}{p_2}\right)\left(1-\frac{s}{p_3}\right)}$$

$A_o = -g_{m,p}\,(r_{on} \parallel r_{op})$

$$p_1 = -\frac{1}{R_{eff}C_{eff}}$$

$$p_1 = -\frac{1}{R_o(C_1+C_2)}$$

Frequency response

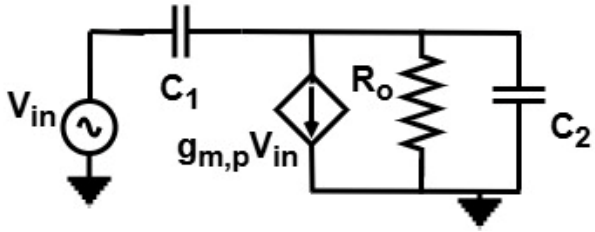

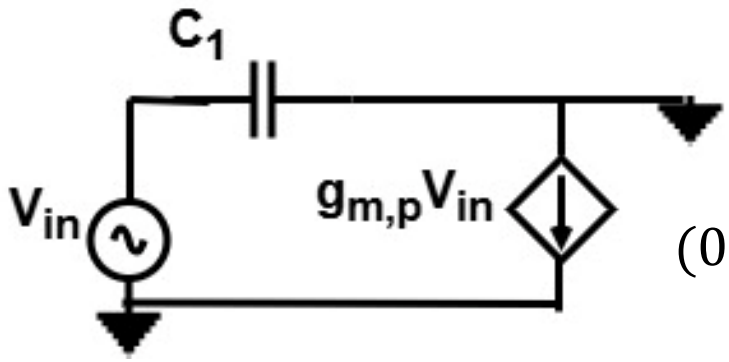

$$(0 - V_{in})s_{z1}C_1 + g_{m,p}V_{in} = 0$$

$$s_{z1} = \frac{g_{m,p}}{C_1}$$

$$\frac{v_o}{v_{in}} = -g_{m,p}\,(ron \parallel rop)\frac{\left(1 - \frac{s}{\frac{g_{m,p}}{C_1}}\right)}{\left(1 - \frac{s}{\left(-\frac{1}{R_o(C_1 + C_2)}\right)}\right)} = -g_{m,p}\,(ron \parallel rop)\frac{\left(1 - \frac{sC_1}{g_{m,p}}\right)}{\left(1 + sR_o(C_1 + C_2)\right)}$$