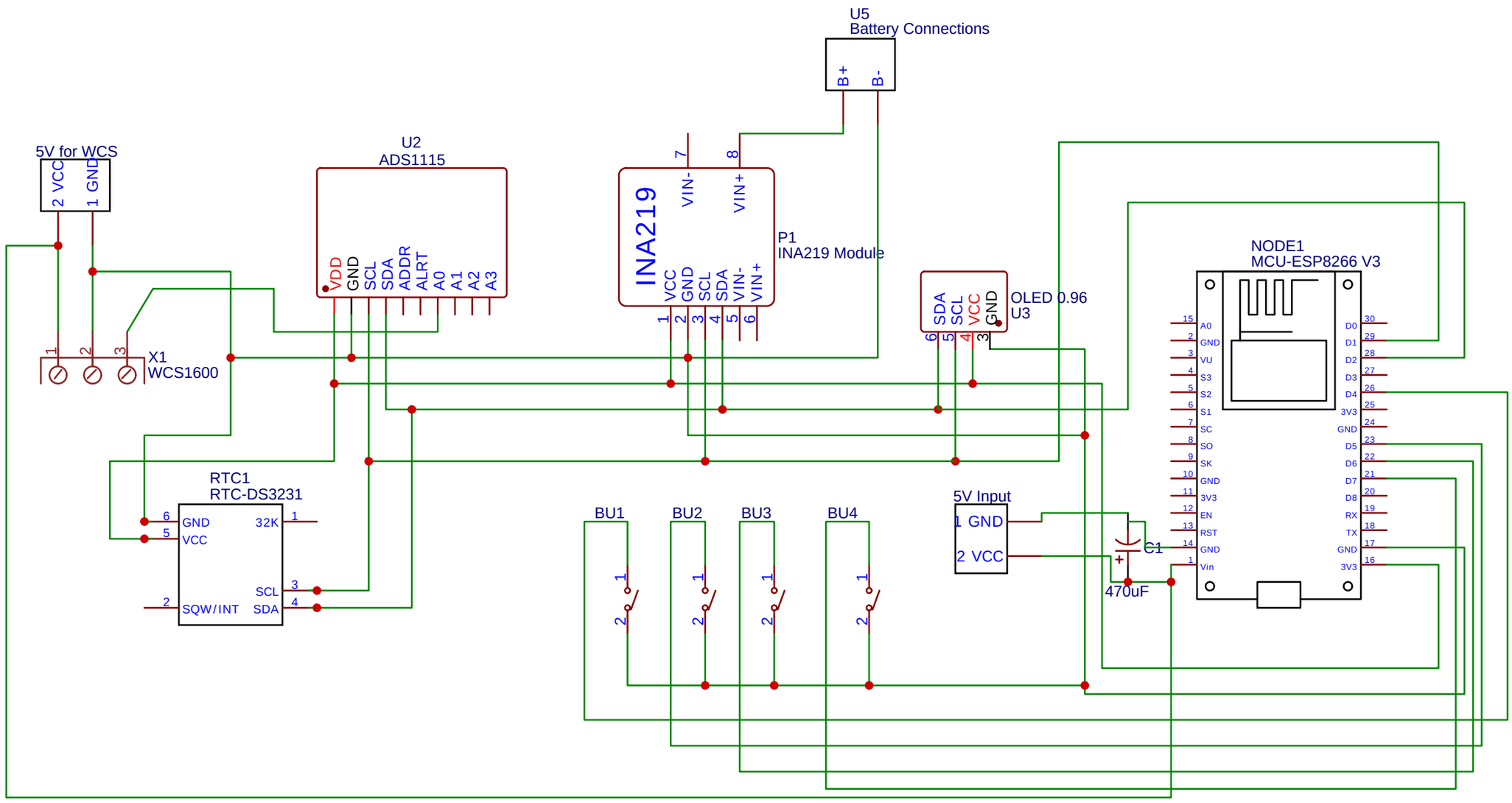

TITLE: Battery Monitor Schematic		REV: 1.0
EasyEDA	Company: Akshit Singh	Sheet: 1/1
	Date: 2025-07-22 Drawn By: akshitsingh658	