# LEFT SIDE

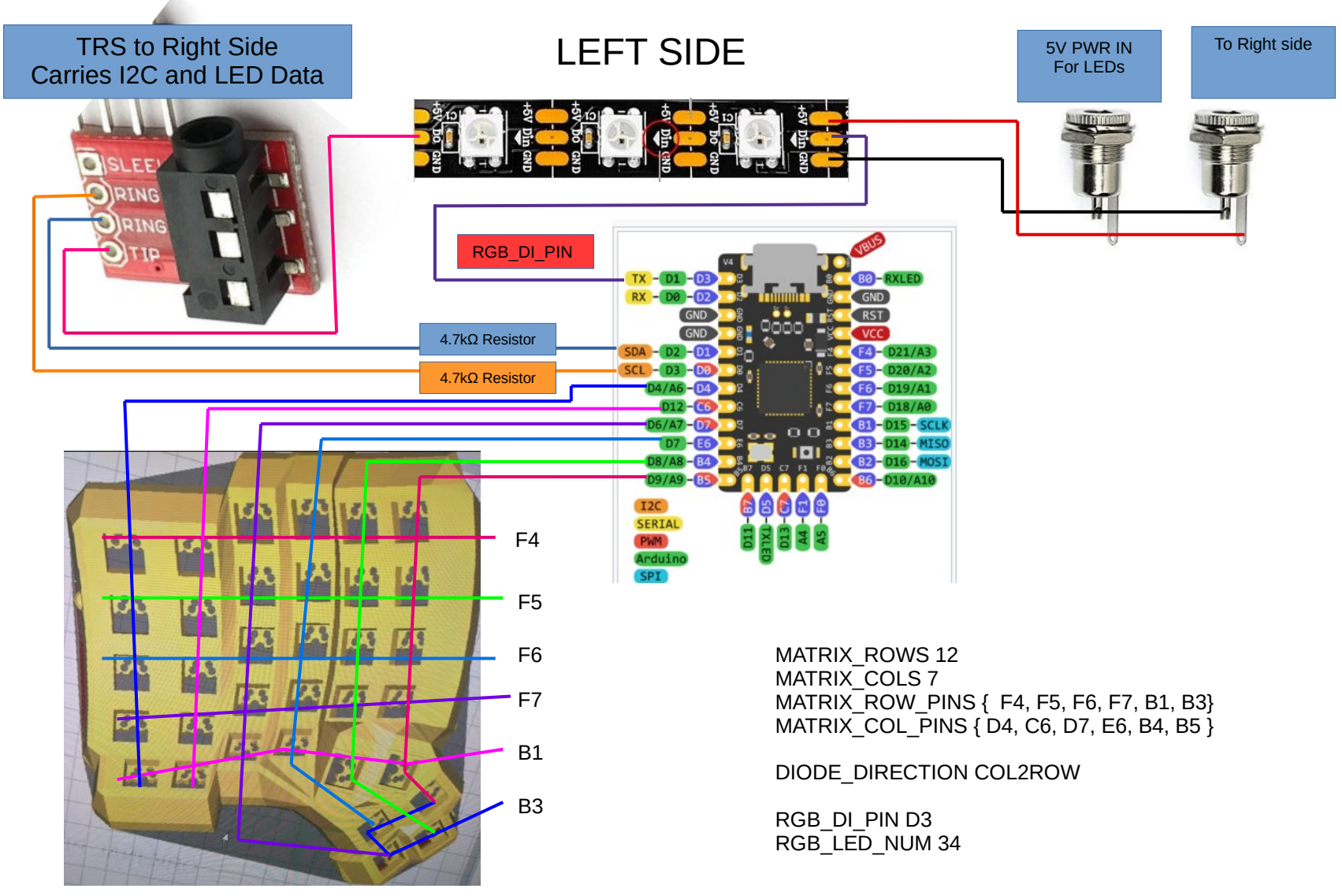


MATRIX_ROWS 12
MATRIX_COLS 7
MATRIX_ROW_PINS { F4, F5, F6, F7, B1, B3}
MATRIX_COL_PINS { D4, C6, D7, E6, B4, B5 }

DIODE_DIRECTION COL2ROW

RGB_DI_PIN D3
RGB_LED_NUM 34