BS 8300-1:2018

BSI Standards Publication

Design of an accessible and inclusive built environment

Part 1: External environment — Code of practice

Licensed copy: Aston University OpenAthens , Aston University, Version correct as of 25/08/2020

bsi.

Licensed copy: Aston University OpenAthens , Aston University, Version correct as of 25/03/2020

Publishing and copyright information

The BSI copyright notice displayed in this document indicates when the document was last issued.

© The British Standards Institution 2018

Published by BSI Standards Limited 2018

ISBN 978 0 580 92977 9

ICS 11.180.99; 91.040.01; 91.140.01

The following BSI references relate to the work on this document:
Committee reference B/559
Draft for comment 17/30335800 DC

Amendments/corrigenda issued since publication

Date	Text affected

© THE BRITISH STANDARDS INSTITUTION 2018 – ALL RIGHTS RESERVED

Contents

		Page
	Foreword	**iv**
	Introduction	1
1	Scope	2
2	Normative references	2
3	Terms and definitions	3
4	Integrating inclusive design principles into the development process	5
4.1	Inclusive design strategy	6
	Table 1 — Inclusive design strategy	7
4.2	Design and access statements	7
4.3	Access strategy	8
5	Strategic site and building layout	8
5.1	Site planning and position of buildings and other features	8
5.2	Navigation, orientation and way-finding	9
6	Arriving at a destination	11
6.1	Setting-down and picking-up points	11
	Figure 1 — Setting-down points	12
	Figure 2 — Dropped kerbs	13
6.2	Public transport infrastructure	14
7	Parking provision	15
7.1	Cycle parking	16
7.2	Provision of designated accessible parking spaces	16
	Table 2 — Provision of designated accessible parking spaces	16
7.3	Designated on-street parking	17
7.4	Designated off-street parking	17
	Figure 3 — Example of a designated on-street parallel parking space	18
7.5	Access to, and location of, designated off-street parking spaces	19
7.6	Design and layout of designated off-street parking spaces	20
	Figure 4 — Access around designated off-street parking spaces	20
	Figure 5 — Markings for multiple designated off-street parking spaces	21
7.7	Multi-storey car parks	21
7.8	Garaging and enclosed parking spaces	22
	Figure 6 — A garage designed for a wheelchair user and an ambulant driver	22
7.9	Electric vehicle charging	23
7.10	Mobility services and provision for electric mobility scooters	23
7.11	Entrances to car parks, and parking controls	23
7.12	Parking meters, payment systems and ticket dispensers	24
	Figure 7 — Key dimensions relating to ticket dispensing machines for use by wheelchair users	25
8	Horizontal movement	25
8.1	Access routes	25
	Figure 8 — The design of access routes	27
8.2	Hazards on an access route	28
	Figure 9 — Projections into an access route that do not need hazard protection	31
	Figure 10 — Projections into an access route that need hazard protection	32
8.3	Information and signage	33
8.4	Pedestrian surfaces	33
8.5	Gates, barriers and restrictions	34
9	Vertical movement	35
9.1	Steps and stairs	35

Licensed copy: Aston University OpenAthens , Aston University, Version correct as of 25/03/2020

Licensed copy: Aston University OpenAthens , Aston University, Version correct as of 25/03/2020

Figure 11 — Use of a corduroy hazard warning surface and handrails on an external stepped access 38
9.2 Ramps 39
Table 3 — Maximum permissible relationship between going, gradient and rise of ramps 40
9.3 Handrails 42
9.4 Lifting appliances, escalators and moving walks 44
9.5 Subways and bridges 45
10 Public facilities 46
10.1 Meeting and information points 46
10.2 Permanent visitor attractions 47
10.3 Temporary external events 47
10.4 Public art 48
10.5 Refreshment areas 48
10.6 Public telecommunications 49
10.7 Seating 49
10.8 Water features 50
10.9 Trees, planting and soft landscaping 50
10.10 Sanitary accommodation 51
10.11 Assistance dog toilets/spending areas 51
11 Lighting 51
Table 4 — Environmental zones 52
11.1 General principles of lighting 52
Table 5 — The artificial lighting of specific applications 53
11.2 Avoiding glare and shadows 53
11.3 Colour rendering 54
11.4 Illumination for lip reading 54
11.5 Ramps 54
11.6 Steps and stairs 54
11.7 Meeting and information points 54
11.8 Way-finding 54
12 Specific locations 55
12.1 Nature trails 55
12.2 Beaches and piers 55
12.3 Parks and gardens 56
12.4 Fishing and angling 57
12.5 Historic landscapes and monuments 57
12.6 Play areas 57
Annex A (informative) **Management and maintenance** **59**
Annex B (informative) **Using light reflectance values (LRVs) to assess visual contrast** **64**
Figure B.1 — Zones of good, acceptable and poor visual contrast in relation to the LRV of two adjacent surfaces 65
Table B.1 — Light reflectance values associated with the BS 4800 range of colours 66
Annex C (informative) **Space allowances for wheelchair manoeuvring and access to vehicles** **68**
Table C.1 — Width required at the side of a vehicle or between vehicles in a car park 69
Table C.2 — Widths for access at the side and the rear of a vehicle or between vehicles in a car park 70
Annex D (informative) **Temporary external events** **71**
Annex E (informative) **Space allowances for people passing on an access route** **77**
Figure E.1 — Space allowances for people on an access route 77

 © THE BRITISH STANDARDS INSTITUTION 2018 – ALL RIGHTS RESERVED

Annex F	(informative)	**Slip potential characteristics of treads, ramp surfaces and floor finishes**	**78**
	Bibliography		**80**
	Index		**84**

Licensed copy: Aston University OpenAthens , Aston University, Version correct as of 25/03/2020

Summary of pages

This document comprises a front cover, and inside front cover, pages i to vi, pages 1 to 91, an inside back cover and a back cover.

Foreword

Publishing information

This part of BS 8300 is published by BSI Standards Limited, under licence from The British Standards Institution, and came into effect on 31 January 2018. It was prepared by Technical Committee B/559, *Access to buildings for disabled people*. A list of organizations represented on this committee can be obtained on request to its secretary.

Supersession

Together with BS 8300-2, this document supersedes BS 8300:2009+A1:2010, which is withdrawn.

Relationship with other publications

BS 8300 is published in the following parts:

- Part 1: *External environment – Code of practice*;
- Part 2: *Buildings – Code of practice*.

Information about this document

A full revision of BS 8300:2009+A1:2010 has been undertaken. The principal change is to divide the document into two parts, as described below. The principal changes in respect of the external environment content are the addition of recommendations concerning:

- inclusive design;
- street design;
- public facilities includes temporary external events;
- specific locations;
- street furniture;
- external lighting;
- management issues associated with the external environment.

The recommendations for street design do not include any advice on shared space/shared surfaces, as responses to the public consultation on this edition of BS 8300-1 indicate that the subject is controversial, and further research is required before the subject can be covered in any detail in the standard.

During the revision, some changes were required to consolidate the changes made in BS 8300:2009+A1:2010, and many others to incorporate changes thought necessary by the Technical Committee following consideration of comments submitted by the public, organizations of disabled people and built environment professionals. More fundamentally, changes in the content have been necessitated by the decision to restructure BS 8300 into two parts, one to cover buildings and one to cover the external built environment. The latter incorporates material relating to the external environment that previously appeared in the original standard (e.g. parking, external ramps and external stairs), but it has also been expanded to include aspects of the wider external environment that were not covered in the original standard. These new aspects have been developed from BIP 2228.

Following the precedent established by the first edition of BS 8300, the structure of the two new parts follows the logic of the "journey sequence", starting with the new BS 8300-1 dealing with the wider external built environment, and BS 8300-2 dealing with the building itself. In the course

Licensed copy: Aston University OpenAthens , Aston University, Version correct as of 25/03/2020

 © THE BRITISH STANDARDS INSTITUTION 2018 – ALL RIGHTS RESERVED

Licensed copy: Aston University OpenAthens , Aston University, Version correct as of 25/03/2020

of restructuring the document, the drafting panels have also taken the opportunity to update the guidance and recommendations in the light of current good practice, including a comprehensive introduction to inclusive design and its place in the wider design process, and to take into account the content of new or revised standards published since 2010.

BS 8300 no longer gives guidance on individual dwellings as this is now covered by BS 9266.

The provisions in BS 8300 are based on ergonomic research conducted in 1999. The Technical Committee responsible for BS 8300 is aware of changing requirements relating to the variety of mobility aids now available and the physical space needed to use such devices, as well as the implications of the increasing use of technology and new building construction methods. However, at the time of publication of this edition of the standard, the committee does not know of any new ergonomic research on which to base changes to the space recommendations within the standard.

Many of the general access requirements of disabled children will be addressed by the recommendations in the standard. However, at the time of publication of this standard, the committee does not know of any ergonomic research that would justify any more specific recommendations being given. Detailed guidance on designing schools for disabled children and children with special educational needs is available in Building Bulletin 102 [1].

Since publication of the amended 2009 edition of BS 8300, the International Organization for Standardization (ISO) has published ISO 21542, which covers accessibility and usability of the built environment and is undergoing revision at the time of publication of this edition of BS 8300. Also, the European Commission has issued a mandate (Mandate 420) to European Standards bodies CEN and CENELEC to prepare a European Standard on accessibility requirements for public procurement in the built environment. The outcome of these processes will be taken into account in the next regular review of BS 8300.

Use of this document

As a code of practice, this part of BS 8300 takes the form of guidance and recommendations. It should not be quoted as if it were a specification and particular care should be taken to ensure that claims of compliance are not misleading.

Any user claiming compliance with this part of BS 8300 is expected to be able to justify any course of action that deviates from its recommendations.

The recommendations in this British Standard are accompanied by scene-setting commentary that places the recommendations in context for readers not familiar with the barriers experienced by disabled people when using the external environment and approaching buildings. In some instances, recommendations are quite specific; in others, they include dimensional ranges. Where dimensions and/or measurements are stated, they are subject to tolerances. Dimensional ranges are intended to provide designers with some flexibility of design solution.

Presentational conventions

The provisions of this standard are presented in roman (i.e. upright) type. Its recommendations are expressed in sentences in which the principal auxiliary verb is “should”.

Commentary, explanation and general informative material is presented in smaller italic type, and does not constitute a normative element.

Where words have alternative spellings, the preferred spelling of the Shorter Oxford English Dictionary is used (e.g. “organization” rather than “organisation”).

Websites referred to in this standard were last viewed on 3 January 2018.

Licensed copy: Aston University OpenAthens , Aston University, Version correct as of 25/03/2020

Contractual and legal considerations

This publication does not purport to include all the necessary provisions of a contract. Users are responsible for its correct application.

Compliance with a British Standard cannot confer immunity from legal obligations.

Particular attention is drawn to the following legislation:

- Equality Act 2010 [2];
- Building Regulations 2010 and subsequent amendments [3];
- Building (Amendment) (Wales) Regulations 2014 [4];
- Building (Scotland) Regulations 2004 and subsequent amendments [5];
- Building Regulations (Northern Ireland) 2012 and subsequent amendments [6];
- Regulatory Reform (Fire Safety) Order 2005 [7];
- Fire Safety (Scotland) Regulations 2006 [8];
- Fire Safety Regulations (Northern Ireland) 2010 [9].

Attention is also drawn to Article 9 in the UN Convention on the Rights of Persons with Disabilities, which states that appropriate measures should be taken to ensure that disabled people have access on an equal basis with others to the physical environment, transportation, information and communications, and to enable them to live independently and participate fully in all aspects of life.

 © THE BRITISH STANDARDS INSTITUTION 2018 – ALL RIGHTS RESERVED

Licensed copy: Aston University OpenAthens , Aston University, Version correct as of 25/03/2020

Introduction

This British Standard explains how the external built environment, including streets, parks, landscaped areas, the approach to a building, and the spaces between and around buildings, can be designed, built and managed to achieve an inclusive environment. It complements and is intended to be read in conjunction with the recommendations given in BS 8300-2.

The aim of this British Standard is to give built environment, urban design and landscape professionals the information they need at the outset of a project to achieve an accessible and inclusive environment and to anticipate and overcome any restrictions and barriers that prevent any user making full and independent use of the external environment. It recognizes that everyone wishes to use the external environment in different ways, for example as residents, visitors, spectators, customers, employees, holders of public office, or participants in sports events, shows, performances and outdoor learning. Everyone, including disabled and older people with particular access requirements, should be able to enter, use and leave a building, place or space easily, comfortably and independently, including being able to escape in the event of fire or other emergency.

Previous editions of BS 8300 have advised specifically on designing for disabled people. The new BS 8300-1 explains how to design, build and manage the external environment in a way that is inclusive. Designing to address and integrate the access requirements of all people, irrespective of their personal circumstances, as part of mainstream design, and thus achieve an inclusive environment, is always preferable to designating separate or specific features.

There will be situations where features that address a particular need, such as additional grab rails, touch legible signs and assistive listening systems, might be needed to enable easy use by a disabled person. Recommendations are given on these features. However, it is recognized that there are still areas (such as specific facilities that address the requirements of people of particular faiths) where further knowledge and expertise is needed. Efforts have been made to include reference to people's neurological requirements in this revision and extension of BS 8300; however, further work is required in this area.

Where access is available as a right, for instance on countryside paths and bridleways, this standard applies to all interventions which affect the physical condition of a right of way, for instance, if a gate or stile is provided or a constructed surface applied to a route. It is also expected to be of use to those with management responsibility for ensuring that public space remains inclusive and accessible over time and through change.

On nature trails, and paths in parks and gardens, where it might not be practicable to adhere strictly to the recommendations in this standard, the aim would nonetheless be to maintain as close compliance as possible.

It is advisable for the recommendations given in this standard to be applied at the earliest possible stage in the design process. It is also advisable for checks to be made before handover of a place or space to ensure that the recommended facilities have been correctly installed, and that arrangements for their continued maintenance are in place. Reference is made on occasions to ways in which management and maintenance can affect safe access and use of facilities. Good management is often vital and a prerequisite to making facilities work as they were intended. The beneficial effect of good management cannot be overemphasized.

Creating an accessible and inclusive environment is integral to the economic, social and environmental dimensions of sustainable development. Meeting the recommendations in BS 8300 can contribute to achieving sustainable development.

© THE BRITISH STANDARDS INSTITUTION 2018 – ALL RIGHTS RESERVED

Licensed copy: Aston University OpenAthens , Aston University, Version correct as of 25/03/2020

1 Scope

This part of BS 8300 gives recommendations for the design of the external built environment, including the approaches to buildings, to accommodate users with the widest range of characteristics and capabilities. It applies to:

a) key external features within the curtilage of or associated with a building or group of buildings, such as parking provision, setting-down points, access routes to and around buildings, and the approaches of entrances to buildings;

NOTE 1 The recommendations in this part of BS 8300 mainly cover access in the external environment and the approaches to buildings. The standard makes reference to design of internal environments but the main recommendations for design of internal environments are given in BS 8300-2.

b) other aspects of the external environment such as street design, landscaping, way-finding and information, horizontal and vertical movement, and public facilities.

The recommendations given in this part of BS 8300 apply largely to new developments, but can also be used when assessing the accessibility and usability of the existing external environment and, where practicable, as a basis for its improvement. The extent to which the recommendations apply to scheduled monuments, registered parks and gardens, registered battlefields and conservation areas is determined on a case-by-case basis.

NOTE 2 This part of BS 8300 does not give recommendations for the management and maintenance of external environments, but a list of issues to be considered is given in Annex A.

This part of BS 8300 does not apply to individual dwellings.

NOTE 3 Individual dwellings are covered by BS 9266.

2 Normative references

The following documents are referred to in the text in such a way that some or all of their content constitutes provisions of this document. For dated references, only the edition cited applies. For undated references, the latest edition of the referenced document (including any amendments) applies.

Standards publications

BS 6180:2011, *Barriers in and about buildings — Code of practice*

BS 8300-2, *Design of an accessible and inclusive built environment — Part 2: Buildings — Code of practice*[1]

BS 9266:2013, *Design of accessible and adaptable general needs housing — Code of practice*

BS EN 81-20, *Safety rules for the construction and installation of lifts — Lifts for the transport of persons and goods — Part 20: Passenger and goods passenger lifts*

BS EN 1991-1-1, *Eurocode 1 – Actions on structures — Part 1-1: General actions — Densities, self-weight, imposed loads for buildings*

BS EN 12414, *Vehicle parking control equipment — Pay and display ticket machine — Technical and functional requirements*

Other publications

[N1] DEPARTMENT FOR TRANSPORT. *Guidance on the use of tactile paving surfaces*. London: DFT, 2002.

1 This part of BS 8300 also gives informative references to BS 8300-2:2018.

 © THE BRITISH STANDARDS INSTITUTION 2018 – ALL RIGHTS RESERVED

Licensed copy: Aston University OpenAthens , Aston University, Version correct as of 25/03/2020

3 Terms and definitions

For the purposes of this part of BS 8300, the following terms and definitions apply.

3.1 access

approach, entry, internal movement or exit, including in cases of emergency

3.2 accessible

capable of being independently accessed and used

3.3 accessible route

any route that is used to access and use a place or space, including streets, parks and landscaped areas, to approach a building, or to move between buildings

3.4 blister pedestrian crossing surface

form of tactile paving whose surface has parallel rows of flat-topped blisters (domes) to warn people who are blind or partially sighted of the proximity of a carriageway at pedestrian crossing points and other access points to a carriageway

NOTE The paving is installed at the dropped kerbs of both controlled and uncontrolled crossings. The colour of the paving is red for controlled crossings (e.g. signal-controlled and zebra crossings) and generally buff at other crossings.

3.5 corduroy hazard warning surface

form of tactile paving, the surface of which has raised ribs to warn people who are blind or partially sighted of a potential hazard ahead

NOTE The ribs, spaced at 50 mm centres, are installed at right angles to the direction of travel.

3.6 desire line

shortest or most easily navigated pedestrian route between an origin and a destination

3.7 illuminance

amount of light falling on a surface, measured in lumens per square metre (lm/m^2) or lux (lx)

3.8 inclusive design

approach to the design of the environment, including buildings and their surrounding spaces, and managed and natural landscapes, to ensure that they can be accessed and used by everyone

3.9 lifting appliances

3.9.1 conventional passenger lift

lifting appliance within the scope of BS EN 81-20, operating at speeds greater than 0.15 m/s, for any travel distance, and intended for the transport of persons or persons and goods

NOTE Such lifts are designed to meet the requirements of the Lifts Regulations 2016 [10].

3.9.2 slow speed lift

vertical lifting appliance with enclosed carrier, operating at speeds not greater than 0.15 m/s, and intended for use by persons, including disabled persons

NOTE Such lifts are designed to meet the requirements of the Supply of Machinery (Safety) Regulations 2008 [11].

Licensed copy: Aston University OpenAthens , Aston University, Version correct as of 25/03/2020

3.10 light reflectance value (LRV)

total quantity of visible light reflected by a surface at all wavelengths and directions when illuminated by a light source

NOTE Surfaces that differ sufficiently in LRV can be distinguished from one another by people who are blind or partially sighted (see Annex B).

3.11 manifestation

permanent markings or features within areas of full-height transparent glazing, glazed walls or screens, fully glazed doors or glass doors, which help to prevent collisions by making the glazing more visible to users

3.12 orientation

relative physical position or direction of someone or something

3.13 ramps, steps and stairs

3.13.1 flight

continuous series of steps or continuous ramp between two landings

3.13.2 going

horizontal distance between two consecutive nosings, measured along the walking line; horizontal distance between each end of a ramp

3.13.3 handrail

component of stairs, steps or ramps that provides guidance and support at hand level

NOTE A handrail might form the top rail of guarding (balustrading), be supported independently from guarding or be supported from a wall.

3.13.4 landing

level platform or part of a floor at the end of a flight of steps or a ramp flight or slope

3.13.5 level

gradient not steeper than 1:60

3.13.6 nosing

front edge portion of a tread and riser or landing and riser

3.13.7 ramp

one or more inclined surfaces with a gradient between 1:20 and 1:12

3.13.8 rise

<of stairs> vertical distance between the horizontal upper surfaces of two consecutive treads, or between a tread and a floor or a tread and a landing

<of ramps> vertical distance between each end of a ramp flight

3.13.9 riser

vertical component of a step between one tread and another or a landing above or below it

3.13.10 slope

inclined surface with a gradient steeper than 1:60 and shallower than in 1:20

 © THE BRITISH STANDARDS INSTITUTION 2018 – ALL RIGHTS RESERVED

Licensed copy: Aston University OpenAthens , Aston University, Version correct as of 25/03/2020

3.13.11 stair width

surface width of a stair on plan perpendicular to the walking line of a stair

NOTE Measured to the face of the enclosing wall, string, balustrade or upstand, whichever is closer to the walking line.

3.13.12 tread

horizontal component of a step

3.14 tactile paving

profiled paving surface which is part of a national system providing guidance or warning to people who are blind or partially sighted

*NOTE 1 The most common forms of tactile paving are blister pedestrian crossing surface (see **3.4**) and corduroy hazard warning surface (see **3.5**).*

NOTE 2 The national system is set out in Guidance on the use of tactile paving surfaces *[N1].*

3.15 unisex

<of sanitary accommodation> designed for use by all, with or without assistance

3.16 visual contrast

perception of a difference visually between one surface or element and another by reference to their light reflectance values (LRV)

NOTE Guidance on LRVs is given in Annex B.

3.17 way-finding

means of ensuring that someone can find their way, avoid obstacles, and know when they have reached their destination

---

4 Integrating inclusive design principles into the development process

*COMMENTARY ON CLAUSE **4***

An inclusive environment recognizes and accommodates differences in the way people use the built environment. It facilitates dignified, equal and intuitive use by everyone. It does not physically or socially separate, discriminate or isolate. It readily accommodates and welcomes diverse user requirements – from childhood to adulthood through to old age, across all abilities and embracing every background, gender, sexual orientation, ethnicity, religion or belief, and culture (i.e. protected characteristics). It helps people to live independently and participate fully in all aspects of life.

An inclusive environment:

- *creates buildings, places and spaces that can be used easily, safely and with dignity by everybody;*
- *provides choice, is convenient and avoids unnecessary effort, separation or segregation;*
- *goes beyond meeting minimum standards or legislative requirements;*
- *recognizes that everyone benefits from improved accessibility, including disabled people, older people and families with children, carers, and people who do not consider themselves to be disabled.*

An inclusive environment works better for everybody, whether a place is a home, school, office, factory, park, street, hospital, nursing, residential or care home, bus route or train station.

It is not just disabled and older people, or families with small children who benefit from a well-designed and managed built environment – everyone benefits. Good design is inclusive design.

© THE BRITISH STANDARDS INSTITUTION 2018 – ALL RIGHTS RESERVED

Achieving an inclusive environment is the responsibility of everyone who works in the built environment, from those who commission new buildings, places and spaces, to planners, designers, engineers and surveyors, and to the owners, interior designers and facilities managers responsible for the building, place or space in use. Further guidance is given in the Construction Industry Council's advice on achieving an accessible and inclusive environment entitled Essential principles for built environment professionals *[12].*

The Design Council, in its Inclusive Design Hub[2]*, advises that applying the following five principles of inclusive design*[3] *from the outset of a project can help achieve an accessible and inclusive environment.*

a) *Place people at the heart of the design process.*

b) *Acknowledge diversity and difference.*

c) *Offer choice where a single design solution cannot accommodate all users.*

d) *Provide for flexibility in use.*

e) *Provide buildings and environments that are convenient and enjoyable for everyone to use.*

Integrating the principles of inclusive design into the design, development and management process from project inception to completion and occupation is critical to the achievement of an accessible and inclusive environment. Accessibility and inclusivity issues need to be addressed from the outset of any project, but this has traditionally been left to the planning application and detailed design stages, which can often result in compromises and missed opportunities for achieving social and physical inclusion.

4.1 Inclusive design strategy

*COMMENTARY ON **4.1***

An effective way of ensuring that the principles of inclusive design are applied and integrated from the outset of a project is by producing an inclusive design strategy. Such a strategy is an effective way of demonstrating to the client, contractor, user groups and others involved in the development of the project, how the inclusive strategic vision will be developed and implemented over the course of the project. It helps to inform the developer's initial vision, the project's strategic brief and the procurement process. It also provides the opportunity to identify people and expertise necessary to deliver an inclusive environment and to monitor consistent implementation of the principles throughout the later stages of the project, particularly if a design and access statement is needed at planning application stage and/or if an access strategy is needed at building control stage.

An inclusive design strategy should be produced at the outset of the project. The strategy should explain how the principles of inclusive design are to be addressed and implemented in the project stages shown in Table 1.

NOTE The management of inclusive design is described in BS 7000-6.

2 See http://www.designcouncil.org.uk/what-we-do/inclusive-environments.
3 For further information see the CABE publication *The principles of inclusive design – They include you* [13].

 © THE BRITISH STANDARDS INSTITUTION 2018 – ALL RIGHTS RESERVED

Licensed copy: Aston University OpenAthens , Aston University, Version correct as of 25/03/2020

Licensed copy: Aston University OpenAthens , Aston University, Version correct as of 25/03/2020

Table 1 — *Inclusive design strategy*

Typical project stage	Typical inclusive design activities
Strategic vision	Commit to implementing an inclusive design process and identify an inclusive environment champion
Initial concept brief	Embed principles of inclusive design into brief
Budget estimates	Ensure that costs address accessibility and inclusivity, including costs of access expertise on project team from inception through to completion
Procurement process	Incorporate principles of inclusive design into procurement requirements
Development agreements	Make explicit reference to meeting best practice standards in any development agreements
Master plan and outline designs	Initiate early consultation and engagement with strategic user groups representing people with protected characteristics
Planning application	Use the design and access statement to demonstrate how the highest standards of access and inclusion have been achieved
Building control application	Demonstrate in any access strategy how access solutions have met the vision of an inclusive environment
Detailed design and product selection	Maintain vigilance in the detailed design and product selection to ensure that inclusive access and facilities are delivered
Construction phase	Ensure that any value engineering or other changes during the construction phase are not to the detriment of inclusive design or accessibility
Appraisal at project completion	Audit accessibility and means of escape provisions prior to completion using access expertise
Fit-out and post-occupancy evaluation	Maintain levels of accessibility and ensure that staff are fully trained in use of facilities
In-use management policies, practice and procedures	Monitor future changes and embed principles of inclusive design into planned maintenance programmes
Long-term occupancy, end-user/ public feedback	Review end-user feedback, tailored audit changes and customer surveys, for inclusive design lessons learned

4.2 Design and access statements

*COMMENTARY ON **4.2***

A design and access statement is a concise report accompanying certain applications for planning permission and applications for listed building consent. They provide a framework for applicants to explain how the proposed development is a suitable response to the site and its setting, and demonstrate that it can be adequately accessed by prospective users. Design and access statements can aid decision-making by enabling local planning authorities and third parties to better understand the analysis that has underpinned the design of a development proposal.

A design and access statement should be consistent with the inclusive design strategy.

It should demonstrate:

- that the applicant has thought carefully about the design of the development given its context;
- that the principles of inclusive design have been applied throughout the planning process;
- how everyone will be able to use the places and spaces that are proposed;
- what inclusive design solutions have been adopted.

Licensed copy: Aston University OpenAthens , Aston University, Version correct as of 25/03/2020

It should illustrate, in drawings and text, how the proposal meets legal requirements and technical access standards, including the provisions in this British Standard. It should justify the decisions taken, especially any deviation from accepted good practice.

The level of detail in a design and access statement should be proportionate to the complexity of the application.

4.3 Access strategy

*COMMENTARY ON **4.3***

An access strategy can be used at building control stage to enable the applicant to clearly communicate to the building control body how their chosen approach meets the accessibility requirements of the likely end users of a building, place or space. It also provides the opportunity to demonstrate compliance with this British Standard and with the initial inclusive design strategy developed at the outset of the project.

An access strategy should be consistent with the project's original inclusive design strategy and, where applicable, with the design and access statement. It should explain the approach to inclusive design to be adopted in the detailed design and construction of the building, place or space and in any ongoing management and maintenance issues that could affect the accessibility and usability of the building, place or space (see Annex A).

Where alternative access solutions to those recommended in this standard have been proposed, the access strategy should describe how the same or improved level of access will be achieved.

NOTE 1 The access strategy could be further developed by the site operator and included in their policies, practices and procedures (including staff training and the provision of information to visitors) to show how the accessibility of the environment and its facilities will be managed and maintained, including when alterations are carried out and when procedures or tenants change.

NOTE 2 An access strategy could also be developed following an access audit of an existing space or following a major refurbishment. Under such circumstances it is accepted that it might not be possible to adapt the existing space to meet all the recommendations of this standard. However, if this is the case, the access strategy would need to explain why the standards cannot be met or why the same level of access cannot be achieved, and to identify the implications for users and what means are being provided to lessen the impact.

5 Strategic site and building layout

*COMMENTARY ON CLAUSE **5***

The initial master planning/outline planning permission stage allows an opportunity to assess the context of the site, its topography and whether the buildings and their approaches can be arranged in such a way as to maximize the accessibility of the development. For example, early assessment of gradients across the site, the orientation of the buildings and their entrances and their relationship with car, cycle and mobility vehicle parking, pedestrian entrances and access to public transport can dictate how accessible the development will ultimately be.

5.1 Site planning and position of buildings and other features

Buildings and other features should be positioned and organized on a site in a way that:

a) makes optimum use of contours and levels for ease of access and egress;

b) enables easy navigation without confusion, logically integrating way-finding and signage;

c) makes features prominent and legible from the point of arrival at the area;

d) prioritizes key facilities along axial routes in the area;

e) accommodates the anticipated level and volume of use;

 © THE BRITISH STANDARDS INSTITUTION 2018 – ALL RIGHTS RESERVED

Licensed copy: Aston University OpenAthens , Aston University, Version correct as of 25/03/2020

f) locates means of horizontal and vertical movement appropriately;

g) locates other facilities such as toilets appropriately;

h) ensures that all entrances to a building are inclusive and can be easily found;

i) locates entrances and exits, including emergency exits, to enable easy management of emergency evacuation according to anticipated numbers and diversity of need.

5.2 Navigation, orientation and way-finding

5.2.1 General

The external built environment should be designed, constructed and managed to facilitate convenient orientation and way-finding. Orientation and way-finding should be planned at the outset of a project to ensure that the arrangement of any building and its entrances on a site enable people to navigate and orientate themselves easily.

The ease of orientation in and way-finding through an area is determined by its inherent legibility (see **5.2.2**), supported by information systems and signage. A way-finding strategy (see **5.2.4**) should be developed as part of the inclusive design strategy.

5.2.2 Legibility of space

*COMMENTARY ON **5.2.2***

Legibility of space is the degree to which a place has a clear image and is easy to understand. It includes recognizable routes, intersections and landmarks to help people find their way around.

Visual clutter can be defined as a visually chaotic scene, caused by the inclusion of multiple elements of street furniture without consideration of the overall scene, which can detract from the overall legibility of the environment. Street furniture contributing to visual clutter can include (but is not limited to) such items as lighting or CCTV columns, signage, litter bins, pedestrian barriers, planters, benches and bollards. Visual clutter can detract from the visual character of an area and makes it increasingly difficult to navigate an external space.

A well thought-out external space can minimize the impact of clutter through the careful location and integration of the various elements of street furniture, e.g. mounting signage and litter bins on lighting columns, or mounting lighting equipment on existing structures.

Paths, roadways and streets should be designed to provide a strong, legible framework.

Pedestrian routes should be designed to be easily identifiable, predictable and direct. Straight lines with turns of 90° are the easiest to follow and should be provided on at least one route through an area, and this should be an accessible, step-free route.

NOTE 1 Winding routes can be disorientating, increase travel distances and result in informal desire lines.

NOTE 2 Visual contrast between different surfaces can be helpful if used appropriately to signal a change of surface purpose, for example a road surface compared with a path, a cycleway compared with a bus lane. Introducing strong visual contrast for aesthetic reasons can result in the surface finish being misinterpreted.

Pedestrian paths should have a detectable demarcation which can be followed by people who are blind or partially sighted, for example a wall, building line, kerb edge, grass verge, barrier, or clearly detectable change in texture of the surface underfoot. Visual contrast should also be provided.

5.2.3 Principle of two senses

Supportive measures for information and way-finding should be provided in a format that is accessible to people with sensory impairments, according to the principle of at least two senses.

Audible, tactile, visual and other sensory information should be provided where possible.

NOTE The most common supportive measures are likely to be audible/tactile information and visual information. Different forms of sensory information are not always alternatives but can be complementary. They support people with different access requirements.

5.2.4 Way-finding

Way-finding should use spatial, physical and environmental clues to help people plan and navigate moving from one place to another. Appropriate way-finding clues should be incorporated which could include, but are not limited to:

a) architectural clarity, for example:
   - logical arrangements and clear identification of routes, entrances and elements;
   - clearly detectable paths:
   - landmarks;
   - zones;

b) graphic communication, for example:
   - signs;
   - information;
   - maps and directories;

c) tactile communication, for example:
   - embossed signage;
   - Braille signage;
   - tactile paving;
   - changes in level and kerb upstands;
   - tapping rails;

d) audible communication and sounds, for example:
   - talking signs;
   - announcement systems;
   - fountains/water features when in operation;
   - changes in walking surface;
   - the proximity of buildings and gaps between buildings;
   - traffic noise;
   - acoustics that support clear interpretation of sound and speech;
   - way-finding instructions based on app-based GPS navigation;
   - audio descriptive way-finding information;

   NOTE 1 Some guidance on audio descriptive way-finding information can be found in the VocalEyes publication Museum access information guidelines 2016 [14].

e) visual communication, for example:
   - visual clarity in terms of colour and contrast;
   - good lighting that avoids excessive reflections, glare, and shadowing;

 © THE BRITISH STANDARDS INSTITUTION 2018 – ALL RIGHTS RESERVED

Licensed copy: Aston University OpenAthens , Aston University, Version correct as of 25/03/2020

Licensed copy: Aston University OpenAthens , Aston University, Version correct as of 25/03/2020

- clarity of text and symbols;

f) the use of personal navigation systems, for example:

- mapping and memory;
- global positioning systems (GPS);
- apps on personal mobile devices.

NOTE 2 Personal navigation systems can be very useful for some people but not all people can use these consistently and reliably to find their way. They can also be problematic in built-up urban areas.

NOTE 3 Features such as plants and water features which can change according to day, time, season, etc. cannot be relied on but can provide additional way-finding clues. Similarly, some plants, and buildings such as bakeries, can provide scent clues; these can also change according to day, time, season, etc., and not all people can consistently detect a change in smell, but again this can be a useful additional clue for some people. Refer to Sensory Trust publications and website (http://www.sensorytrust.org.uk) for more information.

Signage should be in accordance with **8.3** and lighting with Clause **11**.

NOTE 4 Signage types used to support way-finding include information, directional, identification (location/arrival), and safety (fire and mandatory) signage.

NOTE 5 Environments under development might need to take account of changes in routes through the location as development progresses, and way-finding signage might need to be emphasized accordingly.

6 Arriving at a destination

*COMMENTARY ON CLAUSE **6***

Using public transport, car/cycle parking, setting-down and picking up are important activities for anyone at the beginning or end of journeys. Car parks can be open or multi-storey; setting-down and picking-up points can be on- or off-street; journeys can end inside a garage or an enclosed parking space. The external environment has to be designed to allow people to access public and private transport.

In some instances, a person might need to manoeuvre a powered wheelchair or electric mobility scooter through the rear or side entrance of a vehicle, requiring a larger than standard designated accessible parking space.

It is important that car/cycle park entry and payment equipment is accessible to, and usable by, all people. Drivers, whether disabled or not, expect to use many types of equipment without leaving their vehicle. Alternatively, where parking facilities are staffed, entry can be facilitated by management, e.g. by showing a Blue Badge permit.

After parking a vehicle, people need to be made aware of the accessible route away from their parking space to the exit, this route being demarcated from any vehicular or cycle route.

6.1 Setting-down and picking-up points

*COMMENTARY ON **6.1***

The driver of a vehicle (alone or accompanied) or a passenger might be a disabled person and might need to enter or leave the vehicle using a transfer hoist or a side or rear ramp; when used, hoists are semi-permanently attached to the vehicle. Alternatively, it might be necessary for an assistant to alight from a vehicle first, then assist a disabled companion to do the same. When picking up, a companion might need to park temporarily to escort a disabled person who is waiting inside premises to the vehicle.

A designated setting-down point or picking-up point, suitable for disabled passengers, should be provided on firm and level ground, close to the accessible entrance to a building. Its location should

be clearly indicated. This setting-down point should be provided in addition to designated accessible parking spaces and taxi waiting zones. If feasible, a short-term waiting area for drivers of vehicles picking up disabled passengers or a disabled driver waiting for passengers should also be provided.

NOTE 1 Depending on the nature of the building, the designated setting-down point might need to accommodate minibuses and other larger vehicles that use hoists, ramps or tail-lifts.

Setting-down points should have dimensions of not less than 9 m × 3.6 m as shown in Figure 1. If the setting-down point is covered, the ceiling height above the vehicle surface should be at least 2.6 m.

Dropped kerbs should be in accordance with Figure 2.

The surface of the access route, alongside a setting-down point, should be level to allow convenient transfer into and from a wheelchair.

NOTE 2 It is desirable for setting-down and picking-up points to have their kerb heights coordinated with local licensed vehicles to ensure that ramps are safe and at a suitable gradient.

If feasible, a setting-down point should be covered to provide protection from the weather.

Where all car parking is within the building itself, setting-down points should be provided adjacent to an accessible route to the principal entrance.

Figure 1 — *Setting-down points*

Dimensions in millimetres

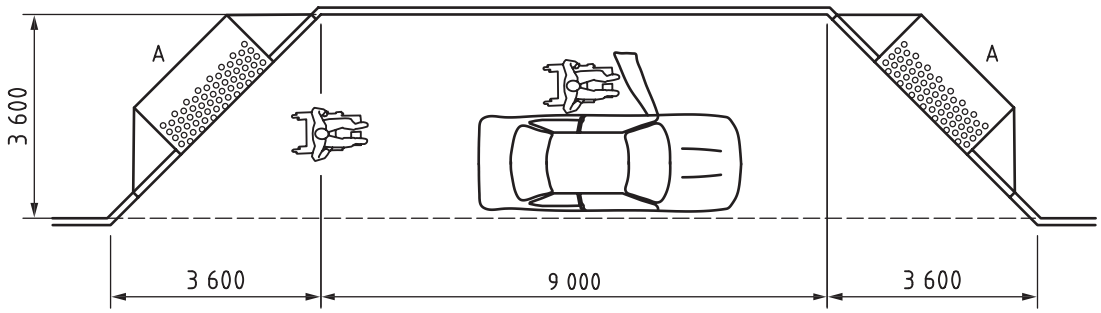

Key

A Two dropped kerbs with minimum 1 500 mm footpath

Licensed copy: Aston University OpenAthens , Aston University, Version correct as of 25/03/2020

 © THE BRITISH STANDARDS INSTITUTION 2018 – ALL RIGHTS RESERVED

Figure 2 — *Dropped kerbs*

Dimensions in millimetres

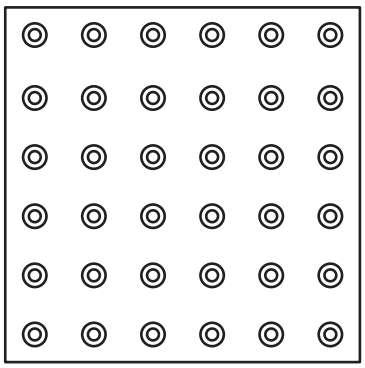

a) Blister surface (with 36 domes)

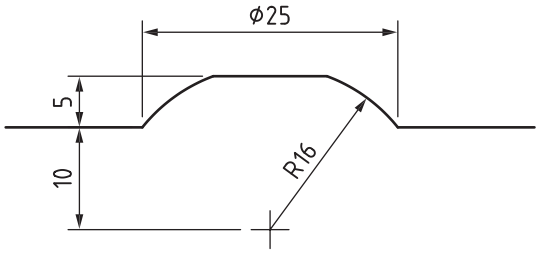

b) Dome profile

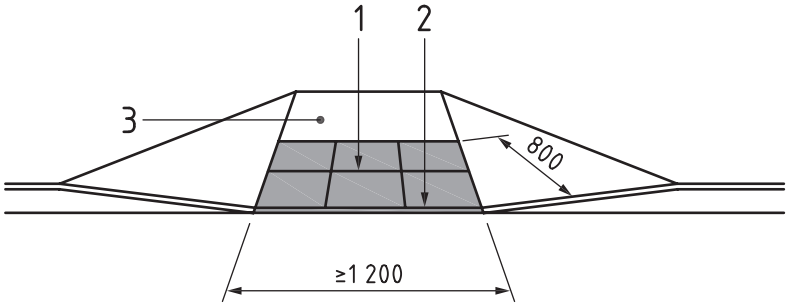

c) Dropped kerb at an uncontrolled crossing

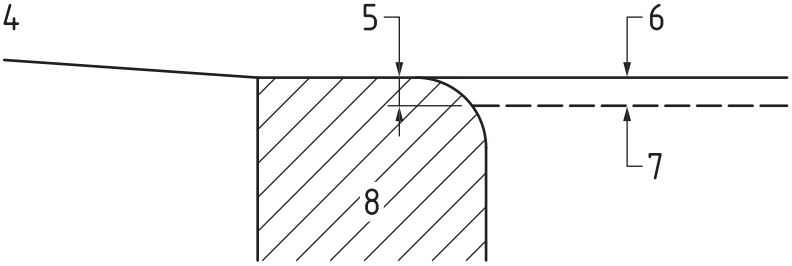

d) Maximum upstand to dropped kerb

Key

1 Blister surface
2 Upstand to dropped kerb
3 Gradient 1:12 max.
4 Footway
5 Not greater than 6 mm
6 Preferred carriageway surface level
7 Minimum carriageway surface level
8 Kerb

Licensed copy: Aston University OpenAthens , Aston University, Version correct as of 25/03/2020

Licensed copy: Aston University OpenAthens , Aston University, Version correct as of 25/03/2020

6.2 Public transport infrastructure

NOTE Further information on public transport infrastructure is given in Inclusive mobility – A guide to best practice on access to pedestrian and transport infrastructure [15].

6.2.1 All transport modes

Real-time information about routes and departures should be provided in both visible and audible formats (including assistive listening systems), both at stops and on the vehicle.

Ticketing facilities should be accessible to all users (see also **7.11.3**).

6.2.2 Bus stops

Bus stops should conveniently serve key facilities and services by being located within a reasonable walking distance. They should be adjacent to, but not obstructing, pedestrian routes; and pedestrians should have access to and from the bus stop without crossing cycle routes, including where these run between the pedestrian route and the vehicle carriageway.

Kerb heights at bus boarding points should be designed to minimize the vertical stepping distance for users and lessen the resulting gradient for any ramps used for wheelchair and mobility aid users, and should be aligned with any local vehicle requirements. The bus boarding point should be designed to allow the bus to stop as close as possible to the kerb alignment to reduce the horizontal stepping distance.

The unobstructed boarding area at the stop (onto which the ramp is lowered) should be 2 000 mm × 2 000 mm.

6.2.3 Tram platforms

New tram systems should be accessible and inclusive.

Platforms at the tram stop should provide step-free access and incorporate the correct type and layout of tactile paving in accordance with *Guidance on the use of tactile paving surfaces* [N1].

6.2.4 Bus/tram shelters

*COMMENTARY ON **6.2.4***

The recommendations given in this subclause provide an absolute minimum standard. More detailed guidance is given in Inclusive mobility – A guide to best practice on access to pedestrian and transport infrastructure *[15]. In particular, adequate provision needs to be made for wheelchair users and people using other mobility aids, including assistance dogs.*

The locations and circumstances in which shelters are provided vary considerably, and this should be taken into account when determining the precise design to be used.

Shelters should be positioned such as not to reduce the access route width below that recommended in **8.1.2**.

Shelter structures should contrast visually with the background against which they are seen, and where full height glazing is provided, this should be clearly highlighted with a manifestation. This manifestation should be a minimum of two colours which contrast visually with each other and their backgrounds under both natural and artificial lighting conditions. It should be located within two zones, from 850 mm to 1 000 mm from ground level and from 1 400 mm to 1 600 mm from ground level.

NOTE 1 Suitable manifestation is likely to take the form of a continuous or broken line, sign, logo or patterning on the glass that covers at least 10% of the glazing area within each zone.

 © THE BRITISH STANDARDS INSTITUTION 2018 – ALL RIGHTS RESERVED

Licensed copy: Aston University OpenAthens , Aston University, Version correct as of 25/03/2020

Shelters should provide suitable weather protection for users. The minimum extent of the weather protection they provide should be at least 1 200 mm deep for open shelters and 1 500 mm for shelters enclosed on all sides. All shelters should provide an unobstructed turning space (clear of any seating) of 1 500 mm × 1 500 mm.

Where seating is provided to bus shelters it should be usable for a variety of people and should therefore incorporate arm rests and back support (see **10.7**).

The design of a shelter should not obscure the view of approaching vehicles or traffic.

Bus and tram stops and shelters should be well lit with sufficient illumination to enable reading. Route information should be provided for passengers which includes:

- route number/name;
- pictogram of a bus or tram (as applicable);
- direction of travel towards (name of next town/principal destination);
- contact details for information and assistance.

Information displays should be made of non-reflective materials, and should be designed to take account of:

- viewing distance in relation to text sizes;
- display heights suitable for seating and standing.

Where real-time information is provided, the screen should be shielded from direct sunlight and reflective surfaces.

*NOTE 2 Visual displays of expected arrival times of buses at stops, destinations served and any delays are helpful for all passengers but particularly so for Deaf and hard of hearing people. Audible information systems can assist people who are blind and partially sighted, and people who have sensory/neurological processing difficulties. See also **5.2.3**.*

7 Parking provision

*COMMENTARY ON CLAUSE **7***

Parking for cars and other vehicles needs to cater for a range of activities and people, including residents, staff, visitors, people making deliveries, etc. Any car parking provision needs to accommodate designated spaces for disabled people, including wheelchair users. This can be on-street parking where vehicles are parked parallel or at an angle to the carriageway, or part of an off-street car park.

A suitable parking scheme in terms of disabled persons' parking provision, design and location is essential to ensure that parking options and choices are provided for Blue Badge holders.

Where a development is intended to rely on the provision of designated on-street Blue Badge parking spaces, distributed to minimize pedestrian travel distances to destinations, the level of provision will need to be negotiated with the local authority highways department.

To assist in minimizing the likelihood of misuse of designated accessible parking spaces and to improve the overall user experience for everyone, a range of parking spaces for a variety of specific uses could be provided in larger developments, including:

- *separately identified parent/guardian and child parking (with equivalent layout as designated accessible parking spaces), located in car parks so as to avoid users having to cross roadways;*
- *larger bays for minibuses, camper vans and cars with caravans or trailers – especially in localities subject to tourism or where larger vehicles are expected due to the service or facilities which the parking spaces serve;*

- *extra-wide general purpose parking spaces (2.5 m rather than 2.4 m) with doubled-up white lines between parking spaces to encourage cars to park clear of pedestrian access to vehicles.*

Where electrical charging points are available, these can provide choice for users and can be provided to standard spaces, parent and child spaces, Blue Badge parking spaces and larger spaces.

Pedestrian crossing points with dropped kerbs and tactile (blister) paving can be provided where pedestrian routes cross roadways within car parks.

7.1 Cycle parking

Cycle parking should be located in a clearly defined area.

Cycle stands should contrast visually with the background against which they will be seen.

Cycle stands should provide ground level detection for the extent of the stand, in the form of a tapping rail for people who are blind or partially sighted navigating using a white cane, with its underside not higher than 150 mm above ground level, or similar barrier.

Where a number of cycle stands are provided, some of the cycle stands should be positioned to allow the parking of adapted cycles, which can be considerably larger than other cycles. This should be taken into account in the positioning of cycle stands clear of pedestrian route widths (see also **8.2.1.3**).

NOTE 1 Adapted and multi-user cycles can take many forms of varying sizes including family cycles, tandems and tricycles.

NOTE 2 Information on route design for cycles can be found in Highways England IAN 195/16 [16].

NOTE 3 Further information on cycle parking can be found in Chapter 8 of the London cycling design standards [17].

7.2 Provision of designated accessible parking spaces

Designated accessible parking spaces should be provided as a minimum in accordance with Table 2. Where there is evidenced local need that a higher percentage is required, this should be provided accordingly.

Table 2 — *Provision of designated accessible parking spaces*

	One space for each employee who requires one	**Designated spaces**	**Enlarged spaces (see 7.4.1)**
		% of total parking spaces	% of total parking spaces
Workplace	Yes	5	5
Educational buildings	Yes	5	5
Shopping, recreation and leisure	Yes	6	4
Transport car parks	Yes	5	5
Medical and health facilities	Yes	6	4
Religious buildings and crematoria	Yes	Min. two spaces or 6%, whichever is the greater	4
Sports facilities	Refer to Sports England guidance.		

 © THE BRITISH STANDARDS INSTITUTION 2018 – ALL RIGHTS RESERVED

Licensed copy: Aston University OpenAthens , Aston University, Version correct as of 25/03/2020

NOTE An example of accessible parking provision for shopping, recreation and leisure is as follows:

- *total number of car parking spaces = 100;*
- *three spaces are provided for specific disabled members of staff, leaving 97 spaces;*
- *6% of remaining 97 spaces are to be designated accessible spaces = 5.82, round up to 6; and*
- *4% of remaining 97 spaces are to be enlarged spaces = 3.88, round up to 4, thus providing 87 standard spaces.*

7.3 Designated on-street parking

*COMMENTARY ON **7.3***

Some disabled people have difficulty transferring from vehicle to wheelchair or to pavement, if the pavement is above the level of the carriageway. However, wheelchair-accessible taxis and other rear- and side-entry vehicles are easier to access from a raised kerb.

Where designated on-street parking spaces are provided, they should be sited where road gradient and camber are reasonably level, e.g. 1:50. A dropped kerb (with associated blister paving) or level surface should be provided to permit convenient access from the parking space onto the pavement.

The dimensions of such parking spaces, parallel to the kerb, should be 3.6 m wide × 6.6 m long, to permit access to the rear of a vehicle to use a ramp or tail-lift and to enable the driver or passenger to alight on the side where traffic might be passing.

NOTE Further guidance is given in Inclusive mobility – A guide to best practice on access to pedestrian and transport infrastructure [15].

7.4 Designated off-street parking

7.4.1 General provision

Designated accessible parking spaces should be provided for all known users who are disabled motorists (driver or passenger) and for other disabled motorists visiting the building or location. Spaces designated for known users who are disabled (e.g. staff whether paid or unpaid) should be differentiated from spaces designated for other users. In addition, a number of enlarged standard spaces of 3.6 m wide × 6 m long should be provided that could be adapted to be designated accessible parking spaces.

NOTE 1 Initially, these spaces will benefit non-Blue Badge holders who need extra width to enter, or exit from, their vehicles. In the longer term they will allow for flexibility of provision to reflect the changing requirements of the building users.

Where off-street parallel designated parking spaces are provided, they should be in accordance with Figure 3.

Licensed copy: Aston University OpenAthens , Aston University, Version correct as of 25/03/2020

Figure 3 — *Example of a designated on-street parallel parking space*

Dimensions in millimetres

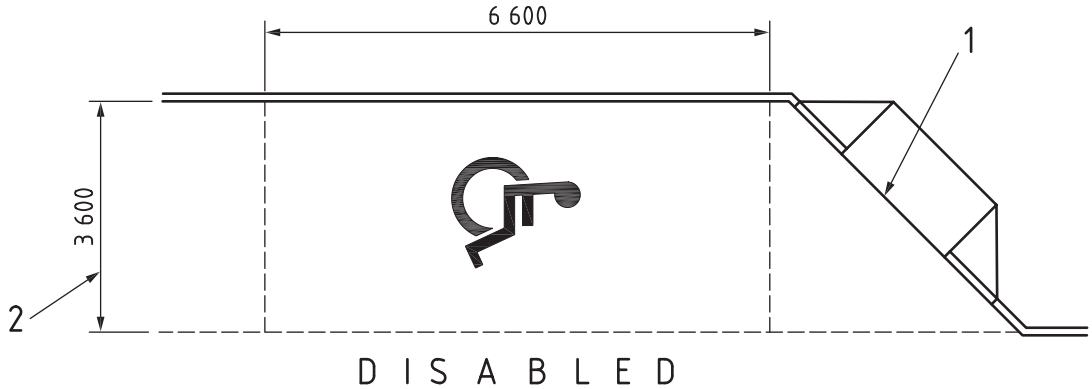

Key

1 Dropped kerb (with blister tactile paving)

2 Allows safety zone on kerb or street side

NOTE This arrangement may also be used for off-street parallel parking.

Where space permits, at least one large designated accessible parking space, 4.8 m wide × 8 m long, should be provided to cater for commercial vehicles converted for side or rear access using hoists or ramps. Such spaces should follow the recommendations in 7.5 and 7.6.

Designated accessible parking spaces should be solely for the use of disabled people. If there is an evidenced need, parent and child parking spaces should be provided in addition to any other designated/assigned parking spaces.

NOTE 2 Annex C gives information on the space required to access different sized vehicles in different ways.

NOTE 3 The use of designated accessible parking spaces needs to be monitored regularly by the provider of the parking to limit misuse by non-disabled motorists and to confirm that the number of designated spaces remains appropriate for the number of disabled motorists using the building or location. In circumstances where the function of the building or location is to provide services to a population that includes a greater than normal proportion of disabled people, the number of designated parking places needs to be increased above the minimum provision, based on experience. Further information on car park management is given in Annex A.

Additionally for buildings likely to be used by people with small children, for example retail and leisure facilities, some designated accessible parking spaces should be provided for motorists accompanied by a small child in a pushchair or stroller.

NOTE 4 These spaces do not necessarily need to be adjacent to the facility, provided that safe walking routes are provided.

NOTE 5 These are to be designated with a suitable parent and child sign. Such spaces are to be provided with extra room around the vehicle. This space provides additional room that is required to load the small child, associated baggage, and pushchair or stroller into the vehicle.

7.4.2 Workplaces

For workplaces where parking is provided, the minimum number of designated spaces should be one space for each employee who is a disabled motorist, plus 5% of the total visitor capacity for visiting disabled motorists subject to a minimum of two spaces.

 © THE BRITISH STANDARDS INSTITUTION 2018 – ALL RIGHTS RESERVED

Licensed copy: Aston University OpenAthens , Aston University, Version correct as of 25/03/2020

Licensed copy: Aston University OpenAthens , Aston University, Version correct as of 25/03/2020

7.4.3 Shopping, recreation and leisure facilities

For shopping, recreation and leisure facilities, the minimum number of designated spaces should be one space for each employee who is a disabled motorist, plus 6% of the total visitor capacity for visiting disabled motorists. One space should be provided for each disabled employee; 6% of the remaining spaces should be designated accessible parking spaces and 4% should be enlarged spaces.

Where on-site parking is provided, hotels or multi-occupancy buildings should have at least one designated accessible car parking space per accessible bedroom (see Note 1).

NOTE 1 In hotels or multi-occupancy buildings where space is limited, these could be enlarged standard spaces that can be reserved to provide flexible parking options with priority given to disabled motorists.

NOTE 2 Use of unoccupied designated accessible parking spaces is a matter for management control.

*NOTE 3 Accessible bedrooms are defined in BS 8300-2:2018, **3.3**.*

NOTE 4 The numbers of designated spaces might need to be greater at venues that specialize in accommodating groups of disabled people.

7.4.4 Transport car parks

For transport car parks, the minimum number of designated accessible parking spaces should be one space for each employee who is a disabled motorist, plus 5% of the total visitor capacity for visiting disabled motorists.

Where car parking is split into short and long stay, all designated parking spaces and enlarged standard spaces should be located together, as near as feasible to the transport facility entrance.

NOTE Further guidance on car parking at railway stations can be found in Design standards for accessible railway stations [18].

7.4.5 Religious buildings and crematoria

For religious buildings, such as places of worship, and for crematoria, the minimum number of designated spaces should be two spaces or 6% of the total visitor capacity, whichever is the greater.

Car parking spaces should be provided for specialist vehicles, hearses, wedding arrivals and minibuses. Setting-down and picking-up points should be provided for community transport vehicles.

7.4.6 Sports facilities

Designated parking provision for sports facilities should be determined according to the usage of the sports facility.

NOTE 1 Detailed guidance on parking provision for sports facilities can be found in the Sport England publication Accessible sports facilities [19].

NOTE 2 Flexibility for additional temporary close-proximity parking might be required for specific events where a higher number of disabled people are likely to attend. Additional guidance on parking for temporary external events is given in Annex D.

7.4.7 Multi-occupancy residential buildings

The level of provision of designated spaces in multi-occupancy residential buildings should be in accordance with BS 9266:2013, Clause **5**.

7.5 Access to, and location of, designated off-street parking spaces

Designated accessible parking spaces in uncovered parking areas should be located on firm and level ground, as close as is feasible to the accessible entrance to the building with which the parking spaces are associated. Access routes to designated off-street parking spaces should be in accordance with Clause **8**.

The longer a pedestrian route, the greater difficulty it can present to many people. As such, designated accessible parking spaces should normally be within 50 m of an accessible entrance (see Note 2).

NOTE 1 For the purposes of this subclause, "level" is taken to mean a surface with a gradient of less than 1:60.

NOTE 2 In some circumstances, the most suitable location for designated accessible parking spaces might not be near to the building entrance, for example large sports stadia or retail developments. Where this is the case, seating at intervals not greater than 50 m along the accessible route, which is preferably covered, would make the approach to a building more manageable for disabled people.

NOTE 3 In some instances, accessible parking can be distributed between the alternative accessible entrance and the main entrance even if not accessible to people who cannot negotiate steps, as some disabled people find a stepped entrance accessible.

NOTE 4 Provision of shelter from the elements when exiting or entering a vehicle is advantageous.

7.6 Design and layout of designated off-street parking spaces

Space should be available to enable a disabled motorist or passenger to open the car door fully, to get in or out of the vehicle, and to manoeuvre around vehicles that are parked perpendicular to the carriageway, as shown in Figure 4.

Figure 4 — *Access around designated off-street parking spaces*

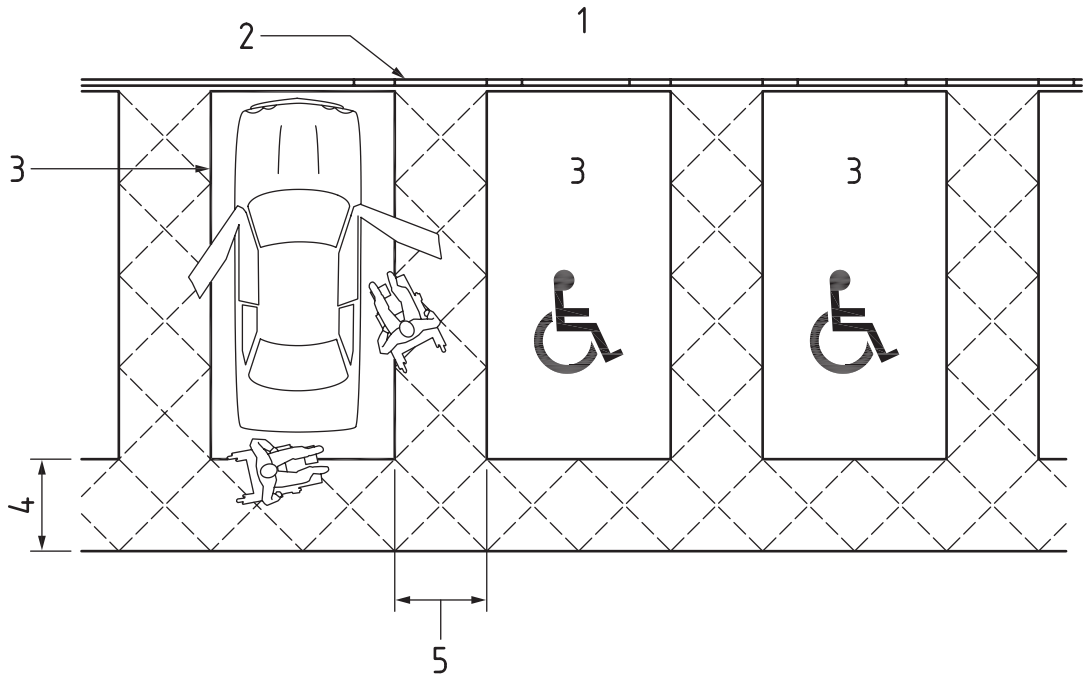

Key

1 Preferred access route avoiding travel behind parked cars
2 Dropped kerb or level access
3 Standard 2 400 mm × 4 800 mm designated accessible parking space
4 1 200 mm wide safety zone for boot access and cars with rear hoists, outside the traffic zone
5 1 200 mm wide marked access zone between and at either end of designated accessible parking spaces

A zone of 1 200 mm wide should be provided between designated accessible parking spaces and between the designated spaces and a roadway (without reducing the width of the roadway) to enable a disabled driver or passenger to get in or out of a vehicle and access safely the boot, rear hoist

 © THE BRITISH STANDARDS INSTITUTION 2018 – ALL RIGHTS RESERVED

Licensed copy: Aston University OpenAthens , Aston University, Version correct as of 25/03/2020

or rear access ramp. These zones should be marked as shown in Figure 5, with durable markings contrasting visually with the surface to which they are applied.

*NOTE Access to the rear or side of a vehicle by hoist or ramp requires extra space. The provision of a large designated accessible parking space 4.8 m wide × 6 m long benefits people using hoists or ramps to access their vehicles (see **7.4.1** and Table C.2).*

Figure 5 — *Markings for multiple designated off-street parking spaces*

Dimensions in millimetres

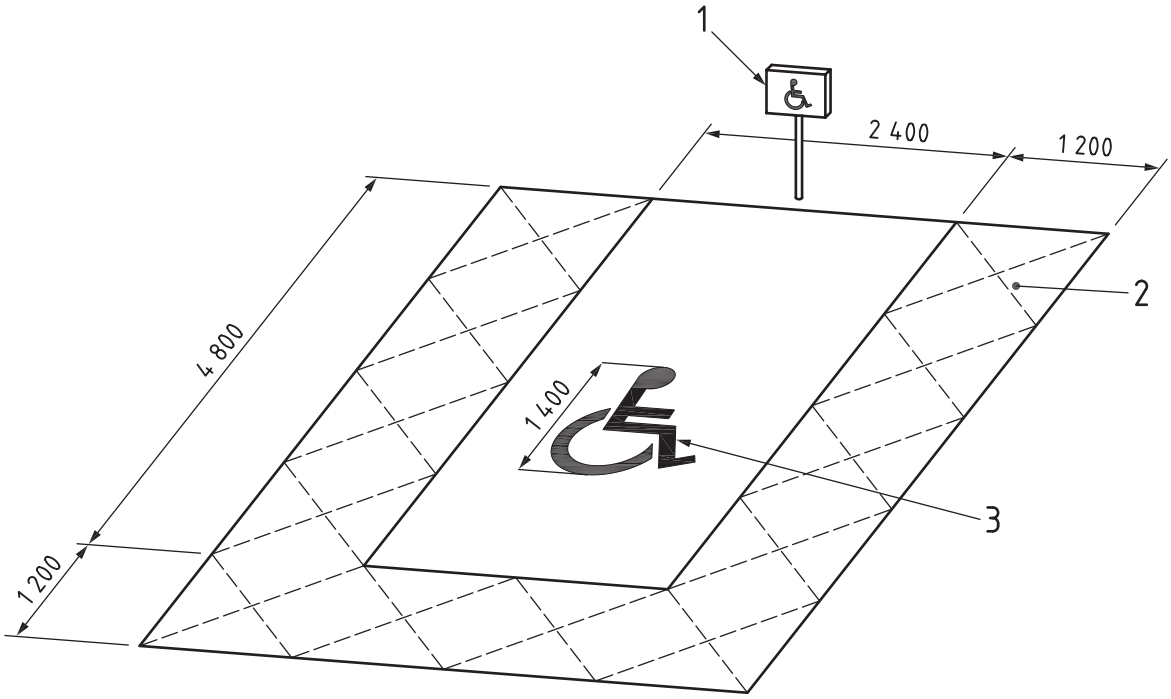

Key

1 Sign, with its lower edge 1 000 mm above the ground, to identify parking space when road markings are obscured, e.g. by snow or fallen leaves, with the words "Blue Badge holders only"

2 1 200 mm wide access zone between designated accessible parking spaces

3 International Symbol for Access (see BS 8300-2:2018, Figure 9)

NOTE Dimensions of parking space are to centre lines of markings.

The surface of the access and safety zones of a designated off-street parking space should be in accordance with Clause **8**.

Access routes to and from designated accessible parking spaces should be in accordance with Clause **6**.

Any planting in proximity to parking spaces should be in accordance with **10.9**.

If designated parking places are required parallel to the carriageway, they should have the dimensions and markings shown in Figure 3.

Lighting at designated accessible parking spaces, and on access routes to and from the car parking space, should be in accordance with Clause **11**.

7.7 Multi-storey car parks

Designated accessible parking spaces should be clearly signposted. Where practicable they should be at the same level as the accessible entrance to the building or the main access route to and from the car park. If this is not feasible, a conventional passenger lift or ramp should be provided, linking

Licensed copy: Aston University OpenAthens , Aston University, Version correct as of 25/03/2020

the different levels. Pedestrian ramps should be in accordance with 9.2 and lifting appliances in accordance with 9.4.

Signs should be provided, indicating the accessible route to the ticket machine, to the lift, to the storey and final exits and then, if appropriate, to the building being visited.

NOTE It is preferable for a disabled person not to pass behind a parked vehicle, other than his or her own vehicle, nor to use a vehicular route when approaching the accessible entrance to the building.

7.8 Garaging and enclosed parking spaces

Garaging and individual enclosed parking spaces for disabled motorists should be level, accessible and under cover. Vehicle access to the spaces, including the vehicular entrance and the ceiling level, should allow access to high-top vehicles and cars fitted with a roof-top hoist cabinet, permit the use of a wheelchair hoist, and have a vertical clearance of not less than 2.6 m.

A single garage or enclosed parking space for use by a motorist who is a wheelchair user should be large enough to allow the wheelchair user to turn around at the side of the vehicle, to access the rear of the vehicle and to get into and out of the space. The space available should also be sufficient to allow a non-disabled person to alight and then, if necessary, to assist a disabled companion to get out of the vehicle and into his or her wheelchair.

Where power-operated doors are fitted to the entrance of a garage or enclosed parking space, they should be operable from inside the vehicle.

The dimensions of a garage or enclosed parking space for use by a wheelchair user and an ambulant driver should be as shown in Figure 6.

Figure 6 — *A garage designed for a wheelchair user and an ambulant driver*

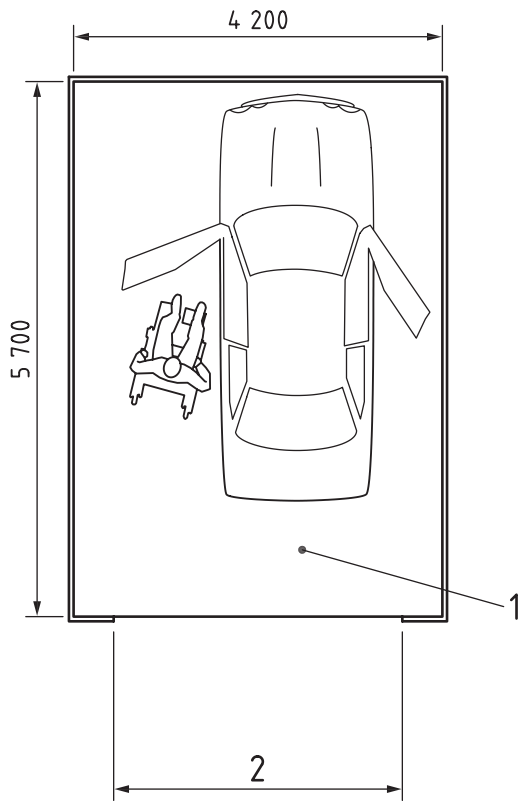

Dimensions in millimetres

Key

1 Space for wheelchair access at the rear of the vehicle

2 Full width door opening provides flexibility in positioning the car within the space and therefore allows wheelchair transfer from either driver or passenger side

NOTE An increase in width of 750 mm is needed if both driver and passenger are wheelchair users.

Licensed copy: Aston University OpenAthens , Aston University, Version correct as of 25/03/2020

 © THE BRITISH STANDARDS INSTITUTION 2018 – ALL RIGHTS RESERVED

Licensed copy: Aston University OpenAthens , Aston University, Version correct as of 25/03/2020

7.9 Electric vehicle charging

Where charging points for electric vehicles are provided, equivalent provision should also be made for designated accessible spaces.

7.10 Mobility services and provision for electric mobility scooters

Mobility services should be located within 50 m of designated accessible car parking spaces, where a customer service point should be provided to administer the rental and return of electric mobility scooters.

Suitable provision should be made for storing and charging electric mobility scooters.

7.11 Entrances to car parks, and parking controls

7.11.1 General

Designated accessible parking spaces should have a firm, level surface, with level access to a marked-out pedestrian-accessible route to the destination(s) they serve or, in the case of multi-storey car parks, to a conventional passenger lift (see **9.4**).

NOTE In parkland or historic settings a different approach might be required, with the mixed use of indigenous materials, e.g. setts/cobbles or gravel for the car areas and a hard surface for the transfer zone and pedestrian path routes where necessary.

7.11.2 Signs to designated accessible parking spaces

A sign or, if appropriate, signs should be provided at the entrance to each car park and at each change in direction to direct motorists to the relevant designated accessible parking spaces.

*NOTE Further guidance on signage is given in **8.3**.*

7.11.3 Information

Information on the conditions and requirements for parking, including height restrictions, payment terms, cost, payment methods, contact details for support, etc., should be clearly displayed at the entrance to a car park and should be in accordance with **8.3**.

7.11.4 Barrier control systems

*COMMENTARY ON **7.11.4***

Ticket, swipe card or key-activated entrance barrier controls to private car parks are often difficult to reach and to manipulate by drivers with limited dexterity. Dual control systems, i.e. having barrier control panels at two different heights, can assist such people; remote control systems are another option for regular users.

Ticket, swipe-card or key-activated systems for car park barriers should be operable by the driver without leaving the car. No plinth should extend into the carriageway by more than 50 mm beyond a line taken vertically from the front face of the control panel.

Means of calling for assistance should be provided, e.g. a call button located on the barrier control panel. An emergency telephone number should also be displayed at the barrier. For the benefit of people who are Deaf or hard of hearing, the phone system at the security control point should be capable of receiving texts, or a phone number which is continuously monitored should also be displayed, as an alternative method of receiving a texted call for assistance.

*NOTE Information on the use of LED displays for entryphones is given in BS 8300-2:2018, **8.5.2**.*

Licensed copy: Aston University OpenAthens , Aston University, Version correct as of 25/03/2020

7.11.5 Height restriction

Any vehicle height barrier should provide a vertical clearance on level ground of 2.6 m from the carriageway to allow the passage of a high-top conversion vehicle.

The vertical clearance of 2.6 m should be maintained from the entrance of the car park to (and including) the designated accessible parking spaces and exits from those spaces. The effect of driving a long wheelbase vehicle over any humps or onto a slope should be taken into account when checking the effective vertical clearance.

Height restrictions should be clearly signposted at a point before drivers begin to enter the car park, and there should be space to turn or reverse without causing an obstruction. For existing car parks, if it is not feasible to maintain the recommended vertical clearance along the route, there should be directions to suitable alternative designated accessible parking spaces.

NOTE Provision for vehicles with roof-top boxes can most easily be arranged by providing a clear route with a minimum height of 2.6 m from the entrance to the designated accessible parking spaces and thence directly to the exit, thus minimizing the amount of space required for increased head room.

7.12 Parking meters, payment systems and ticket dispensers

7.12.1 Pay-and-display systems

Where a pay-and-display system is in operation and free parking is not provided for disabled people, a suitably designed pre-payment machine should be provided conforming to BS EN 12414. The pre-payment machine (e.g. a ticket dispenser) should be positioned close to the designated accessible parking space or spaces.

There should be alternative accessible payment arrangements available in the event of failure of a pre-payment machine.

7.12.2 Ticket dispensers

Ticket dispensers should be easily identified and contrast visually with the background against which they will be seen. The operating buttons/controls should contrast visually with the background material of the dispenser.

NOTE 1 It is desirable for ticket dispensers to be operable using audible information via headphones and physical keypad.

Where there is a charging system for designated accessible parking spaces and only one ticket dispenser is provided, the height above ground of the controls, and of slots for coins or cards, should be at least 750 mm and not more than 1 200 mm, as shown in Figure 7. The dispenser should be located as close as possible to the designated spaces, on a route that is clear of obstructions, and in such a position as to allow clear access to the dispenser by a wheelchair user.

Where more than one ticket dispenser is provided, the height of the controls on the additional dispensers may be between 1 000 mm and 1 400 mm (see BS 6571-6), for use by non-wheelchair users. However, at least one ticket dispenser for use by wheelchair users should always be provided.

NOTE 2 Where there is no charging system for designated accessible parking spaces, a low-level ticket dispenser would still be of assistance to those people of short stature who do not have a Blue Badge.

There should be alternative accessible ticketing arrangements available in the event of failure of an accessible ticket dispenser.

The space in front of a meter or a ticket dispenser associated with a designated accessible parking space, or designated accessible parking spaces, should be level, free from obstruction, and of the dimensions shown in Figure 7.

 © THE BRITISH STANDARDS INSTITUTION 2018 – ALL RIGHTS RESERVED

The plinth below a ticket dispenser should not restrict the ability of a wheelchair user to operate the equipment, and should not project beyond the face of the equipment in a way which prevents convenient access.

Figure 7 — *Key dimensions relating to ticket dispensing machines for use by wheelchair users*

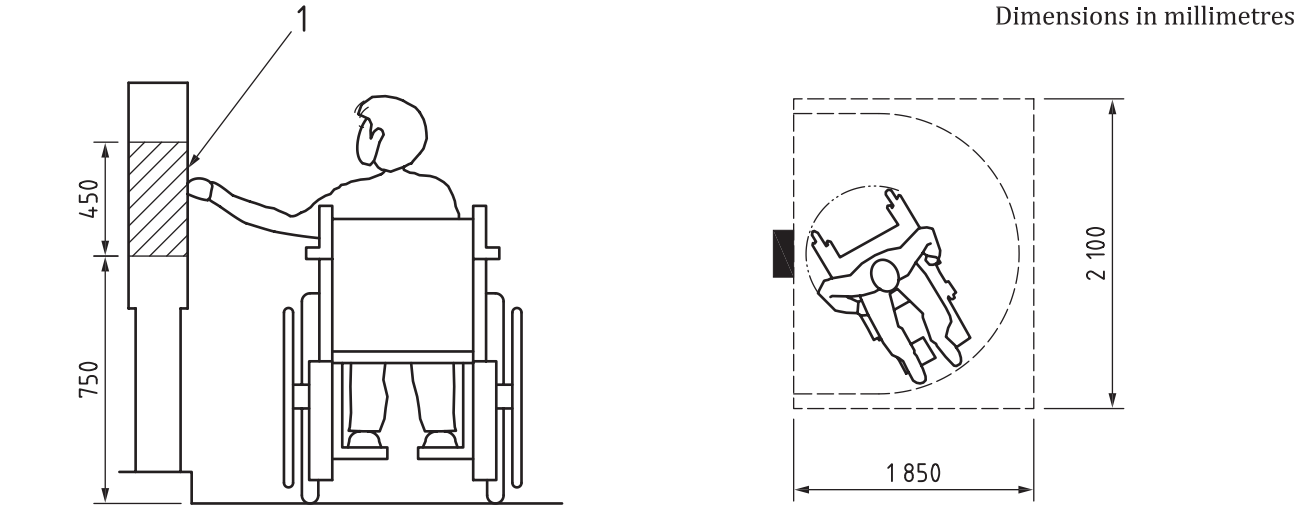

a) Height of controls and slots above the ground

b) Plan view - clear space to approach, manoeuvre side on to the machine, then turn and return to the vehicle

Key

1 450 mm high zone for control buttons, coin slot and ticket release

8 Horizontal movement

8.1 Access routes

*COMMENTARY ON **8.1***

It is important to restrict the number of barriers, restrictions or other hazards that disabled people encounter. Low-level bollards and chain-linked posts, for example, are particularly hazardous to people who are blind or partially sighted. Similarly, surface decorations that can give the illusion of steps, e.g. coloured bands running transverse to the direction of travel or surface treatment of steps that give the illusion of a continuous surface, can also be hazardous to people who are blind or partially sighted and wheelchair users viewing from a lower level. Very dark areas of surfacing can appear like a hole to some people.

For disabled people who need a generous amount of space when moving about, the provision of narrow approaches creates difficulties. Uneven surfaces, surfaces of loose materials (e.g. unbonded gravel) and large gaps between paving materials cause problems for wheelchair users, people who are blind or partially sighted and people who are, generally, unsteady on their feet. Street furniture, flower tubs, litter bins and signposts are all intended to improve the environment but, whether free-standing or projecting from a building, they are hazardous if not carefully designed and positioned. Similarly the use of uncontrolled advertising "A" boards, residential refuse bins awaiting collection, etc., located within pedestrian routes can create difficulties.

People with sight loss, as well as visitors who might be unfamiliar with a location, can be assisted if street layouts are designed to provide a strong, legible framework with unobstructed sight lines supported by orientation features such as distinctive shop fronts and artworks. If pedestrian routes are designed to be easily identifiable, and direct and convenient to assist way-finding to adjacent areas, the need for elaborate signage can be minimized.

Licensed copy: Aston University OpenAthens , Aston University, Version correct as of 25/03/2020

Sensory clues, whether through touch, smell or sound, can assist with navigation for people who are blind or partially sighted and people who have sensory/neurological processing difficulties. See http://www.sensorytrust.org.uk *for more information.*

8.1.1 General

To assist people who are blind or partially sighted, the siting of hazards should be easily detected during the sweep of a cane and there should be a good visual contrast with the background against which they will be seen, to reduce the risk of collision along access routes. Upstands should be a minimum of 150 mm in height, which can then act as a tapping rail for long cane users as well as a safeguard for wheelchair users. There should also be no projections or overhangs that could pose a hazard.

Continuous accessible routes should be provided in the following locations:

a) from public transport stops, cycle parking and designated accessible car parking spaces to all accessible entrances to sites and buildings;

b) to and from facilities associated with, and in the immediate vicinity of, buildings, including emergency egress assembly points (see BS 9999);

c) between accessible entrances and any other subsidiary entrances and buildings, if external movement is provided between them;

d) between buildings.

Access routes should not contain steps, stairs, turnstiles, revolving doors, escalators or other features which constitute a barrier to disabled people, unless a suitable means for bypassing the barrier has been provided close by and is always available for use.

*NOTE Many people with a mobility impairment find navigating long sloped routes challenging and therefore alternatives such as conventional passenger lifts or stairs would be beneficial, where appropriate. Recommendations for vertical movement are given in Clause **9**.*

The location of emergency egress points should not cause difficulties for disabled people, particularly people with limited mobility and people who are blind and partially sighted.

Access routes on level ground should have resting places not more than 50 m apart for people with limited mobility (see **10.7**).

Lighting of access routes should be in accordance with Clause **11**.

8.1.2 Width and height of an access route

To be accessible, the minimum surface width of an access route (i.e. between walls, kerbs or path edgings) should be at least 1 800 mm for general routes (see Note 1), although a width of 2 000 mm is preferable to accommodate larger electric mobility scooters.

NOTE 1 The minimum space required for two wheelchair users to pass each other on an access route is 1 800 mm, as shown in Annex E.

These widths should be maintained up to a height of at least 2.5 m above ground level, subject to the recommendations regarding hazard protection set out in **8.2.2**.

NOTE 2 The clear unobstructed height is given as a minimum for external realms so as to allow for the greater likelihood of people carrying children, goods, building materials, etc.

NOTE 3 Sports facilities have their own requirements for widths of access routes (see Accessible sports facilities [19]).

NOTE 4 Vegetation along access routes can be a particular hazard. Guidance on the management of vegetation is given in Annex A.

 © THE BRITISH STANDARDS INSTITUTION 2018 – ALL RIGHTS RESERVED

Licensed copy: Aston University OpenAthens , Aston University, Version correct as of 25/03/2020

Licensed copy: Aston University OpenAthens , Aston University, Version correct as of 25/03/2020

Elements such as eaves to single storey buildings or sculptures with overhanging features that are lower than 2.5 m should not protrude into pedestrian routes by more than 150 mm.

Widths of access routes for events where crowds are expected should be suitable for disabled people to use safely and conveniently.

NOTE 5 Guidance is given in Managing crowds safely – A guide for organisers at events and venues [20] and CIRIA publication C675 [21].

8.1.3 Passing places on access routes

Where the surface width of an access route is less than 1 800 mm, passing places should be provided to allow two wheelchair users to pass each other. Passing places should also be provided at junctions (e.g. corners) along an access route.

A passing place should be 2 000 mm long ×1 800 mm wide and located within direct sight of another passing place, or at a maximum distance of 25 m from another, whichever is the closer.

Where it is necessary to introduce occasional narrowing of the access route, the restricted width should be at least 1 200 mm and should extend for not more than 2 m in length (see Figure 8). However, measures should be taken to prevent narrowing being a hazard (see **8.2.2**).

Figure 8 — *The design of access routes*

Dimensions in millimetres

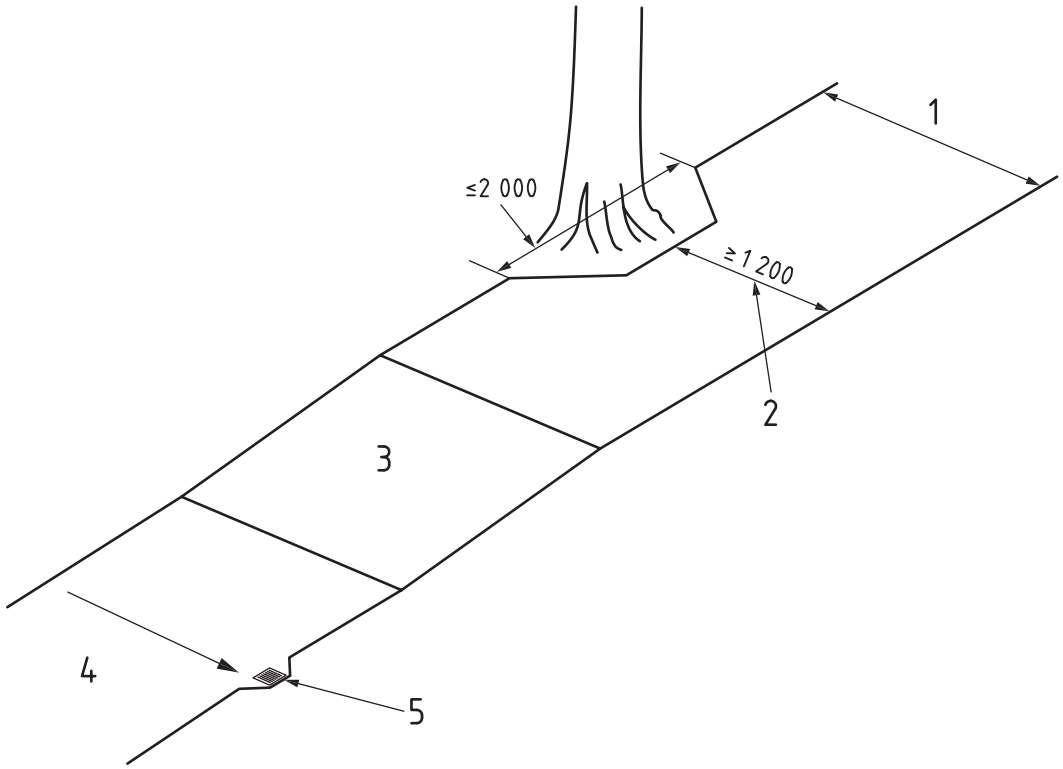

Key

1 1 800 mm minimum to allow two wheelchairs to pass each other

2 Width reduced to 1 200 mm minimum for not more than 2 m in length around existing obstructions

3 Gradient in accordance with **8.1.4**

4 Cross-fall gradient not more than 1:50

5 Drainage gratings offset from access route

Licensed copy: Aston University OpenAthens , Aston University, Version correct as of 25/03/2020

8.1.4 Gradients

An access route should either be level along its length or (where the topography of the land prevents this) should be gently sloping or incorporate a ramp or ramps in accordance with **9.2**. Where the change in level is sufficient to avoid a single step, a stepped approach should also be provided (see **9.1**).

NOTE 1 It is assumed that a gradient of 1:60 or less steep is level; steeper than 1:60 (but less steep than 1:20) is gently sloping; and 1:20 or steeper is a ramp.

Where an access route has a gradient steeper than 1:60, but not as steep as 1:20, it should usually have a level landing for each 500 mm rise of the access route. On access routes with a gradient not steeper than 1:30, a level resting place adjacent to the route may be provided as an exception. A level landing should also be provided wherever a change of direction occurs.

The cross-fall gradient across a level access route should not exceed 1:50, except when associated with a dropped kerb or adjacent resting place.

Where there is no cross-fall to a landing, there should be adequate draining to ensure that there is no ponding at the foot of a ramp or slope.

NOTE 2 While it is acknowledged that cross-fall gradients present difficulties for wheelchair users, there is the risk that surface water will form puddles then freeze unless a cross-fall gradient ensures effective drainage.

8.2 Hazards on an access route

8.2.1 Street furniture

8.2.1.1 Location of street furniture

*COMMENTARY ON **8.2.1.1***

For many users, a clear unobstructed pedestrian environment is essential in terms of creating a usable and inclusive space.

A poorly planned and designed pedestrian environment can be difficult for many people to negotiate and navigate in terms of the positioning of street furniture and other obstructions.

Clear pedestrian routes need to be maintained via management policies/procedures to prevent obstructions being introduced (see Annex A).

Street furniture, such as signposts, litter bins, seats, service outlets and utility cabinets, should wherever possible be located at or beyond the boundaries of an access route.

If it is necessary to locate items of street furniture within an access route, their presence should be clearly apparent, e.g. by ensuring that they contrast visually with the background against which they will be seen in both wet and dry conditions.

They should also be located in line with each other along the length of the route, to create a predictable readable arrangement.

A clear access route should be provided with a width not less than that recommended in **8.1.2**. This route should incorporate a continuous detectable physical edge which people who are blind or partially sighted can follow (see **5.2.2**).

8.2.1.2 Low-level walls and free-standing posts and columns

Low-level walls, typically below 1 000 mm, should contrast visually with the background against which they are seen; should not hide changes in level; and should not present a trip hazard.

 © THE BRITISH STANDARDS INSTITUTION 2018 – ALL RIGHTS RESERVED

Licensed copy: Aston University OpenAthens , Aston University, Version correct as of 25/03/2020

Each free-standing post, e.g. a lighting column, within an access route should contrast visually with the background against which it is seen.

NOTE 1 It is desirable also to incorporate a band, 150 mm high, whose bottom edge is 1 500 mm above ground level, and which contrasts visually with the remainder of the column or post.

Free-standing columns that support an entrance canopy should not be positioned within the width of an access route.

Low-level posts, e.g. bollards, should not be located within an access route. They should be at least 1 000 mm high and should contrast visually with the background against which they are seen.

NOTE 2 It is desirable also to incorporate a 150 mm deep contrasting strip at the top of low-level posts and bollards.

They should not be linked with chains and should have no horizontal projections; they may taper towards the top but should not taper towards the ground.

NOTE 3 Further guidance is available in Inclusive mobility – A guide to best practice on access to pedestrian and transport infrastructure [15].

Many buildings require a high degree of perimeter protection. Where bollards, features and planters are used to create protective distance, the effective clear width between such features should be not less than 1 200 mm.

Any street furniture, including bollards, and any free-standing posts and columns, should not have a highly reflective finish.

8.2.1.3 Cycle stands

Cycle stands should be positioned such that when in use (i.e. when a cycle is placed on one of them), they do not reduce the access route width below that recommended in **8.1.2**.

NOTE Building management can ensure that access routes are clear from obstruction such as parked cycles. The provision of appropriately located cycle stands can avoid building elements on access routes, such as handrails to ramps and guarding, from being used as informal cycle parking.

8.2.1.4 Utility cabinets

Utility cabinets should be located at or beyond the boundaries of an access route, in line with other items of street furniture, minimizing inconvenience or obstruction caused for pedestrians.

They should contrast visually with the background against which they will be seen, and should not reduce the access route width below that recommended in **8.1.2**.

Utility cabinets should be at least 1 000 mm high, and should have a consistent width up their height to ensure accurate ground level detection.

8.2.1.5 Drainage channels and service outlets

*COMMENTARY ON **8.2.1.5***

Drainage channels and service outlets/covers can be particularly problematic for people using mobility aids such as sticks, canes, wheelchairs or wheeled walking frames.

Drainage channels and service outlets/covers should be positioned such that they do not form a hazard.

They should be slip-resistant with similar frictional characteristics to the surrounding ground surface, in both wet and dry weather conditions.

If feasible, drainage gratings should be positioned beyond the boundaries of the access route. Gratings within an access route should be set flush with the surrounding surface.

Licensed copy: Aston University OpenAthens , Aston University, Version correct as of 25/03/2020

Slots in gratings should be not more than 13 mm wide and should be set at right angles to the dominant line of travel.

Circular holes in gratings should have a diameter not more than 18 mm.

NOTE This is intended to reduce the risk of trapping the ends of canes and of wheelchair wheels becoming stuck.

Open-top and dished channels should not be incorporated within an access route as they increase the risk of tripping.

8.2.1.6 Waste bins

Bins should be positioned to be recognizable, convenient and usable, but they should not reduce the access route width below that recommended in **8.1.2**.

Waste bins should have a minimum height of 1 000 mm from ground level, with a bin opening 1 000 mm from ground level.

Bins should be detectable at ground level, incorporating a consistent profile throughout their height from ground level, or a form of ground level detection, plinth or tapping rail should be provided to assist people who are blind or partially sighted in detecting the bin.

Developments should incorporate sufficient and conveniently placed storage facilities for waste bins, where waste bins can be secured and easily accessed away from the pedestrian environment and pedestrian routes, to prevent them providing an obstruction to pedestrians or a narrowing of pedestrian routes.

NOTE Guidance on waste management is given in Annex A.

8.2.1.7 Tree grilles

*COMMENTARY ON **8.2.1.7***

Tree grilles can be particularly problematic for people using mobility aids such as sticks, canes, wheelchairs or wheeled walking frames, or for people with assistance dogs.

Tree grilles should be avoided. Smooth or paved permeable surfaces should be used wherever practicable.

8.2.2 Provision of hazard protection

8.2.2.1 Hazard protection within an access route

Any feature which could constitute a hazard should wherever possible not project into or be located within an access route. However, if this is unavoidable, hazard protection should be provided unless objects:

a) project not more than 100 mm into an access route, or not more than 100 mm from their base if the base projects not more than 100 mm into the access route; or

b) project more than 100 mm into an access route, but their lower front edge is less than 300 mm above the ground and their upper front edge is at least 1 200 mm above the ground (see Figure 9).

 © THE BRITISH STANDARDS INSTITUTION 2018 – ALL RIGHTS RESERVED

Figure 9 — *Projections into an access route that do not need hazard protection*

Dimensions in millimetres

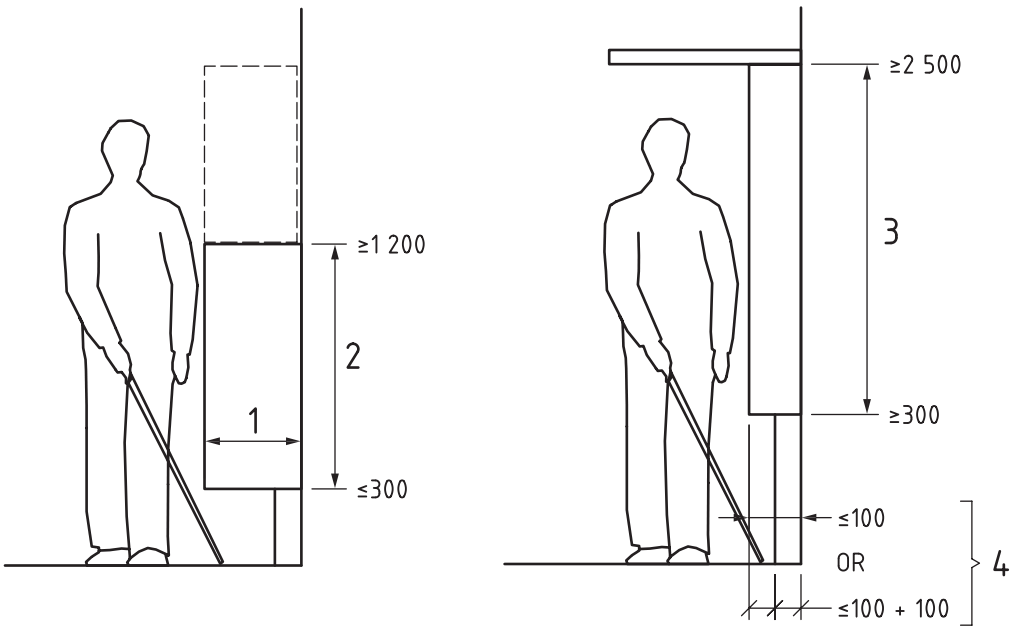

Key

1 Object projecting into an access route

2 No hazard protection required where the lower front edge of a projecting object is less than 300 mm, and the upper front edge of the object is at least 1 200 mm, above the ground

3 No hazard protection required where an object projects into an access route between 300 mm and 2 500 mm above the ground by not more than 100 mm, or by not more than 100 mm in front of its base where the base projects not more than 100 mm into the access route

4 Projection of an object in front of its base

Visual contrast should be provided regardless of whether or not hazard protection is needed.

Hazard protection should be provided if objects project more than 100 mm into an access route and their lower front edge is more than 300 mm above the ground (see Figure 10).

Hazard protection associated with such objects should take the form of a tapping rail with its underside not higher than 150 mm above ground level, or an upstand at least 150 mm high (or similar barrier), to enable a person who is blind or partially sighted to detect it using a cane.
The hazard protection should not extend beyond the front edge of the object, nor should it be set back more than 100 mm from its front edge. It should contrast visually with the surrounding background against which it will be seen.

In addition to a means of cane detection, guarding at a level between 900 mm and 1 100 mm from the surface of the accessible route should be installed each side of the obstruction (see Figure 10).

Water features can present a significant hazard and should not be positioned within access routes without adequate protection (see **10.8**).

Licensed copy: Aston University OpenAthens , Aston University, Version correct as of 25/03/2020

Figure 10 — *Projections into an access route that need hazard protection*

Dimensions in millimetres

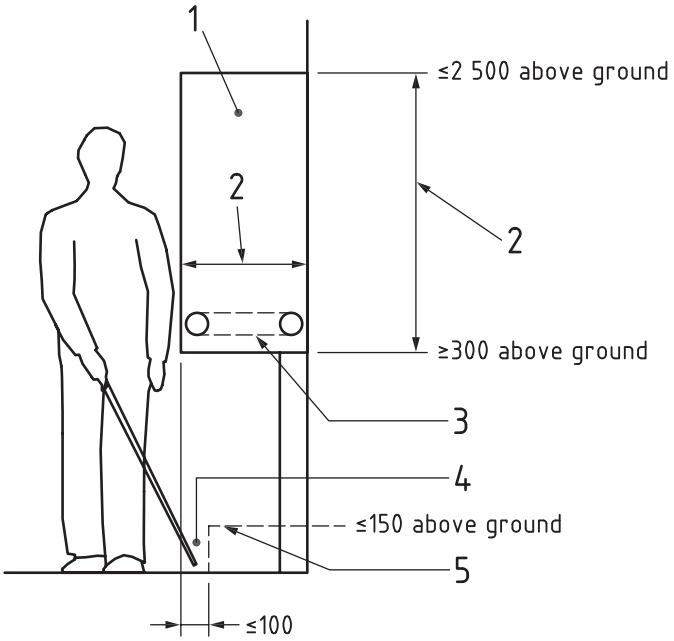

Key

1 Hazard such as:
- open window;
- building projection;
- telephone booth

2 Cane detection required where an object projects into an access route between 300 mm and 2 500 mm above the ground by more than 100 mm, or by more than 100 mm in front of its base

3 Guarding each side of the obstruction in addition to cane detection

4 Not more than 100 mm between the front face of an object and the tapping rail

5 Tapping rail, with its underside not higher than 150 mm above ground level, to provide cane detection

8.2.2.2 Hazard protection beneath stairs and ramps

Where possible, areas below stairs or ramps should be enclosed where the soffit is less than 2.1 m from ground level.

At any point where the clear height is less than 2.1 m, and the area below the soffit is not enclosed, the risk of people colliding with the underside of a ramp or stair should be limited by providing:

a) a protective guardrail and low-level cane detection; or

b) a continuous barrier, e.g. a raised flower bed which extends at least 900 mm above ground level.

NOTE Tapping rails or low kerbs can be a tripping hazard and are to be avoided beneath free-standing stairs.

8.2.2.3 Protection from falling

Where there is a change in level between the access route and the surrounding area, the risk of falling should be assessed, and appropriate measures should be taken to address this.

Licensed copy: Aston University OpenAthens , Aston University, Version correct as of 25/03/2020

Licensed copy: Aston University OpenAthens , Aston University, Version correct as of 25/03/2020

8.3 Information and signage

8.3.1 General

Routes to, and the location of, key accessible facilities such as parking, transport hubs, information centres and sanitary facilities, should be clearly indicated as part of the overall signage strategy.

Directional signs should specifically identify routes that are accessible and step-free, and should give as much information as possible to assist people in planning and navigating their route, including distances and gradients where appropriate.

Signage should reaffirm directions on a route that continues over a long distance or at changes in direction.

The shape, materials, colour and typeface of signs should be consistent throughout an area.

*NOTE 1 Recommendations for the design and size of lettering and symbols are given in BS 8300-2:2018, **12.3.1**. The Sign design guide [22] also gives recommendations for information and signage.*

NOTE 2 Regular cleaning and maintenance of signage and information panels is necessary to ensure that they remain clearly legible and up to date. Guidance on cleaning and maintenance is given in Annex A.

8.3.2 Location

Information and signage should be located where it is clearly identifiable and visible from all directions. Lighting should be in accordance with Clause **11**.

Signage should not be placed within pedestrian routes where it could form an obstacle, or where it might be obscured and missed, for example on low-level walls, within a shrubbery or hidden by vehicles.

NOTE 1 Guidance on "A" board signs is given in Annex A.

Accessible orientation ("you are here") information plans should be provided in accessible places, alongside main accessible routes, and positioned in a space out of the pedestrian flow that allows for people to stop and study this without restricting access routes. Maps should indicate North, and should incorporate tactile embossing and audible information.

Where audible information is provided, assistive listening systems such as an induction loop should be provided for hearing aid wearers as well as a headphone socket (where possible) for personal headphone use. Wherever practicable, this should be in a quiet area where background noise will not make it difficult to hear the information. The presence of such systems should be indicated by appropriate signage.

*NOTE 2 Recommendations for assistive listening systems are given in BS 8300-2:2018, **13.2**.*

8.4 Pedestrian surfaces

8.4.1 General

An access route should have a firm, slip-resistant and reasonably smooth surface. Cobbles, bare earth, sand and unbonded gravel should not be used.

NOTE 1 For guidance on slip resistance, see Annex F.

Although visual contrast is very useful in enabling partially sighted people to perceive boundaries, bold surface patterns can be disorientating or misleading, and should therefore be avoided.

NOTE 2 The use of colour, patterning, lettering and imagery on pedestrian surfaces can be particularly problematic for people who are blind or partially sighted and people who have sensory/neurological processing difficulties.

Licensed copy: Aston University OpenAthens , Aston University, Version correct as of 25/03/2020

With the exception of recognized tactile paving surfaces, undulations in the surface of paving, whether paving slabs, split York stone, blocks, bricks or formless materials such as concrete or asphalt, should not exceed 3 mm under a 1 m straight edge.

The joints between adjacent paving units or utility access covers and paving units should be finished using any of the following techniques.

a) Where joints are filled to the surface, the difference in level between adjacent units should be not more than twice the joint width, subject to a maximum difference in level of 5 mm.

b) Where the joints are filled but recessed below the surface, the difference in level between adjacent units should be not greater than 2 mm, with the joints not wider than 10 mm and the recess not deeper than 5 mm.

c) Where the joints are unfilled, the difference in level between adjacent units should be not greater than 2 mm, with the joints not wider than 5 mm.

8.4.2 Tactile paving

Appropriate tactile paving should be used, where necessary, on access routes to provide warning, guidance or information to people who are blind or partially sighted.

There are different types of tactile paving. To avoid confusion for people who are blind or partially sighted, each type is designed to convey specific information and should only be used in accordance with *Guidance on the use of tactile paving surfaces* [N1].

8.4.3 Deterrent paving

*COMMENTARY ON **8.4.3***

Deterrent paving is designed to prevent use of an area by means of a surface profile that forms a visual and physical deterrent to pedestrians and vehicles.

The use of deterrent paving should be avoided in the immediate vicinity of access routes. Where its use adjacent to an access route is unavoidable, measures should be taken to minimize the risk of harm to users.

Where deterrent paving is used, it should contrast visually with the surrounding surfaces.

8.5 Gates, barriers and restrictions

8.5.1 Gates

Any side-hung gate on an accessible route should be capable of opening in both directions and of being opened easily with either hand, and should be self-closing.

NOTE 1 A gate that is self-closing under its own weight is preferable to one with a sprung hinge.

The catch to any gate should not require the user to have to pinch or twist their hand to operate.

NOTE 2 If the catch can be operated with a clenched fist it is likely that the design is acceptable.

Gates should be a minimum of 1 000 mm wide, and should have a 300 mm clear space to both the pull and push sides of the leading edge. Gates should be of open construction to allow a user to see another approaching from the opposite side.

Revolving gates, turnstiles, kissing gates and A-frame barriers are not accessible and should not be used unless there is an adjacent alternative accessible route.

 © THE BRITISH STANDARDS INSTITUTION 2018 – ALL RIGHTS RESERVED

Licensed copy: Aston University OpenAthens , Aston University, Version correct as of 25/03/2020

8.5.2 Cattle grids

All cattle grids should provide a gate on a minimum of one side, which should meet the recommendations in **8.5.1**.

NOTE BS 4008 provides guidance on cattle grids.

8.5.3 Fencing and guardrails

Fencing and guardrails should contrast visually with the background against which they will be seen, under a variety of lighting conditions.

They should not be located within a clear pedestrian route minimum width.

They should provide ground level detection for people who are blind or partially sighted navigating using a white cane, in the form of a tapping rail or lower edge with its underside not higher than 150 mm above ground level.

Fencing and guardrails should be at least 1 000 mm high from ground level.

---

9 Vertical movement

9.1 Steps and stairs

*COMMENTARY ON **9.1***

People who are blind or partially sighted risk tripping or losing their balance if unaware of steps, requiring the provision of tactile paving. Tactile paving needs to be placed sufficiently in advance at the head and foot of the steps to allow time to stop and not so narrow that it might be missed in a single stride (see Figure 11).

9.1.1 Protection for stepped access routes

When exposure conditions indicate, weather protection should be provided on a stepped route, e.g. extra horizontal or vertical cover from the greatest risk from precipitation, sun or wind, depending on the context.

NOTE In some external environments the impact and need for protection from wind is greater than the risks from rain, sleet or snow. In some climates or locations the sun is far more of a risk.

The effects of the urban environment should be taken into account, e.g. wind around corners or between large buildings, particularly the cumulative effect of surrounding buildings or trees on the microclimate of the external environment on a stepped route.

9.1.2 Design of steps and stairs

*COMMENTARY ON **9.1.2***

Slips on steps and stairs occur in both ascent and descent, but a slip on descent is more likely to lead to a fall and an injury. Research [23] has shown that slips while descending stairs are more likely to occur when the user oversteps, placing only 50% to 60% of their foot on the tread. The likelihood of an overstep decreases significantly with increased going size, and beyond 300 mm, is very rare. Beyond 350 mm, it is unlikely that a large overstep will occur within the lifetime of the building, even with 2 000 users per day.

Excessively high risers can result in excessive strain being placed on the knee and/or hip joints of ambulant disabled people, when descending flights of stairs.

When ascending a stair, people who wear callipers or who have stiffness in hip or knee joints are particularly at risk of trapping the toes of their shoes beneath projecting nosings, and of tripping as a result. In addition, some partially sighted people can feel a sense of insecurity when looking

Licensed copy: Aston University OpenAthens , Aston University, Version correct as of 25/03/2020

through open treads (e.g. metal grille-type treads), and assistance dogs might refuse to proceed. Some neurological conditions lead to difficulties stepping over open treads and in judging gaps.

Where practicable, the dimensional ranges for steps and stairs should be between 150 mm and 180 mm for the rise and between 300 mm and 450 mm for the going.

The rise and going of each step within a flight should be uniform. Where practicable, the rise and going of each step in a series of flights should also be uniform.

Tapered risers should not be used as people who are blind or partially sighted require an even height riser when ascending or descending. On sites where steps abut a slope, the interface between the slope and the steps should not form part of an access route. In addition, the point at which the tread meets the slope should be clearly identified.

NOTE 1 Steps with tapered risers are sometimes referred to as feathered steps.

Where practicable, a step should not overlap the one below. If there is an overlap, the nosing should not project over the tread below by more than 25 mm.

Treads and risers should be solid and opaque. Riser profiles should be such that people who drag their feet do not trip when ascending.

Where amphitheatre-style seating in excess of three tiers is used, steps should be provided to give access to the seats.

The recommendations for raked seating areas given in BS 8300-2 may be used as a principle on which to base the design of amphitheatre-style seating in the external environment, but the precise details should be determined on a case-by-case basis.

*NOTE 2 Recommendations for raked seating areas are given in BS 8300-2:2018, **17.4**.*

9.1.3 Rise of a flight

Flights on an external stepped access route should not contain more than 20 risers and, where practicable, the numbers of risers in successive flights should be uniform.

NOTE 1 When determining the number of risers in a flight, designers need to strike a balance between the need for landings as resting points and the risk of landings as accident spots.

There should be a minimum 30° change in the direction between flights of stairs if there are more than 36 risers in consecutive flights.

NOTE 2 For longer flights, the risk and injuries in a fall are greater when flights are continuous.

Single steps should be avoided as, even when highlighted using visual contrast, they present a significant trip hazard. Thus, where there is a change in level of two steps or more, it should be treated as a stair and should include handrails each side and all other features of a stair. A stair should always be provided in addition to a ramp, unless the change in level is less than 300 mm, where it would otherwise be necessary to have a single step (see also **9.2.1**).

NOTE 3 The 300 mm dimension assumes a minimum step rise of 150 mm.

9.1.4 Stair width

The surface width of a stair, between enclosing walls, strings, balustrades or upstands, should be not less than 1 200 mm, and the width between handrails should be not less than 1 000 mm.

Where the width between handrails exceeds 2 m, the stair should be divided into two or more channels with a distance between handrails of not less than 1 m, or not more than 2 m, to ensure that all users have access to a handrail.

For stairs used by the general public or designed principally for children, a second handrail should be installed with its top surface 600 mm from the stair landing or pitch line. Where necessary, structural

 © THE BRITISH STANDARDS INSTITUTION 2018 – ALL RIGHTS RESERVED

guarding should be provided that is of sufficient height to prevent a child falling if they climb on the handrail.

9.1.5 Identification and slip resistance of nosings

Each step nosing should incorporate a durable, permanently contrasting continuous material for the full width of the stair on both the tread and the riser to help people who are blind or partially sighted appreciate the extent of the stair and identify individual treads. The contrasting material should extend 50 mm to 65 mm in width from the front edge of the tread and 30 mm to 55 mm from the top of the riser, and should contrast visually with the remainder of the tread and riser.

NOTE 1 Particular care is needed to ensure that there is adequate contrast between nosings and landings.

NOTE 2 Nosing that wraps around the riser might assist people who are blind or partially sighted.

NOTE 3 A proprietary nosing can provide a durable solution that satisfies both visual contrast and slip resistance criteria (see BRE IP 15/03 [24]).

The whole tread or the nosing should incorporate a slip-resistant material.

NOTE 4 Guidance on slip resistance of surfaces is given in Annex F.

Surface material tread and risers should be free from patterning.

NOTE 5 It is beneficial that surface material at landings and floors contrasts with surface material of stairs, subject to maintaining visual contrast at top and bottom nosings.

9.1.6 Landings

A level landing should be provided at the top and bottom of each flight of steps. Its length, clear of any door or gate swing, should be not less than the surface width of the flight.

Unless it is under cover, a landing should have a slight cross-fall gradient, not exceeding 1:50, to help drain surface water.

To give advance warning of a step, tactile paving with a corduroy hazard warning surface (see **3.5**) should be provided at the top and bottom of each flight, excluding intermediate landings with continuous handrails. Where the approach to the stair is wider than the flight, the tactile surface should extend beyond the line of each edge of the flight (see Figure 11).

NOTE Further information on the correct choice of tactile warning surface can be found in Guidance on the use of tactile paving surfaces *[N1].*

9.1.7 Lighting

Lighting of steps and stairs should be in accordance with Clause **11**.

Licensed copy: Aston University OpenAthens , Aston University, Version correct as of 25/03/2020

Figure 11 — *Use of a corduroy hazard warning surface and handrails on an external stepped access*

Dimensions in millimetres

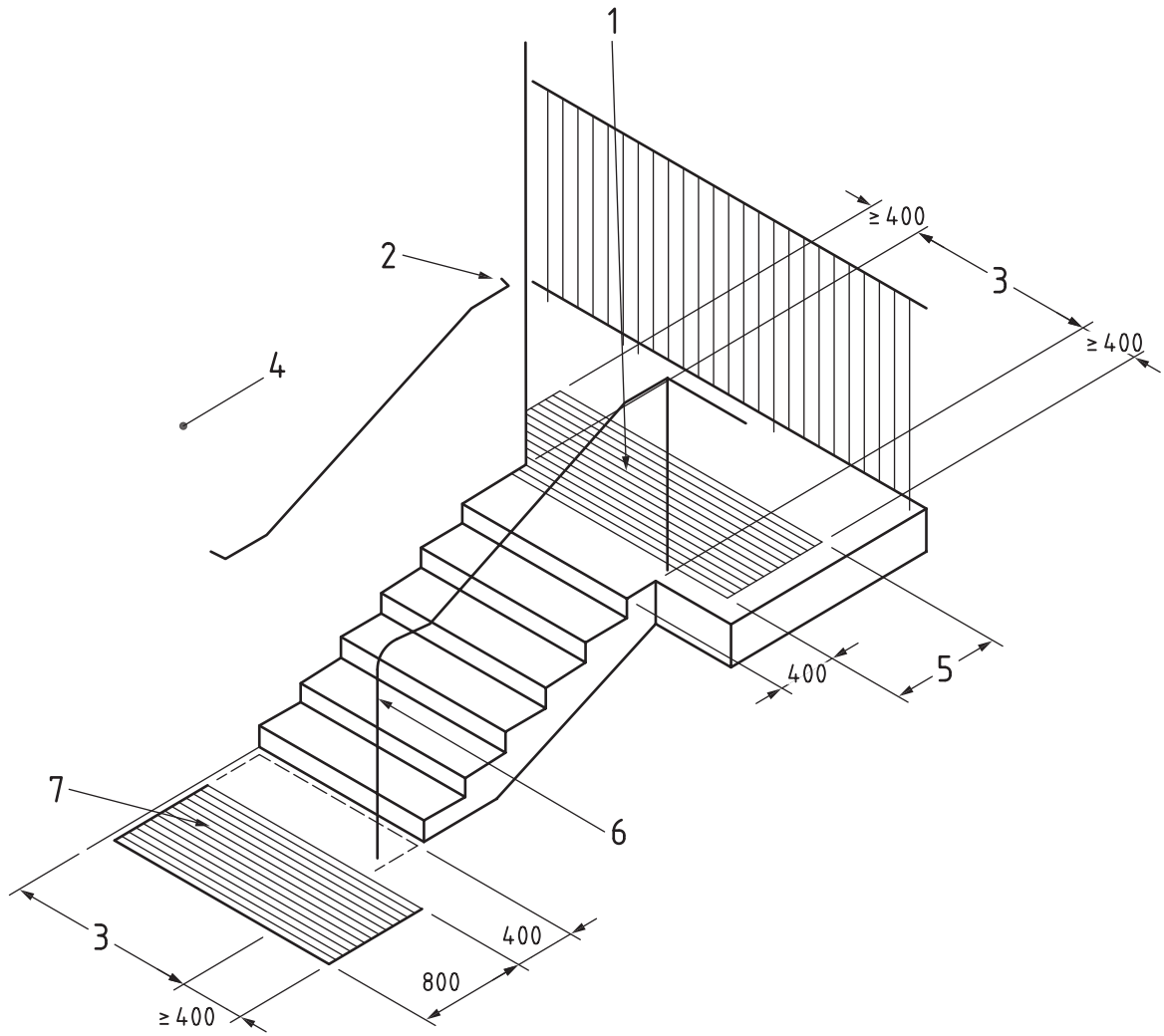

Key

1 Corduroy hazard warning surface at top of stairs to extend at least 400 mm at each side of stairs and to stop 400 mm from nosing

2 Handrail fixed to side wall and terminated with a closed end at top and bottom

3 Surface width of stair, at least 1 200 mm

4 Side wall to staircase

5 800 mm when the approach is straight on and 400 mm when a conscious turn is needed to reach the step

6 Handrail to be terminated in a way that reduces the risk of clothing being caught

7 Corduroy hazard warning surface at bottom of stairs

Licensed copy: Aston University OpenAthens , Aston University, Version correct as of 25/03/2020

 © THE BRITISH STANDARDS INSTITUTION 2018 – ALL RIGHTS RESERVED

Licensed copy: Aston University OpenAthens , Aston University, Version correct as of 25/03/2020

9.2 Ramps

*COMMENTARY ON **9.2***

If a change in level along pedestrian routes is unavoidable, it is necessary to provide gently sloping or ramped options. However, as some people with an ambulant mobility impairment have difficulty using ramps, it is undesirable for a ramp to be the only route.

The key issues in the design of gently sloping or ramped access routes are the gradients of flights and the distances between landings. Where the gradient is too steep or an individual flight too long, a wheelchair user might not have sufficient strength to use the slope. In the same situation, a companion who is pushing a wheelchair user is also likely to encounter the same difficulties. If the gradient is too steep, there is also the danger of a wheelchair user falling out forwards when going downhill, or of a wheelchair tipping over backwards when going uphill. Control and braking are also difficult on steep gradients. Excessive cross-fall gradients present further difficulties when manoeuvring on ramps.

9.2.1 General

The relative levels of the accessible entrance to a building and the entry point to the site (as well as access routes across the site) should be designed to eliminate, as far as is practicable, the need for ramped access (see **8.1.4**). Where the change in level is such that a portion of the access route needs to have a gradient of 1:20 or steeper, the access should be ramped.

*NOTE 1 Where the change in level is less than 300 mm, a ramp is the only viable means of access, as it avoids the need for a single step (see **9.1.3**).*

Where a ramp is necessary (see **8.1.4**), its existence and location should be clearly indicated as a person approaches. If the beginning of the ramp cannot be located close to the accessible entrance, information should be provided at that point to direct users to the correct location. The text should be in large characters, contrasting visually with their background, and be accompanied by the International Symbol for Access.

NOTE 2 The International Symbol for Access is shown in BS 8300-2:2018, Figure 9.

A ramp should not intersect a flight of steps as this creates a tapered riser (see **9.1.2**).

9.2.2 Gradient of a ramp

A ramp should have the lowest practicable gradient within the range 1:20 to 1:12 and the maximum corresponding length between landings.

The gradient of a ramp flight in relation to its going should be not steeper than that shown in Table 3.

NOTE 1 Table 3 shows the maximum gradient and going acceptable for various rises of ramp, as follows.

- *The first column indicates the rise of the ramp to be achieved, in increments of 10 mm.*
- *The second two columns indicate the preferred gradient and the corresponding going. For example, a gradient shown as 20 is 1:20.*
- *The final two columns indicate the maximum permissible gradient and the corresponding maximum permissible going for the rise shown in column 1.*
- *For a given rise, any going intermediate between the figures shown in columns 3 and 5 is acceptable. The gradient 1/n can then be calculated as n = [going (in mm) / rise].*

NOTE 2 Different design solutions might be needed in transport infrastructure (see Inclusive mobility – A guide to best practice on access to pedestrian and transport infrastructure [15]).

No individual flight of a ramp should have a going greater than 10 m or a rise of more than 500 mm.

Table 3 — *Maximum permissible relationship between going, gradient and rise of ramps*

Rise of ramp, in increments of 10 mm	Preferred approach		Max. permissible approach	
	Preferred gradient of ramp, 1/*n*	**Going of ramp at preferred gradient**	**Max. permissible gradient of ramp, 1/*n* A)**	**Going of ramp at max. permissible gradient A)**
mm	*n*	m	*n*	m
150	20	3 000	12	2 000
160	20	3 200	12	2 000
170	20	3 400	12.47	2 119
180	20	3 600	12.54	2 257
190	20	3 800	12.63	2 399
200	20	4 000	12.73	2 545
210	20	4 200	12.83	2 695
220	20	4 400	12.95	2 850
230	20	4 600	13.08	3 009
240	20	4 800	13.22	3 174
250	20	5 000	13.38	3 344
260	20	5 200	13.53	3 519
270	20	5 400	13.70	3 700
280	20	5 600	13.88	3 887
290	20	5 800	14.07	4 080
300	20	6 000	14.27	4 280
310	20	6 200	14.47	4 486
320	20	6 400	14.69	4 700
330	20	6 600	14.91	4 920
340	20	6 800	15.14	5 148
350	20	7 000	15.38	5 384
360	20	7 200	15.63	5 627
370	20	7 400	15.89	5 879
380	20	7 600	16.15	6 139
390	20	7 800	16.43	6 408
400	20	8 000	16.71	6 685
410	20	8 200	17.00	6 972
420	20	8 400	17.30	7 268
430	20	8 600	17.61	7 573
440	20	8 800	17.93	7 888
450	20	9 000	18.25	8 214
460	20	9 200	18.59	8 549
470	20	9 400	18.93	8 896
480	20	9 600	19.28	9 253
490	20	9 800	19.63	9 621
500	20	10 000	20.00	10 000

A) The formula for deriving the maximum permissible going, G, and gradient, G_{rad}, from the rise, R, is:

$G = [(0.000\,04R^3) + (-0.0025R^2) + (11R) + (125)]$; and $G_{rad} = 1/n$ where $n = G/R$

Licensed copy: Aston University OpenAthens , Aston University, Version correct as of 25/03/2020

 © THE BRITISH STANDARDS INSTITUTION 2018 – ALL RIGHTS RESERVED

Licensed copy: Aston University OpenAthens , Aston University, Version correct as of 25/03/2020

If a series of ramp flights rises more than 2 m, an alternative means of step-free access should be provided. Where this is by means of a lifting appliance, it should meet the recommendations in **9.4**.

NOTE 3 The necessity for a lifting appliance needs to be determined on a case-by-case basis.

The cross-fall gradient of a ramp should be not more than 1:50.

9.2.3 Ramp widths

The surface width of a ramp, between walls, upstands or kerbs, should be not less than 1 500 mm (see **8.1.2**).

Where wider ramps are divided into separate channels, no channel should have a surface width less than 1 500 mm.

NOTE 1 It is not necessary to divide a wider ramp. A surface width of 1 800 mm is the minimum that permits two wheelchair users to pass each other.

NOTE 2 Sports facilities have their own requirements for ramp widths (see Accessible sports facilities [19]).

9.2.4 Landings

Landings should be provided at the foot and head of a ramp. They should be at least the width of the ramp and not less than 1 500 mm long, clear of any door swing or other obstruction.

Any intermediate landings along a series of flights in a straight line should be at least 1 500 mm long, clear of any door swing or other obstruction. If an intermediate landing is a quarter-turn or half-turn landing, the width of the ramp should be maintained throughout the turn or turns.

Intermediate landings at least 1 800 mm wide × 1 800 mm long should be provided as passing places where there is no clear line of sight from one end of the ramp to the other, or where there are three or more flights.

Unless it is under cover, a landing should have a slight cross-fall gradient, not exceeding 1:50, to help drain surface water.

9.2.5 Edge protection to ramps

A continuous upstand at least 100 mm high should be provided at any open edge of a ramp. The upstand should contrast visually with the surface of the ramp.

NOTE 1 A separate upstand is not necessary where solid guarding is provided, or where open guarding is provided that incorporates a continuous bottom rail 100 mm above the ramp surface.

NOTE 2 The upstand is intended to prevent a wheelchair user falling over the edge of the ramp and can assist with cane detection. A permanent design feature (e.g. a planting box) can give additional protection.

9.2.6 Surface materials

Surface materials should be chosen to be durable and easy to maintain, and should be slip-resistant when wet, to allow for rain and other environmental factors.

NOTE 1 Where weather or low temperature results in surfaces being covered in snow or ice, the slip resistance of a surface ceases to be effective. It is therefore important that external ramp surfaces are kept free of snow or ice as part of the management regime of the external space.

The surface of a ramp should contrast visually with the landings and the edge protection so that its presence is discernible by people who are blind or partially sighted.

To maintain traction, a sloping surface should have a higher slip resistance than an equivalent level surface. The steeper the slope, the greater the friction needed to maintain contact with the ground without slipping.

Licensed copy: Aston University OpenAthens , Aston University, Version correct as of 25/03/2020

Where different materials are used for the flights and landings of a ramp, care should be taken to ensure that their frictional characteristics are similar in order to minimize the risk of stumbling.

NOTE 2 Advice and further references on slip resistance of surfaces are given in Annex F.

Tactile paving should not be used at the top and bottom of ramps (see *Guidance on the use of tactile paving surfaces* [N1]).

9.2.7 Lighting

Lighting of ramps should be in accordance with Clause **11**.

9.3 Handrails

*COMMENTARY ON **9.3***

Wheelchair users do not normally need to use handrails to negotiate a ramp. However, in slippery conditions on long and/or steep ramps, handrails can help wheelchair users to steady themselves.

Some people with an ambulant mobility impairment might be weaker on one side and, therefore, a handrail on each side of the flight is essential for support, for ascending and descending.

Many people find it easier to negotiate a flight of steps than a ramp and, for them, the presence of handrails for support is essential.

The division of wide flights of ramps or steps into separate channels will allow an individual who might have less strength on one side or the other to be within easy reach of support. This is particularly important when many other people are using the ramps or steps at the same time.

9.3.1 Handrail and balustrade provision

A handrail should be provided on each side of a ramp or stair flight, throughout its length (including intermediate landings where this does not obstruct the use of adjoining access routes). The top surface of the handrail should be between 900 mm and 1 000 mm from the surface of a ramp or pitch line of a stair and between 900 mm and 1 100 mm from the landing.

NOTE 1 The height of 1 100 mm above landings allows for a situation where the handrail is the top rail of balustrading and forms part of guarding. Alternatively, the handrail may be separate from but supported by the guarding.

Balustrades should be designed in accordance with BS 6180:2011, Clause **5** and Clause **6**, and should be strong enough to withstand inadvertent impact from an electrically powered wheelchair or electric mobility scooter. Warning signs should be placed in suitable locations, restricting vehicle speed to 4 mph on all pedestrian walkways providing access to members of the public where guarding or balustrades are required.

NOTE 2 BS 6180:2011 gives calculation methods for pedestrian and vehicle impact on barriers. For impact by mobility scooters, professional advice is likely to be needed. DfT web guidance at https://www.gov.uk/mobility-scooters-and-powered-wheelchairs-rules/rules-for-class-3-invalid-carriages gives additional details of maximum permitted design parameters for mobility vehicles.

9.3.2 Handrail design

*COMMENTARY ON **9.3.2***

A non-circular handrail with a broad horizontal face is as easy to grip as a circular handrail and gives better hand and forearm support. The spacing of the handrail from the adjacent wall and the positioning of the handrail support are important in achieving the uninterrupted use of the handrail and avoiding shock through the hand hitting the support.

The horizontal extension of a handrail beyond the ramp flight or the first and last steps allows an individual to steady or to brace themselves before ascending or descending. For a person who is blind or

 © THE BRITISH STANDARDS INSTITUTION 2018 – ALL RIGHTS RESERVED

Licensed copy: Aston University OpenAthens , Aston University, Version correct as of 25/03/2020

partially sighted, the change in slope of the handrail and its return into a wall signals the start or finish of the flight.

A handrail should be:

a) easy and comfortable to grip with no sharp edges, but able to provide adequate resistance to hand slippage;

NOTE 1 An external perimeter of between 100 mm and 160 mm is the optimum size to provide a power grip around a handrail. Suitable profiles include circular or oval. A flatter profile gives better forearm support.

b) continuously graspable along its entire length without obstruction;

*NOTE 2 Well-spaced handrail supports are not considered an obstruction (see **9.3.3**).*

c) finished so as to provide visual contrast with the surroundings against which it is seen;

NOTE 3 Annex B gives guidance on how to achieve visual contrast. Less is known about how to achieve adequate visual contrast in external environments than in internal environments because of the much greater variability caused by changing weather and light conditions; however, the same principles apply.

d) terminated to include a minimum 300 mm long section in the horizontal plane beyond the start and finish of the ramp or the last nosing of a stair, at both top and bottom;

NOTE 4 Increasing the length of termination of the handrail at the top and bottom of a flight can be advantageous in certain situations, e.g. where large crowds are anticipated.

e) terminated in a way that reduces the risk of clothing being caught;

NOTE 5 It is preferable for this to be achieved by returning the handrail to the wall or floor. Where this is not possible, e.g. where the handrail extends beyond balustrading, the handrail may be terminated with a scroll or similar feature.

f) strong enough to support users and fixed to the structure in a way that supports the required loading.

9.3.3 Handrail dimensions and spacings

A handrail with an oval profile should have dimensions of 50 mm wide and 39 mm deep. The profile should have rounded edges with a radius of at least 15 mm.

Any circular handrail should have a diameter of between 32 mm and 50 mm.

There should be a clearance of between 50 mm and 75 mm between a handrail and any adjacent wall surface, and any handrail support should meet the handrail, centrally, on its underside. The clearance between the bottom of the rail and any cranked support, or continuous balustrade, should be at least 50 mm to minimize the risk of the handrail supports interrupting the smooth running of a person's hand along the rail.

NOTE Where a 50 mm diameter circular handrail is used, a 50 mm spacing from a wall allows the handrail to project not more than 100 mm into the width of the stair.

The inside edge of the handrail (the edge nearest to the walking line) should be not more than 50 mm outside the surface width of the stair.

9.3.4 Handrail and balustrade fixings

Handrail and balustrade fixings should be designed to meet the loading requirements specified in BS EN 1991-1-1. Care should be taken to ensure that the strength of fixings, attachments or anchorages that secure the handrail to the substrate are adequate for the required loading, taking into account the material of the substrate, the spacing between fixings and, where the substrate is concrete, the position of the reinforcement. If there is any uncertainty as to the strength of any

component in the fixing system, the design load should be increased by 50%. Reliance on the pull-out capacity of a single fixing should be avoided (see BS 6180:2011, **6.5**).

NOTE It is advisable to discuss suitable fixings with a specialist fixings supplier.

9.3.5 Handrail materials

In locations subject to extremely cold or hot temperatures, handrails should not become excessively cold or hot to touch, while being of a material that, if necessary, is sufficiently robust to resist vandalism or misuse.

NOTE Since handrails are used by some people when using a ramp or stair not only for support, but also to pull themselves up and to reduce the speed of descent when going down, reluctance to use the handrail (or involuntary letting go of the handrail) if it is uncomfortably cold or hot, presents a safety hazard. In extremes of cold, a person's skin can adhere to a very cold handrail, and the temperature can exacerbate certain medical conditions. Handrails whose surface is of a low thermal conductivity, such as timber or nylon-sleeved steel tube, are the most comfortable to touch in extremes of temperature. Handrails fabricated from metals with a relatively low thermal conductivity, such as stainless steel, are more suitable in locations where resistance to vandalism and/or low maintenance are key factors.

9.4 Lifting appliances, escalators and moving walks

*COMMENTARY ON **9.4***

Lifting appliances can provide an alternative to stepped access in the external environment. Lifting appliances appropriate for the external environment are conventional passenger lifts or slow speed lifts. However, wherever practicable conventional passenger lifts are to be preferred.

The equipment standards for lifting appliances assume that environmental conditions, such as temperature, humidity, exposure to sun or wind, snow or corrosive atmosphere, into which the equipment will be installed, are discussed as part of negotiation (i.e. discussion and agreement between the owner and equipment provider), to ensure safe and reliable operation.

Lifting appliances, escalators and moving walks should be in accordance with BS 8300-2.

*NOTE 1 Specific recommendations for lifting appliances are given in BS 8300-2:2018, **10.5**. Specific recommendations for escalators and moving walks are given in BS 8300-2:2018, **10.6**.*

When lifting appliances are to be installed externally, the nature of the external environment should be taken into account.

NOTE 2 Examples of relevant factors include the following.

- *The ambient temperature range (minimum and maximum temperatures) is relevant both for specification of the equipment and for the comfort and safety of users.*
- *If a lift well/liftway is external to a building where the ambient temperature is colder than the building internal spaces, this can lead to condensation within the lift well/liftway.*
- *If a lift well/liftway is external to a building where the ambient temperature is hotter than the building internal spaces, it could be subject to solar gain, which has implications both for ambient temperature limits and for ventilation for persons in the carrier.*
- *If extreme temperatures are to be expected, this has implications for persons in the carrier in the case of entrapment.*
- *The design of the building has implications for the means of protecting the lifting appliance, and for the level of water ingress protection provided for exposed equipment.*
- *High light levels externally might make indicators more difficult to read, and ambient noise might make audible signals more difficult to hear.*

Licensed copy: Aston University OpenAthens , Aston University, Version correct as of 25/03/2020

 © THE BRITISH STANDARDS INSTITUTION 2018 – ALL RIGHTS RESERVED

NOTE 3 Requirements for vandal-resistant lifts are specified in BS EN 81-71. The improvement of existing lifts for resistance against vandalism is covered in DD CEN/TS 81-83.

The non-slip properties of floors of lift cars, carriers of lifting platforms and steps of escalators and moving walks should be sufficient for the levels of moisture that are to be expected in an external environment.

NOTE 4 BS EN 115-1:2017, Annex J gives information on the determination of anti-slip properties of the tread surfaces of steps and pallets, of comb plates and floor plates of escalators and moving walks.

Adequate weather protection, including a roof, should be provided to external lift wells, covering the entrances, the lift controls and any external waiting space.

Drainage facilities should be provided to remove any water that might accumulate in the lift pit and elsewhere.

9.5 Subways and bridges

*COMMENTARY ON **9.5***

Subways and bridges provide vital links between different areas that might otherwise be divided by a river, railway, road or similar obstacle. They can represent the only means of crossing the obstacle without a lengthy detour.

Subways and bridges should be made inclusive to all potential users.

Stepped, sloped or ramped approaches to bridges and subways should be in accordance with **9.1** or **9.2** as appropriate.

Subways or bridges are likely to rise in excess of 2 m, which can make them inaccessible obstacles despite incorporating standard inclusive design features. For this reason, where practicable, conventional passenger lifts or an alternative route around the obstacle should be provided (see also **9.4**). Where this is not appropriate or possible then alternative provision should be made, including:

- shelter from inclement weather whilst using a bridge;
- level landings and rest areas, including seating; and
- help and call points that can connect to local management services, where applicable, in the event that assistance is required.

NOTE Security can be an added concern as bridges and subways can create remote hidden locations. Features that can improve security and create a feeling of safety include:

- *security cameras;*
- *avoidance of shadows and potential hidden locations;*
- *clear views from one side of the route to the other;*
- *materials and barriers that enhance rather than block sight lines;*
- *suitable lux levels to ensure good visibility appropriate to the area.*

Subways and access routes over footbridges should be illuminated in accordance with Clause **11** at all times of use.

Licensed copy: Aston University OpenAthens , Aston University, Version correct as of 25/03/2020

Licensed copy: Aston University OpenAthens , Aston University, Version correct as of 25/03/2020

10 Public facilities

10.1 Meeting and information points

*COMMENTARY ON **10.1***

A meeting point is an identifiable location where there is adequate space for people to congregate, rest and socialize without obstructing pedestrian or vehicular movement. Meeting points can be for different purposes, such as informal meeting, resting and socializing, providing information, or waiting for formal and informal assemblies (e.g. markets or festivals), and can include emergency assembly points in the event of evacuation of adjacent buildings. They differ in size and character, and have different features.

Information points are useful at places where people need to make a decision where to go or what to do next, e.g. at intersections of pedestrian access routes. They are particularly useful for people visiting an area for the first time or who are unfamiliar with it. Information points could include payment and ticketing facilities. They can be in the form of kiosks, wall boards, free-standing boards or plaques. They can be sheltered or exposed, depending on the location and type of information displayed.

10.1.1 General

Meeting and information points should be interspersed throughout the environment.

Informal meeting points should be located at places such as transport termini, the junctions of pedestrian routes, near landmarks and at the entrances to key buildings or amenities, both when arriving and leaving.

NOTE Larger assembly areas are often associated with a major landmark or building(s).

Information points should be provided at all public transport arrival points, entry points to a development or particular area, and key visitor attractions.

Free-standing information boards or plaques should not obstruct pedestrian routes, and should be positioned such that there is adequate space around them for people to stand and read the information without causing an obstruction.

Where seating is provided, it should meet the recommendations in **10.7**.

10.1.2 Signage

Meeting points with a particular function, such as markets, should be clearly signed from transport interchanges and arrival points. Information points should be clearly identifiable at locations such as transport facilities, key buildings and visitor attractions.

Meeting points, information points and their facilities should be clearly indicated on any map or other graphic representation of the area. Signage should be part of an integrated way-finding strategy and should meet the recommendations in **8.3**.

Information points, boards and plaques should contrast visually with the background against which they are seen.

10.1.3 Parking

Where there is a space used for public assemblies there should be accessible parking within 50 m; this may be provided on a restricted use basis or on-street as designated accessible parking spaces. This parking should be clearly signed with information on when use of the space is allowed.

Designated accessible parking spaces should meet the recommendations given in **7.4**.

10.1.4 Lighting

Lighting of meeting and information points should be in accordance with Clause **11**.

 © THE BRITISH STANDARDS INSTITUTION 2018 – ALL RIGHTS RESERVED

Licensed copy: Aston University OpenAthens , Aston University, Version correct as of 25/03/2020

10.1.5 Telephones

Public telecommunication equipment located at meeting and information points should meet the recommendations in **10.6**.

10.1.6 Information and payment counters

Fixed information and payment counters should be in accordance with BS 8300-2.

*NOTE 1 Specific recommendations for fixed information and payment counters are given in BS 8300-2:2018, Clause **16**.*

Where necessary, weather protection should be provided.

NOTE 2 The dispensing of tickets and paper monies might specifically need protection against the wind.

10.1.7 Assistive listening

Assistive listening systems such as induction loops should be provided at open air stadia, recreation grounds, music festivals and amphitheatres, and at any information counter/points where audible information is given (staffed or non-staffed). Assistive listening systems should be in accordance with BS 8300-2.

The parts of an external environment where people can use the benefits of assistive listening systems should always be clearly signed and identified with the relevant symbols.

*NOTE Specific recommendations for audible communication systems are given in BS 8300-2:2018, Clause **13**. Standard public information symbols are shown in BS 8300-2:2018, Figure 9.*

10.2 Permanent visitor attractions

*COMMENTARY ON **10.2***

Visitor attractions are buildings, spaces or particular features such as monuments, fountains, nature trails or scenic walks, that give an area special character and that visitors wish to see or visit.

The features of a visitor attraction vary greatly in character and size but the need to meet a range of user requirements remains consistent.

All permanent visitor attractions should be consistently and clearly signed as part of the way-finding strategy.

NOTE It can be useful if a logical trail is made around the attractions, using signage, maps, information leaflets or audio guides.

There can be significant changes in the volume of people at a particular location depending upon whether there are peak and off-peak times, the primary routes and travel choices of visitors, and the locations of meeting points. These characteristics should be taken into account and appropriate measures put in place, which might include enlarged circulation areas, sight lines, lighting, planting, and other permanent and temporary features.

Parking for permanent visitor attractions should meet the general recommendations for parking given in Clause **7**.

10.3 Temporary external events

*COMMENTARY ON **10.3***

Temporary external events can range in scale from community parks, square and town centre events, through to large-scale events in parks, farms or country estates, urban/suburban spaces and major city squares (whether admission is free or chargeable, ticketed or unticketed). These events vary greatly in character and size but the need to meet a range of user requirements remains consistent.

Public spaces, which could include the high street, pedestrian shopping areas, parks, plazas, town squares, etc., can be used for many things other than the primary intended use. For example, a pedestrianized shopping street during the week might offer no other function than to provide an access route or thoroughfare to the shops, but on weekends might hold a market with stalls; or a plaza might be used as a venue for music festivals which take place during the day and into the night during the summer months, with a Christmas market in December, and used by office workers during mid-week. Issues to be assessed include parking provision for stallholders at markets; the need to keep dropped kerbs and access routes free of obstructions; the need to replicate signage that might become hidden; the adequacy of lighting for night-time events; and the accessibility of temporary new routes.

Further information on the management and infrastructure of temporary external events is given in Annex D.

When public space is being developed, the possible alternative uses of the space should be taken into account. The infrastructure should allow for flexibility in order to reduce the adverse impact of temporary structures and services provision, e.g. by reducing the need for exposed cabling.

When existing accessible through-routes are compromised, an alternative accessible route should be provided and adequately signed.

Where it is not possible to avoid obstructing existing features designed to improve accessibility, alternative equivalent provision should be made.

10.4 Public art

All users should benefit from and be able to access public art, and such art should therefore be as accessible as possible for as many members of the public as possible, including disabled people. Account should be taken of the way in which all people can access and enjoy and interact with the art.

Items of public art should not obstruct clear pedestrian routes, nor reduce the access route width below that recommended in **8.1.2**. Where items of public art are provided in pedestrian areas, warning of their presence should be provided which is suitable for a range of users including people who are blind or partially sighted.

Hazard protection should be provided in accordance with **8.2**.

10.5 Refreshment areas

*COMMENTARY ON **10.5***

Outdoor café areas are often subject to a "pavement café licence" agreement.

Outdoor refreshment areas should not reduce the access route width below that recommended in **8.1.2**. The pedestrian route which is maintained should be located in a logical and navigable position to allow ease of movement past the outdoor refreshment area.

Outdoor refreshment areas should be contained by barriers to all sides, to ensure that moveable furniture does not spread across clear pedestrian routes causing an obstruction. The feet or base of temporary or permanent barriers should not project into the minimum clear width of any access route. Barriers should incorporate a solid detectable rail or edge not higher than 150 mm above ground level to allow detection for people who are blind or partially sighted using a white cane.

The gap in the barriers which people use to access the refreshment area should be at least 1 000 mm wide. Barriers should contrast visually with the background against which they are seen.

Fixed seating and tables within a refreshment area should be spaced to accommodate a variety of users, including wheelchair users, electric mobility scooter users and people with assistance dogs.

 © THE BRITISH STANDARDS INSTITUTION 2018 – ALL RIGHTS RESERVED

Licensed copy: Aston University OpenAthens , Aston University, Version correct as of 25/03/2020

Licensed copy: Aston University OpenAthens , Aston University, Version correct as of 25/03/2020

They should also provide choice in terms of seating, with at least some seats incorporating backrests and arm rests.

NOTE 1 Some people might need to use a table for support to enable them to stand upright. Tables that are sufficiently stable are preferable.

A range of table heights should be available, with the clear space to the underside of the tables between 700 mm and 800 mm.

NOTE 2 Some people prefer to remain standing, so some higher counters might be advisable.

10.6 Public telecommunications

*COMMENTARY ON **10.6***

Despite the prevalence of personal mobile phones, public payphones are useful at transport termini, shopping centres, pick-up points, and meeting or information points. New types of interactive information technology might enhance the usefulness of information points.

Public telecommunication equipment, i.e. public telephones/internet booths, should be suitable for a variety of users.

Telecommunication equipment units should be located outside the access route (see **8.1.2**), so that neither they nor their users cause an obstruction or hazard.

Accessible features should be provided, including inductive couplers and volume control, and the presence of these features should be clearly indicated.

*NOTE 1 Recommendations for inductive couplers are given in BS 8300-2:2018, **13.6**.*

Where necessary, weather protection should be provided. The shelter should be sufficiently large to accommodate a wheelchair user.

Where items of public telecommunications equipment project into an access route, hazard protection should be provided in accordance with **8.2**.

*NOTE 2 Details of suitable heights of public telephones and internet booths can be found in BS 8300-2:2018, **15.6**. Guidance on reach ranges is given in BS 8300-2:2018, Annex E.*

10.7 Seating

*COMMENTARY ON **10.7***

Seating can be essential for people in terms of providing somewhere to stop and rest, but can also be a valuable tool in creating a place or space which is welcoming and inviting in which people will choose to spend time.

Seating should be located such that it and its users do not reduce the access route width below that recommended in **8.1.2** when in use by a variety of people, including people with luggage or shopping, people with pushchairs, and people using mobility aids or assistance dogs.

In commonly used pedestrian areas, transport interchanges and stations, seats should be provided at intervals of not more than 50 m.

A choice of seating options should be provided suitable for a variety of users. Appropriate accessible space should be allowed for wheelchair users to be integrated within the general seating provision.

Seating should contrast with the background against which it is seen. It should not have a highly reflective finish.

Where a significant number of benches/seating are provided in one location, 50% of the seating should provide the following features. Where one seat or bench is provided in isolation to other

Licensed copy: Aston University OpenAthens , Aston University, Version correct as of 25/03/2020

seating, or in a location with existing less accessible seating, it should always incorporate the following features.

a) Where more than one seat is to be installed in a pedestrian area, a variety of seat heights should be provided, with at least one each with a seat height of 380 mm, 480 mm and 580 mm from ground level. Where only one seat is installed, the seat height should be between 450 mm and 480 mm, and the seat should have both back support and arm rests.

NOTE A seat height of 380 mm is suitable for people of short stature; 480 mm allows for lateral transfer onto the seat by wheelchair users; and 580 mm is suitable for people who require a higher seat.

b) For some seats, back support and arm rests should be provided as some people requiring support need both.

c) To enable a wheelchair user to transfer laterally onto a bench seat, a level transfer space 1 200 mm wide should be located at one end, with an arm rest set in 500 mm to 750 mm from the transfer space. Where there is more than one bench seat, a choice of left and right transfer should be provided.

d) Arm rests should be provided to help people lower themselves onto the seat and stand up. These should be provided at a height of 200 mm from the surface of the seat, and should extend from the back support forwards to cover at least 80% of the depth of the seat. Arm rests should contrast visually with the remainder of the seat to ensure that they are easily identifiable. There should be a space between arm rests of at least 500 mm.

e) Back support should be provided at a height of at least 300 mm from seat level.

Where amphitheatre-style seating is provided, measures should be taken to warn people of the existence of the feature and to protect them against falling.

10.8 Water features

*COMMENTARY ON **10.8***

Water features in the external environment can play an important role in creating a focal point in a space or place. Careful assessment of the requirements of a range of users is, however, essential when designing external water features.

Water features should not be located within a clear pedestrian route or along a desire line. They should be positioned such that if blown by the wind (e.g. fountains), they do not affect people using pedestrian routes.

If a water feature is designed to be used or interacted with, all people, no matter what their age or ability, should have the opportunity to do this if they choose.

The extent of a water feature should be highlighted by the use of colour contrast, textural variation and sound so that it is clearly identifiable.

NOTE Hidden or concealed water features (e.g. rills) can be particularly problematic for people who are blind or partially sighted.

10.9 Trees, planting and soft landscaping

*COMMENTARY ON **10.9***

*Trees, planting and soft landscaping are important elements in urban areas for aesthetic, environmental and functional reasons. They can also provide landmarks and features to assist with way-finding for some users, including people who are blind or partially sighted. Sensory planting can help way-finding (see **12.3**). Guidance on maintenance is given in Annex A.*

 © THE BRITISH STANDARDS INSTITUTION 2018 – ALL RIGHTS RESERVED

Licensed copy: Aston University OpenAthens , Aston University, Version correct as of 25/03/2020

Trees, planting and soft landscaping features should not be located within a clear pedestrian route or desire line. Roots and branches should also not provide an obstruction.

Surface- or ground-mounted tree pits should provide a smooth transition and accessible surface from the surrounding ground level/finish.

Joints in such surface features should meet the recommendations in **8.4.1**.

Raised planters should not be located within a clear pedestrian route or along a desire line, although they can be useful in delineating spaces/pedestrian routes.

Raised planters should contrast visually with the surrounding surface finishes to ensure that they are recognizable. They should not taper downwards, so that the ground level detectable outline is an accurate reflection of the extent of the planter throughout its height.

Raised planters should be at least 150 mm high from ground level.

Care should be taken to ensure that trees and large shrubs do not affect the functionality of lighting.

10.10 Sanitary accommodation

Public toilets should be provided at locations where people meet, wait or spend time, such as arrival points, car parks, public transport interchanges, retail areas and cafés.

NOTE 1 Recommendations for public toilets are given in BS 6465.

NOTE 2 Ideally, public toilets are open during the hours of operation of the facilities that they serve.

A variety of facilities should be provided to ensure that toilets are available for the anticipated range of users (e.g. accessible toilets, Changing Places toilets, family toilets). These should be in accordance with BS 8300-2.

*NOTE 3 Specific recommendations for sanitary accommodation are given in BS 8300-2:2018, Clause **18**.*

10.11 Assistance dog toilets/spending areas

Assistance dog toilets or spending areas should be provided in certain locations to allow people who use assistance dogs to toilet their dogs in a safe and clean manner.

NOTE Further guidance on where to provide these facilities and how to design them can be found in the Guide Dogs for the Blind Association publication Guidance on the provision of spending facilities for guide dogs and other assistance dogs [25].

11 Lighting

*COMMENTARY ON CLAUSE **11***

The lighting of the external environment needs to take account of the wide range of illuminance that can occur during the day and the night. It is therefore, in many cases, very different from that recommended for internal environments. Also, where it is necessary to light external environments used to access and egress buildings, the difference in illuminance experienced by the user has to be taken into account. This is because users take time to adapt to differences in illuminances, with a longer time being taken to adapt to a darker environment. Therefore, to allow for night-time adaptation with a user moving from inside to outside a building, there has to be a gradual reduction of illuminance from the internal to the wider external environment. To allow for daytime adaptation, the opposite is the case.

The surfaces of the various elements of street furniture can be highly reflective. Whilst this can provide areas of high luminance and sparkle, it can be confusing for people who are blind or partially sighted and people who have sensory/neurological processing difficulties.

Good external environment lighting is crucial in ensuring social amenity and enabling people who are partially sighted, and people who have sensory/neurological processing difficulties, to be able to use the external environment conveniently, safely and securely. It can also be used as a means to guide people and help them to understand where they are. The illuminance on exterior surfaces, the quality of the lighting and the avoidance of glare are key factors to be considered. In addition there is also a need to preserve the darkness of the external environment and thereby reduce light pollution. The general location is an important factor in external lighting and this is defined by five environmental zones as shown in Table 4. The lighting of roads, highways and residential areas is covered in BS EN 13201-2.

Table 4 — *Environmental zones*

Zone	Surroundings	Lighting environment	Examples
E0	Protected	Dark	IDA Dark Sky Parks, UNESCO Starlight Reserves
E1	Natural	Intrinsically dark	Areas of Outstanding Natural Beauty, relatively uninhabited rural areas
E2	Rural	Low district brightness	Village or relatively dark outer suburban locations
E3	Suburban	Medium district brightness	Small town centres or suburban locations
E4	Urban	High district brightness	Town and city centres, commercial areas

Source: CIE 150:2003 [26].

NOTE The lighting provision in these five environmental zones is aimed at providing a safe driving and pedestrian environment.

11.1 General principles of lighting

*COMMENTARY ON **11.1***

The flow of light affects the view of objects in the external environment and also the appearance of features and the human face. People who are Deaf and hard of hearing need to see and understand the movement of lips for lip reading, and of hands when signing.

Natural lighting or daylighting is provided to the exterior environment. It is not possible for this to be designed to maintain a level of illuminance.

Artificial lighting systems should be designed to maintain a level of illumination that is comfortable and provides a safe environment which is suitable for people who are blind or partially sighted. The artificial lighting should avoid any perception of flicker and not give rise to light pollution.

NOTE 1 Further guidance on artificial lighting systems is given in the Secured by Design publications New homes [27] and Commercial developments [28], and in CIE 196 [29].

NOTE 2 CIBSE publication LG06/16 [30] gives general guidance for a wide range of exteriors.

Daylighting design should avoid excessive illuminance and glare from daylight or sunlight on critical surfaces and elements. This should be achieved through avoidance of highly reflective surfaces, changes in their orientation and direction, and the use of shading devices.

NOTE 3 Natural lighting or daylight has many useful properties including daily and seasonal changes; good colour rendering and daylight is also linked to health benefits. Recommendations on daylight design can be found in BS 8206-2. The effects of daylight on health are described in BRE Client Report B137170-01 [31].

Where a lighting design has been determined for a specific feature, it should be used consistently wherever that feature appears.

The lighting of specific applications should be as shown in Table 5.

 © THE BRITISH STANDARDS INSTITUTION 2018 – ALL RIGHTS RESERVED

Licensed copy: Aston University OpenAthens , Aston University, Version correct as of 25/03/2020

Licensed copy: Aston University OpenAthens , Aston University, Version correct as of 25/03/2020

Table 5 — *The artificial lighting of specific applications*

All values in average maintained illuminance (lux)

Application	Average illuminance	Minimum illuminance
Statues	>50	—
Flags	50	—
Pedestrian routes in the external environment	5	—
Pedestrian routes adjacent to the entrances/ exits of buildings	—	100
Cycleways	10	—
Subways (open) (night)	50	25
Subways (enclosed) (night)	100	50
Subways (enclosed) (day)	350	150
Footbridges (open) (night)	30	15
Footbridges (enclosed) (night)	100	50
Footbridges (enclosed) (day)	350	150
Stairways and ramps (open) in the external environment.	30	15
Stairways and ramps (open) adjacent to the entrances/exits of buildings	—	100
Outdoor car parks:	—	—
Light traffic	5	—
Medium traffic	10	—
Heavy traffic	20	—
Public transport	—	—
Bus stops	20	—
Tram platforms	20	—
Reading signs	50	—
Conflict areas	—	5 to 15
Pedestrian crossings	—	10 to 15

NOTE 1 Values in this table are drawn from CIBSE publication LG06/16 [30] and the SLL code for lighting *[32].*

NOTE 2 The values given for reading signs would be adequate for the illumination of entry barrier controls and car park ticket machines.

11.2 Avoiding glare and shadows

Some people who are blind or partially sighted, or who have sensory/neurological processing difficulties, are particularly distracted by glare from bright patches of light within their field of view and find an even illuminance to be less confusing. Uplighters located at low levels on access routes can also cause glare problems for some people. In the artificial lighting of the exterior environment this can be mitigated by ensuring that light is directed at surfaces or objects to provide an even or gradual change to illuminance.

The positioning of artificial light sources should be designed to avoid creating glare, pools of bright light and strong shadows.

Licensed copy: Aston University OpenAthens , Aston University, Version correct as of 25/03/2020

11.3 Colour rendering

*COMMENTARY ON **11.3***

The effectiveness of light reflectance value differentials, when daylit in the external environment, is reduced when surfaces are lit at night by artificial light sources. The colour rendering of surfaces can be enhanced by the correct choice of lamp as indicated in the SLL code for lighting *[32].*

Artificial lighting in the external environment should give good colour rendering of all surfaces.

NOTE Around 1 in 12 men and 1 in 200 women in the world are colour-blind. Guidance is available from http://www.nhs.uk/conditions/colour-vision-deficiency/Pages/Introduction.aspx.

11.4 Illumination for lip reading

Where one-to-one communication is important, e.g. at information points, lighting should illuminate the face of the person speaking to make it easier for a person to lip read.

11.5 Ramps

Care should be exercised in the location and orientation of a ramp to avoid, where possible, glare and cross-shadows which can prevent people who are blind or partially sighted distinguishing changes in gradient.

Artificial lighting to a ramp should be evenly distributed, with an illuminance at ramp and landing level as shown in Table 5.

11.6 Steps and stairs

Each flight and landing of a stepped access route should be well illuminated to provide a clear distinction between each step and riser and avoid the generation of highly contrasting shadows. The illuminance at tread level should be as shown in Table 5.

NOTE 1 Light-emitting nosings, strings or handrails can be beneficial as a way-finding aid.

NOTE 2 A proprietary nosing can provide a durable solution that satisfies both visual contrast and slip resistance criteria (see BRE IP 15/03 [24]).

Lighting that causes glare (such as poorly located wall lights, spotlights, floodlights or low-level light sources) should be avoided.

11.7 Meeting and information points

Meeting points should be lit to ensure physical and perceived safety, facilitate surveillance, and discourage antisocial behaviour.

Fixed information and payment counters should have illumination in accordance with BS 8300-2.

*NOTE Specific recommendations for fixed information and payment counters are given in BS 8300-2:2018, Clause **16**.*

Information boards and plaques should be adequately lit so that they are easily readable. The lighting should be positioned to avoid bright patches of reflected light and glare in the direction of the reader. Boards and plaques should be positioned such that people around them do not cause shadows across them.

11.8 Way-finding

The lighting design strategy should serve both way-finding and safety, the latter usually through illuminated signage.

NOTE Lighting can be vital for way-finding at night. This can be achieved by directional lighting and the colour coding of external areas and key pedestrian routes.

 © THE BRITISH STANDARDS INSTITUTION 2018 – ALL RIGHTS RESERVED

Lights and signs should be positioned to avoid bright patches of reflected light and glare in the direction of the reader.

Artificial light should be designed to give good colour rendering of signs.

12 Specific locations

*COMMENTARY ON CLAUSE **12***

There are many initiatives that can support inclusion within nature trails and some parks and gardens. For example, many wheelchair users have cross-country wheelchairs or electric mobility scooters suitable for more challenging terrain. It is recognized that it is not always practicable to provide the recommended gradients and surfaces, but it is nonetheless important to ensure that the surfaces are smooth and firm and that all access points such as gates are accessible to these larger mobility-assisting vehicles.

*NOTE 1 Some individual features in the locations discussed in this clause require tactile paving. Recommendations for tactile paving are given in **8.4.2**.*

*NOTE 2 Many individual features in the locations discussed in this clause require lighting. Recommendations for lighting are given in Clause **11**.*

NOTE 3 Guidance on management and visitor information is given in Annex A.

12.1 Nature trails

Nature trails should be designed to be as usable as possible for as many people as possible, taking into account the requirements of a variety of users.

Information should be provided at the beginning of a nature trail to indicate the accessibility of the trail, including the availability of facilities such as seating, or barriers such as steps where these are unavoidable.

Drainage to a route or area should be carefully planned to avoid unnecessary waterlogging of pathways.

Toilets should be provided at the start of a trail within the car park (see **10.10**).

All accessible paths to nature trails should be designed in accordance with **8.1** and **8.4**.

Where ramps are required, they should be designed in accordance with **9.2**.

Access to routes should provide for access via electric mobility scooters or cross-country wheelchairs, including gates in accordance with **8.5.1**.

Signage should be designed in accordance with **8.3**. Tactile signs and symbols should be used throughout.

Where raised decked pathways are provided they should have handrails in accordance with **9.3**.

Where pedestrian routes cross cattle grids, there should be an accessible track across the cattle grid (see **8.5.2**).

Bird-watching or nature hides should be accessible, and facilities and viewing windows should be provided at a variety of heights for both seated and standing users.

NOTE For further information on the design of rural paths, see the Fieldfare Trust publications Least restrictive access guidelines [33] and Countryside path network guidelines [34], and BS 5709.

12.2 Beaches and piers

Beaches and piers should be accessible and usable for as many people as possible, taking into account the geography and topography of an area.

Licensed copy: Aston University OpenAthens , Aston University, Version correct as of 25/03/2020

Licensed copy: Aston University OpenAthens , Aston University, Version correct as of 25/03/2020

Beach areas, although a natural feature, should incorporate features to enable access onto them, where possible. Where this involves providing ramps, they should be designed in accordance with **9.2**. Stepped access down to beach areas should be designed in accordance with **9.1**.

NOTE 1 There are a number of temporary solutions that can be used during the summer season, including roll-out routes and beach wheelchairs which can be made available for hire.

Suitable temporary seating for disabled and older users should be provided where possible, in addition to standard deck chairs.

Public toilets to beach areas should be located to allow use from beach areas, as well as from nearby car/cycle parking. A variety of facilities should be provided to ensure that toilets are available for the anticipated range of users (e.g. accessible toilets, Changing Places toilets, family toilets). These should be in accordance with BS 8300-2.

Any showers associated with beaches should be level, with a suitable access route, and should meet the recommendations in BS 8300-2.

*NOTE 2 Specific recommendations for sanitary accommodation are given in BS 8300-2:2018, Clause **18**.*

Where beach huts are provided for public hire, at least one of them or 5%, whichever is the greatest, should be accessible to wheelchair users and from pedestrian routes.

Access into and within buildings on piers should be in accordance with BS 8300-2.

12.3 Parks and gardens

*COMMENTARY ON **12.3***

Parks and gardens can be both formal and informal, and vary in size from the small local parks on housing estates, large municipal parks with facilities such as cafes, tennis courts, paddling pools, orangeries, etc., through to country parks and large historic gardens covering many acres. It is important to review all functions to ensure that accessibility is maximized.

There are a number of key features that can improve the enjoyment of the park or garden, including appropriately located car/cycle parking, access to toilets, barrier-free level routes, seating and resting points, suitable viewing platforms and clear tactile maps.

There is a clear difference in providing a route to access from A to B and the route within a garden design. The nature of the park or garden is likely to dictate the type of route, but features such as circular routes and short cuts can improve accessibility. Where the topography of land restricts access, viewing platforms or other methods can be provided to inform individuals.

A sensory garden concentrates a wide range of sensory experiences. If designed well it provides a valuable resource for a wide range of uses, from education to recreation. A sensory trail can provide a range of experiences provided along a route, with more association with movement. It can provide orientation and interest between different spaces (e.g. from indoors to an outdoor space), picking up themes that help connect them. The Sensory Trust publications and website (http://www.sensorytrust.org.uk/) provide more information.

Guidance on sports facilities within parks is available from Sport England (www.sportengland.org).

Any street furniture in parks and gardens should be in accordance with **8.2.1**. Trees, planting and soft landscaping should meet the recommendations in **10.9**.

Any sculptures or other structures within the hard landscaping should meet the recommendations in **10.4**.

 © THE BRITISH STANDARDS INSTITUTION 2018 – ALL RIGHTS RESERVED

Licensed copy: Aston University OpenAthens , Aston University, Version correct as of 25/03/2020

12.4 Fishing and angling

Fishing and angling locations should be as accessible as possible, whether sea, pier, canal or river fishing.

NOTE Further information is available from the British Disabled Anglers Association at https://bdaa.co.uk.

12.5 Historic landscapes and monuments

*COMMENTARY ON **12.5***

Historic buildings, landscapes and monuments exist for the enjoyment and appreciation of everybody. Good quality access can enhance understanding of the historic environment and ensure its sustainability into the future. With the right kind of thought and discussion, barriers to access and inclusion can be removed.

The Historic England guide Easy access to historic landscapes *[35] provides advice on all aspects of making historic landscapes accessible, including establishing an access strategy, overcoming barriers, and making access a reality through practical examples and case studies.*

Before any work is undertaken to improve access to a historic landscape or monument, an inclusive design strategy should be produced, in addition to and in conjunction with the conservation assessment/statement.

The inclusive design strategy should highlight that the requirements of visitors and users are clearly understood, as well as the significance of the setting. Proposals should:

a) demonstrate an understanding of the existing context, which includes the historic environment or features of local distinctiveness or importance;

b) demonstrate an understanding of the values which are attached to the existing environment that need to be considered;

NOTE 1 This could include values such as visual appearance, communal understanding and association, and historical context. From a heritage perspective this includes the significance of heritage assets: why they are important in terms of archaeological, architectural, artistic or historic interest.

c) identify the challenges that need to be addressed, e.g. a balanced approach between conserving the historic environment and improving access; and

d) identify the optimum (design and inclusive design) solution which addresses the issues identified within the context being delivered.

*NOTE 2 Further guidance on inclusive design strategies is given in Clause **4**.*

Specialist advice from heritage/conservation officers/consultants, and access officers/consultants, should be sought when dealing with historic or listed environments.

When considering reuse or refurbishment of heritage assets, historic or listed environments, opportunities should be explored to identify potential modifications to improve levels of inclusion and access.

12.6 Play areas

Play areas should be designed to be inclusive and accessible, providing opportunities for people with a variety of impairments. Play areas should avoid segregation and separation, and should provide:

- clear routes through the play area, designed in accordance with **8.1** and **8.4**;
- an interesting landscape with a variety of accessible ground levels;
- sensory play opportunities, including visual, audible and tactile;
- dynamic pieces within easy reach for a range of users (seated, standing and different heights);

- accessibility to water and sand opportunities where these are provided;
- the ability to get close to and interact with climbing units which might not themselves be accessible;
- challenge for those using the facility;
- quiet areas that incorporate gentle sensory experiences;
- quiet areas to allow those who require them to retreat to;
- accessible observation points, where parents or carers can observe their children without being involved in play activities;
- easy access to toilets (see **10.10**).

Licensed copy: Aston University OpenAthens , Aston University, Version correct as of 25/03/2020

 © THE BRITISH STANDARDS INSTITUTION 2018 – ALL RIGHTS RESERVED

Annex A (informative) Management and maintenance

NOTE Planned management and maintenance activities provide an opportunity to upgrade features and facilities to meet the most recent standards.

A.1 Management

A.1.1 Visitor information

Any website providing information for visitors needs to include details of the accessibility of the venue or attraction, and the facilities available, in order to enable people to plan their visit around their access requirements.

A.1.2 Roads and pedestrian routes

All vehicular and pedestrian routes need to be kept clear of obstructions. Where there is moveable seating, or other street furniture (e.g. advertising "A" boards), checks are needed to ensure that it has not been moved to where it could cause an obstruction. Any rubbish that accumulates around waste bins needs to be removed as soon as possible, taking into account bin collection dates.

Wheelchair spaces adjacent to seating need to be kept clear.

A.1.3 Temporary works

Where any temporary barriers are erected for maintenance or replacement works, the obstruction of pedestrian routes needs to be kept to a minimum. Where works are necessary, and the route becomes narrower than 1 000 mm at any point, an alternative route might be needed. Any barriers or guarding need to be at least 900 mm high and visually contrasting with the background against which they will be seen.

Where barriers or guarding are not required, it needs to be determined whether the route is detectable for cane users.

If any works mean that pedestrians will have to use the carriageway, kerb ramps or raised access routes are required. If a dropped kerb is temporarily unavailable, a temporary ramp with an associated tactile surface is needed to enable access.

Further guidance is available in DfT publication *Safety at street works and road works: a code of practice* [36].

A.1.4 Signage

All signage and information such as maps, literature, timetables and audio guides need to be accurate and kept up-to-date. Guidance on accessible signage and viewing distances can be found in the *Sign design guide* [22] and BS 8300-2.

Temporary signs and information are particularly important where routes change or have to be temporarily diverted, and where facilities such as lifting appliances and public toilets are temporarily out of service. In these cases signs need to be located at points where people can choose an alternative so that they do not have a wasted journey. Signs and notices need to be placed such that they do not obstruct the access route; it is relatively common to find these blown over or moved. Some disabled people need to conserve their energy and not waste it walking around areas trying to find their destination. Others can experience fatigue, breathlessness or pain and discomfort.

Licensed copy: Aston University OpenAthens , Aston University, Version correct as of 25/03/2020

Licensed copy: Aston University OpenAthens , Aston University, Version correct as of 25/03/2020

It is also important that temporary signs are removed when no longer required, and that original or new signage is put back in place. Where bespoke wording is required on temporary signs, laminated sheets are often used. These need to incorporate sans serif typefaces of sufficient size for the viewing distance, mixed case (initial capital letter then lower case) lettering that offers a minimum 65 to 70 points contrast in LRV, and a matt surface finish (matt laminate sheets are available to avoid reflection).

Signs are ideally provided at each decision point. However, on large areas of pedestrian space, such as parks, this can be a challenge as the routes taken to any given point are less regulated.

Whenever possible, it is useful to inform local organizations of disabled people so that they can plan alternative routes in advance to avoid areas where work is taking place.

A.1.5 Accessible parking

Off-street parking spaces and parking spaces in basements need to be marked and maintained by the management body responsible. Designated accessible parking spaces need to be managed to ensure that they are available for disabled people and are not used by non-disabled motorists. Land owners need to introduce their own measures to give people who hold a Blue Badge priority of use and to deter parking abuse of designated accessible parking spaces. Where possible, it is desirable for disabled employees to be allocated designated and marked spaces specifically for their own use.

Where there is a management body, it also needs to take responsibility for enforcing and monitoring supply and demand. In particular, it is important that any management plan addresses how to meet future demand from people who hold a Blue Badge, and indicates how the design is to accommodate such a demand, e.g. if new Blue Badge holders move into an area or if it becomes clear that more visitor parking is needed for Blue Badge holders.

The overall number of designated accessible parking spaces needs to take account of existing planning guidance. Sometimes special events lead to a need for more accessible spaces. These can be managed by staffing the car park area and coning off extra spaces as close to the building as possible and supervising how these are allocated according to need (see Annex D).

A.1.6 Mechanical and electrical equipment

Where any mechanical or electrical equipment required for access (e.g. barriers, lifting appliances, escalators, moving walks, lighting) is not operational, clear signage and information on alternative routes are needed, including information on when the equipment is expected to be put back into service.

It can be useful to provide a telephone number or other means of reporting faulty equipment.

A.1.7 Public facilities

Management control of specific facilities offering services, such as cafes, is intended to ensure that furniture and any other associated features do not become obstacles for people who are blind or partially sighted.

“A” board signs are a particular problem, as being movable low-level signs they can be hazardous obstacles for people who are blind or partially sighted and restrict the width of routes for wheelchair users and parents with prams, etc. Many could be replaced by signs on buildings. Where they are used they need to be restricted to the street furniture zone, highlighted by visual and ground surface contrast, and robustly positioned in place so they do not fall or get knocked over.

Where possible, there need to be suitable arrangements for assistance dogs at visitor attractions and recreation and play facilities, including designated spend areas. Guidance on this is available from Guide Dogs for the Blind Association (http://www.guidedogs.org.uk).

 © THE BRITISH STANDARDS INSTITUTION 2018 – ALL RIGHTS RESERVED

Licensed copy: Aston University OpenAthens , Aston University, Version correct as of 25/03/2020

A.1.8 Keys to accessible toilets and Changing Places toilets

Keys (RADAR and other) for accessible toilets and Changing Places toilets need to be readily available from a location in close proximity to the facility and well signed.

A.1.9 Street furniture

The provision of street furniture and signage needs to be carefully managed and coordinated so that it does not accumulate and become a clutter, which can be confusing and unattractive. A clear policy on maintaining route widths, avoiding encroachment on pedestrian desire lines, and the style and positioning of furniture is helpful. Where the placement of tables and chairs is licensed, all aspects of accessibility need to be considered including spacing, position, style and contrast of individual tables and chairs. Where controlling the items becomes an issue, screens or planters can be used to mark out an area to ensure that chairs are never placed beyond the designated zone.

A.1.10 Emergency communication

Where automatic access controls, lifting appliances, escalators or moving walks are installed or there are accessible toilets or Changing Places toilets, a member of staff needs to be available at all times to take emergency calls and give instructions on alternative arrangements or emergency procedures. In some instances, the member of staff might be located off site, so these facilities need to be checked very regularly to ensure that the emergency communications and pull cords are working. It is also helpful to provide a contact telephone number on the doors of facilities where there is no supervision, so that help can be obtained without using the emergency measures.

A.1.11 User feedback

A survey of users, particularly disabled people, and user groups can give useful feedback on the effectiveness of the environment and the facilities provided, and can inform future changes and improvements. It is essential that surveys and post-completion evaluations include all users, and especially user groups who might potentially no longer visit an area as a result of the environment being made too difficult or dangerous for them.

A.1.12 Deliveries

Delivery drivers need to be instructed never to park in designated accessible parking spaces to unload, or to obstruct entrances, exits or main routes.

A.2 Cleaning

A.2.1 General

An environment which is dirty and clearly not looked after is likely to deter people from using it and can encourage anti-social behaviour; keeping areas clean and tidy makes them more attractive and usable.

Items that can potentially cause trips, slips and falls are less likely to be noticed by people with some impairments, and the severity of an accident can also be much higher for people with pre-existing medical conditions.

A.2.2 External surfaces

Pedestrian routes (footpaths, ramps and steps, parking areas and public open spaces) need to be kept clean, unobstructed and free of contamination from surface water, snow, ice, leaves, lichen, debris, etc., at all times. Contamination generally reduces the slip resistance of the surface, and snow and ice make it ineffective. Winter maintenance regimes need to include salting for frost and ice on

© THE BRITISH STANDARDS INSTITUTION 2018 – ALL RIGHTS RESERVED

Licensed copy: Aston University OpenAthens , Aston University, Version correct as of 25/03/2020

primary pedestrian routes, including in particular steps and ramps. Debris and litter can be a slip and trip hazard.

Pedestrian routes and areas need to be kept free of dog excrement, which can be a slip hazard, is a danger to young children, and is unpleasant to have on shoes or wheels. Providing bags and bins, and regular cleaning, can reduce this risk.

Drainage outlets need to be kept clear of leaves, debris and anything that can prevent water draining away, to avoid surplus surface water and puddling. Care is needed to ensure that any cleaning materials, equipment or maintenance regimes do not damage the surface finish or its slip resistance.

Staff/contractors responsible for street cleaning, waste collection and litter removal are likely to notice where surfaces have become dangerous and can be encouraged to report this so that remedial action can be taken.

A.2.3 Signage and information

All signs and information boards need to be kept clean so that the visual contrast is maintained and they are easily identifiable and readable. This is particularly important for people who are blind and partially sighted. It can also help to discourage graffiti and vandalism, which deter some people, such as older people, from using spaces.

A.2.4 Lifting appliances, escalators and moving walks

Lifting appliances can be subject to vandalism and graffiti. Regular/daily cleaning helps to ensure that they remain operational and pleasant to use.

Escalators and moving walks require regular cleaning to ensure their safe operation, as dirt and litter can affect their mechanical operation and the safety of people using them.

A.2.5 Public facilities

Public facilities, such as recreation and play areas and sanitary facilities, need to be kept clean so that they do not deter people from using them and are safe, easy and pleasant to use.

A.2.6 Seating and street furniture

Seating and street furniture need to be cleaned regularly so that they remain functional and safe.

A.2.7 Lighting

External light fittings require regular cleaning and inspection to ensure that lighting levels are maintained.

A.2.8 Sanitary accommodation

Cleaning staff and contractors need to be made aware of the importance of hygiene and of why the positioning of items within sanitary facilities is critical. Common problems are bins left in the transfer zone, not restocking with toiletries or placing these out of reach for some people, or tying up the alarm pull cord.

The selection of cleaning products needs to be undertaken carefully, giving thought to facility users who might be adversely affected by their use. Perfumed products can adversely affect people with allergies, chemical sensitivities or respiratory conditions. Automated air fresheners and sprays in washrooms, etc., can have the same effect.

NOTE Attention is drawn to the Control of Substances Hazardous to Health (COSHH) Regulations 2002 [37].

 © THE BRITISH STANDARDS INSTITUTION 2018 – ALL RIGHTS RESERVED

Licensed copy: Aston University OpenAthens , Aston University, Version correct as of 25/03/2020

A.3 Maintenance

A.3.1 General

All surfaces, structures, fixtures and fittings require maintenance to ensure that they remain safe and fit for purpose for everyone to use.

A.3.2 Steps and stairs

Nosings are the most trafficked and vulnerable part of stairs. Nosings can be replaced as they wear with reasonable maintenance, skill and care. As such they can maintain their slip resistance and their accessible and visual role, and can extend the useful life of the stair.

A.3.3 External surfaces

All external routes (roads, pedestrian routes, shared cycleways, including ramps and steps, cycle routes and hard-surfaced pedestrian open spaces) need to be regularly checked to ensure that they are not damaged or worn and that they retain their slip resistance, stability, flatness and colour, and can be used easily and safely. Any damage (e.g. potholes, loose slabs, damaged joints, loose nosings, uneven surfaces) needs to be repaired as soon as possible.

Road markings need to be regularly maintained so that they remain clearly visible.

Other items requiring maintenance to avoid accidents include inspection covers, manholes and gully gratings. It is particularly important that such items are correctly repositioned after maintenance.

Tactile paving needs to be regularly inspected, and action taken as necessary, to ensure its effectiveness.

A.3.4 Trees, planting and soft landscaping

Trees and hedges need to be inspected and maintained regularly so that branches do not obstruct high vehicles, mask signs or cause a potential hazard if they fall, and so that branches and roots do not obstruct or damage vehicular or pedestrian routes. Particularly high levels of maintenance might be necessary where leaf or fruit fall is likely to cause slippery surfaces at certain times of the year.

Planting needs to be maintained regularly so that it does not obstruct pedestrian routes or essential sightlines, or cover signage. Vegetation needs to be trimmed or cut back if it projects across pathways within a zone extending from ground level up to 2.5 m. Raised planters need to be maintained to ensure that any plants within the planter do not intrude over pedestrian routes and create a trip hazard or obstruction.

Grassed and soft landscaped areas need to be regularly maintained so that they remain attractive and usable: overgrown areas deter people and are more likely to be subject to anti-social behaviour and vandalism.

A.3.5 Mechanical equipment

All mechanical equipment (e.g. access gates/barriers, lifting appliances, escalators and moving walks) needs to be regularly inspected and serviced in accordance with the manufacturer's guidance and relevant standards.

A.3.6 Communication systems

All communication systems, particularly those for emergency use in lifting appliances, on escalators and moving walks, at access control systems and in accessible toilets and Changing Places toilets, need to be checked regularly to ensure that they are usable, reachable and in working order at all times.

© THE BRITISH STANDARDS INSTITUTION 2018 – ALL RIGHTS RESERVED

Licensed copy: Aston University OpenAthens , Aston University, Version correct as of 25/03/2020

A.3.7 Public facilities

Facilities for public use (e.g. recreation and play areas, sanitary facilities) need to be regularly inspected and maintained to ensure that all equipment and fittings are in a safe, usable condition and securely fixed.

A.3.8 Seating and street furniture

Seating, street furniture, fences and barriers require regular inspection to ensure that they are not damaged, and maintenance to ensure that they are safe, serviceable, securely fixed and retain visual contrast.

A.3.9 Lighting

Lighting needs to be regularly checked to ensure that all lamps are working. Broken lamps need to be replaced as quickly as possible so that lighting levels are not reduced and safety, surveillance and security are maintained. When replacing individual street lamps or external lighting, lamps need to have a similar lux output, as large variations in levels can be quite disabling for many older people and people who are blind or partially sighted, as their eyes are slower to adjust.

Annex B (informative) Using light reflectance values (LRVs) to assess visual contrast

B.1 LRVs and visual contrast

For people with good vision, differences in hue (the nature of the colour) or chroma (the intensity of the colour) provide adequate visual contrast. Unfortunately, this is not the case for all people who are blind or partially sighted. The main feature of a surface, which appears to be strongly correlated with the ability of people who are blind or partially sighted to identify differences in colour, is the amount of light the surface reflects, or its light reflectance value (LRV).

The LRV scale runs from 0, which is a perfectly absorbing surface that could be assumed to be totally black, up to 100, which is a perfectly reflective surface that could be considered to be the perfect white. Because of practical influences in any application, black is always greater than 0 and white never equals 100. For a definition of light reflectance value, see **3.10**.

The evidence-based research available to date allows a degree of variability concerning the minimum LRV difference that is required to provide adequate visual contrast for people who are blind or partially sighted (see *Project Rainbow, a research project to provide colour and contrast design guidance for internal built environments* [38]). That variability is shown in Figure B.1. With the axes representing the LRV of two adjacent surfaces, the zones on the graph give an indication of where visual contrast is likely to be good, acceptable or poor. Whilst there is considerable confidence in recommending a difference in LRV of 30 points or more (the good zone), there is also some evidence to suggest that a difference of around 20 points might still be acceptable, provided the illuminance on the surfaces is 200 lux or more. Differences less than about 20 points might not give adequate contrast, even with an illuminance of 200 lux on the surfaces. On an overcast day in the UK the illuminance at ground level can be over 5 000 lux.

In the case of external door opening furniture, the ease with which people who are blind or partially sighted are able to distinguish furniture against its background is influenced by its 3-D form (giving

 © THE BRITISH STANDARDS INSTITUTION 2018 – ALL RIGHTS RESERVED

light and shade) and the shiny nature of the finish, whether metallic or non-metallic. For such products, it is considered that a difference in LRV between the product and its background of at least 15 points is acceptable.

NOTE For flat surfaces, it is thought that LRV differences are less important between two large areas, e.g. between wall and floor, than between a small object on a larger background surface, e.g. a bell or key pad on a wall.

It is for reasons of weathering, cleanliness, climate conditions and variations in lighting levels (e.g. in strong sunlight or after dark) that, externally, differences in LRV will not always be appreciated in the same way as they would be under controlled internal conditions. However, it is still considered good practice to aim for the recommended LRV differences in the external environment, in the initial specification of external surfaces.

Additional information on the provision of colour and contrast can be found in *The colour, light and contrast manual – Designing and managing inclusive built environments* [39].

Figure B.1 — *Zones of good, acceptable and poor visual contrast in relation to the LRV of two adjacent surfaces*

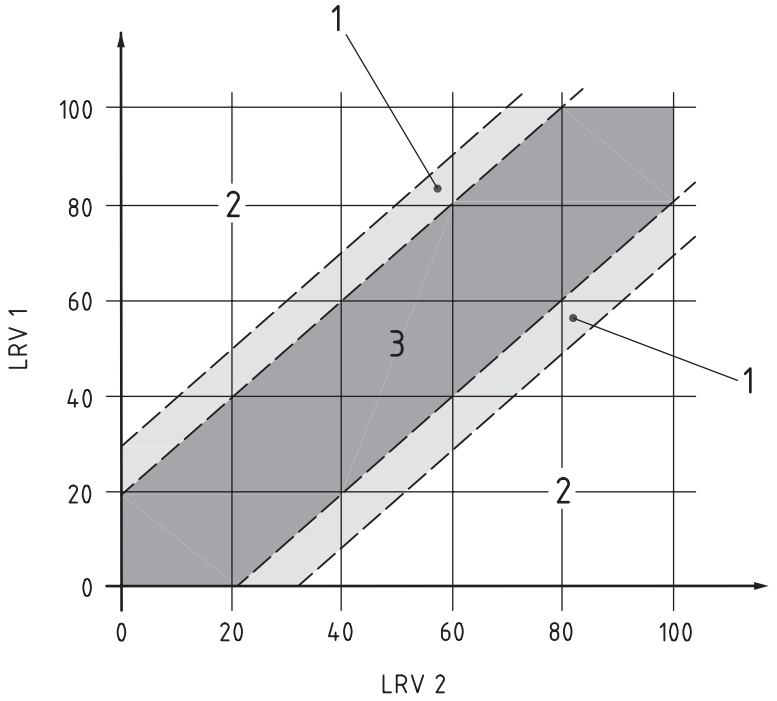

Key

1	Acceptable for large areas
2	Good
3	Poor
LRV1	Light Reflectance Value of surface 1 [points]
LRV2	Light Reflectance Value of surface 2 [points]

B.2 Methods of measuring LRVs

B.2.1 The BS 8493 test method

A test method for measuring the LRV of flat surfaces with opaque paint systems or coverings, flat opaque materials, including those coated with non-opaque coatings, or coverings and multi-coloured surfaces, is described in BS 8493.

NOTE This test method is suitable for manufacturers, researchers and those requiring accurate standard measurements.

The method is suitable to determine the LRVs of products for which visual contrast is an issue, including paints and coatings, paving materials and finished metals. The effect of wetting external materials is variable, therefore the LRV of materials should be determined when wet and dry to ensure that the minimum LRV difference is achieved.

Licensed copy: Aston University OpenAthens , Aston University, Version correct as of 25/03/2020

As a guide for designers, the LRVs of the 100 colours in the BS 4800 range have been determined in accordance with BS 8493 and are set out in Table B.1. It is emphasized, however, that the LRVs of any colour range can be determined using the BS 8493 test method. It is expected, therefore, that product manufacturers will use the standard to prepare LRV data for their own particular colour ranges.

The LRVs determined using BS 8493 are applicable to surfaces of products or materials as they leave the factory gate. There is no inference or specification within BS 8493 to take account of the ageing effects of wear and tear, maintenance, cleaning or any other events which might affect the nature of the surface, including weathering. It is recognized that further research is required into these factors before authoritative guidance can be provided on the effect of ageing on LRVs.

Table B.1 — *Light reflectance values associated with the BS 4800* [A)] *range of colours*

Code from BS 4800	**LRV**	**Code from** BS 4800	**LRV**
00A01	66	10D43	39
00A05	44	10D45	22
00A09	23	10E49	74
00A13	10	10E50	65
02C33	59	10E53	57
02C37	22	12B15	77
02C39	10	12B17	58
02C40	7	12B21	32
04B15	75	12B25	14
04B17	59	12B29	7
04B21	31	12C33	58
04C33	57	12C39	9
04C37	21	12D43	29
04C39	10	12D45	14
04D44	14	12E51	55
04D45	9	12E53	40
04E49	76	14C31	76
04E51	30	14C35	43
04E53	16	14C39	10
06C33	57	14C40	7
06C37	21	14E51	34
06C39	10	14E53	22
06D43	29	16C33	58
06D45	14	16C37	22
06E50	57	16D45	10
06E51	40	16E53	23
06E56	20	18B17	60
08B15	83	18B21	33
08B17	60	18B25	16
08B21	31	18B29	6
08B25	15	18C31	81
08B29	7	18C35	42
08C31	77	18C39	10

[A)] BS 4800 comprises a schedule of 100 colours for paints, and their available surface finishes. It includes, within a folder, an explanatory text, and a mask for use in conjunction with BS 5252 which illustrates the colours specified in BS 4800. BS 4800 is to be read in conjunction with BS 5252.

 © THE BRITISH STANDARDS INSTITUTION 2018 – ALL RIGHTS RESERVED

Licensed copy: Aston University OpenAthens , Aston University, Version correct as of 25/03/2020

Licensed copy: Aston University OpenAthens , Aston University, Version correct as of 25/03/2020

Table B.1 *(continued)*

Code from BS 4800	**LRV**	**Code from** BS 4800	**LRV**
08C35	42	18D43	22
08C37	21	18E49	77
08C39	10	18E50	62
08E51	45	18E51	33
10A03	56	18E53	16
10A07	31	20C33	60
10A11	14	20C37	23
10B15	81	20D45	11
10B17	59	20E51	34
10B21	33	22B15	78
10B25	15	22B17	57
10B29	6	22C37	21
10C31	76	22D45	10
10C33	67	24C33	57
10C35	42	24C39	10
10C39	10		

NOTE The LRV has been determined in accordance with BS 8493.

[A)] BS 4800 comprises a schedule of 100 colours for paints, and their available surface finishes. It includes, within a folder, an explanatory text, and a mask for use in conjunction with BS 5252 which illustrates the colours specified in BS 4800. BS 4800 is to be read in conjunction with BS 5252.

B.2.2 Hand-held colorimeter

The LRV of a surface can also be determined using a hand-held colorimeter or reflectometer of 0°/45°geometry. Two methods are possible. In the first method, the hand-held colorimeter is used in conjunction with a white, high reflectance standard surface. Since the reflectance of the white standard surface is known, it is possible to calculate the reflectance of the surface of interest by measuring the luminance of both surfaces under the same lighting conditions, where luminance is amount of light emitted from a surface. This is commonly termed the brightness of the surface. The LRVs measured in this way are dependent on the ambient daylighting, which together with date, time and the weather conditions, needs to be quoted in relation to any measurements taken.

In the second method, the hand-held colorimeter is placed on the surface and configured to read CIE Y, x y or a reflectometer calibrated to a colour reference sample with a known LRV.

Neither of these methods are suitable for curved or metallic surfaces, nor are they suitable for glossy surfaces. Whilst the LRVs determined by this method are useful, they are not as accurate as those obtained by using the test method in BS 8493.

NOTE This method of measurement is suitable for on-site measurements where an approximation of LRV is sufficient.

B.2.3 Approximate method using colour swatches

The LRV of a surface can be approximated by reference to colour swatches or panels of colour samples. The LRV of the various colours can be obtained from the manufacturer of the colour swatches or samples, who is able to determine the LRV of each colour using the method described in BS 8493. In some cases, the colour notation on the sample includes the LRV. By placing the colour swatch against the coloured surface of interest, a reasonable match can be identified. The LRV of the nearest colour match from the swatch can then be assumed to be the LRV of the surface of interest.

The LRVs measured in this way are also dependent on the ambient daylighting, which together with date, time and the weather conditions, needs to be quoted in relation to any measurements taken. This approximate measurement method is also not able to accurately assess the influence of gloss on LRV.

NOTE This very approximate method can be used for the initial selection of colours for design purposes and for preliminary site assessments.

Annex C (informative) Space allowances for wheelchair manoeuvring and access to vehicles

NOTE The measurements given in this annex are based on ergonomic research commissioned by the Department of the Environment, Transport and the Regions (DETR) in 1999. This research, which involved user trials and computer-aided design (CAD) analysis, was used to establish ranges of dimensions that can be applied to common activities for users of wheelchairs and electric mobility scooters, such as turning and manoeuvring in corridors, in access routes and in car parking areas. This part of BS 8300 gives the results that are applicable in an external environment. BS 8300-2 gives the results that are applicable within buildings.

C.1 User trials on space requirements

During the trials, the research team first measured the space required when occupied and unoccupied wheelchairs were stationary, then they measured the space required when wheelchair users turned their wheelchairs through 90° and 180°. CAD and trials data were also used to determine the space required for wheelchair users to manoeuvre at the side of vehicles.

The results are tabulated for each type of wheelchair and each type of movement as follows:

a) manoeuvring at the side of vehicles (see Table C.1 and Table C.2);

b) in a stationary position (see BS 8300-2:2018, Table G.1, Table G.2, Table G.3, Table G.4 and Table G.5);

c) when turning through 90° (see BS 8300-2:2018, Table G.6, Table G.7, Table G.8, Table G.9 and Table G.10);

d) when turning through 180° (see BS 8300-2:2018, Table G.11, Table G.12, Table G.13, Table G.14 and Table G.15).

C.2 Space at the side of a vehicle

Table C.1 illustrates the space necessary at the side of a vehicle, or between vehicles, e.g. in a car park applying the trials measurements previously outlined.

C.3 CAD analysis

Table C.2 indicates the width requirements for various activities performed at the side of a vehicle or between vehicles in a car park, using CAD (computer-aided design) analysis.

 © THE BRITISH STANDARDS INSTITUTION 2018 – ALL RIGHTS RESERVED

Licensed copy: Aston University OpenAthens , Aston University, Version correct as of 25/03/2020

Table C.1 — *Width required at the side of a vehicle or between vehicles in a car park*

Activity (90% of users accommodated)	**Self-propelled wheelchair** [A)] mm	**Electrically propelled wheelchair** [A)] mm	**Attendant pushed wheelchair** [A)] mm	**Electric mobility scooter** [A)] mm
Moving in a straight line, e.g. going to the front of the vehicle after alighting 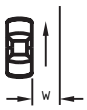	1 050	950	950 [B)]	1 000 [B)]
Turning 180° at the side of a vehicle, e.g. to gain access to the boot 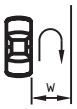	1 500	1 625	1 800 [B)]	2 200 [B)]

[A)] Based on trial measurements.

[B)] These widths, which relate to the small samples of scooters (n = 5) and attendant pushed wheelchairs (n = 6), are those needed to accommodate the whole sample.

Licensed copy: Aston University OpenAthens , Aston University, Version correct as of 25/03/2020

Table C.2 — *Widths for access at the side and the rear of a vehicle or between vehicles in a car park*

Activity by a person in a self-propelled wheelchair	Space required [A)] mm
a) Opening a vehicle door (two-door vehicle)	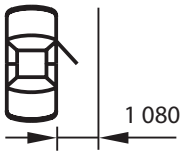
b) Using a roof hoist with an assistant	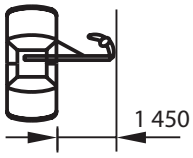
c) Using an internal hoist with an assistant	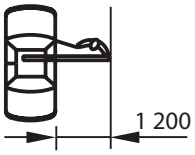
d) Being helped by an assistant (width for the assistant) (see BS 8300-2:2018, Table G.1, Table G.2, Table G.3, Table G.4 and Table G.5 for widths of wheelchairs and electric mobility scooters)	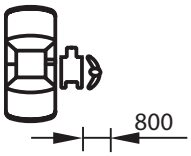
e) Using a ramp at the side of a vehicle (max.) (height from ground to vehicle floor = 560 mm)	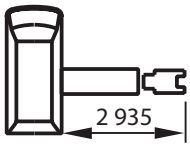
f) Using a ramp at the rear of a vehicle (height from ground to vehicle floor = 560 mm)	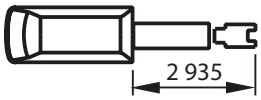
g) Using a side-lift (perpendicular)	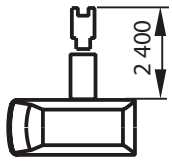
h) Using a tail-lift (parallel)	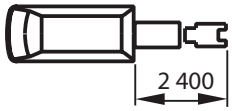

[A)] Based on CAD measurements.

Licensed copy: Aston University OpenAthens , Aston University, Version correct as of 25/03/2020

 © THE BRITISH STANDARDS INSTITUTION 2018 – ALL RIGHTS RESERVED

Annex D (informative) Temporary external events

COMMENTARY ON ANNEX D

This annex gives guidance that can assist managers of external temporary events in providing suitable access and facilities for disabled people attending the event.

D.1 Ticketing policy

Provision needs to be made for a minimum of one level access wristband exchange or box office for ticketed events.

Provision needs to be made for an induction loop or other audio enhancement at the ticket exchange or box office for ticketed events.

Temporary ticket or wristband exchange locations need to provide both high- and low-level counters (see BS 8300-2). Where windows in a unit are raised then the reduction from finished floor level may be accommodated by a suitable ramp and platform (see 9.2).

Where e-ticket scanning is available, at least one scanner needs to be within the reach range of a wheelchair user (see BS 8300-2:2018, Annex E).

Recommendations for assistive listening systems are given in BS 8300-2:2018, **13.2**.

D.2 Information

The following is a non-exhaustive list of information that can be provided to give details of the access and facilities that will be available to people attending an event. This information needs to be available on a website and in accessible print formats.

a) Introduction. Provide a short overview of the event and communicate the inclusive vision/policy regarding access and facilities for disabled people.

b) Contact details. Provide the following contact details:

- a named person as a point of contact and/or their job role, e.g. “Access Officer”;
- email – use a dedicated access@ email address rather than generic info@ address where possible;
- phone number;
- postal address;
- estimate of response time to assist in providing continuity of customer service in relation to specific access requirements;
- link to a downloadable document for all access information.

c) Site description. Provide a description of the site so that potential attendees can make informed decisions about planning their attendance – for example, regarding any mobility-related equipment they might require. This can reduce the number of direct customer enquiries ahead of the event. Include the following information:

- a general description of the site, including terrain and any potential impact of varying weather conditions;

Licensed copy: Aston University OpenAthens , Aston University, Version correct as of 25/03/2020

Licensed copy: Aston University OpenAthens , Aston University, Version correct as of 25/03/2020

- whether the routes into and around the event are soft or hard surfaces;
- the number of stages/performance locations/activities;
- the distances from accessible campsite/car parks/public transport arrival points to all major activities, in miles/kilometres;
- the availability of calm and quiet spaces.

d) Bookable access facilities. Provide the following information.

- Free tickets for personal assistants. Describe the scheme and how free tickets can be obtained. Free tickets enable a disabled person to bring a personal assistant/support worker, and are a form of reasonable adjustment that enables people who require support due to an impairment or long-term medical condition to attend the event. It is reasonable to request evidence to support an application for free tickets.
- Access to viewing platforms/viewing areas (if applicable). Describe the locations of all viewing platforms/areas. Describe the accreditation and stewarding system, and inform customers of the location of the accessible toilets (including, where available, Changing Places toilets) located nearest to/at viewing platforms/areas.
- Accessible campsite (if applicable). Describe the campsite location, the facilities and assistance available on the campsite, and any campervan policy.
- Accessible parking (if applicable). Describe the location of designated accessible parking spaces, the stance to wristband collection/entrance (if applicable) and the distance to the accessible campsite (if applicable).
- How to apply for bookable access facilities. Describe the process and the forms to be completed, and any evidence accepted (if required).

e) Travel guide. Provide any relevant information regarding:

- accessible parking (if not included under bookable access facilities);
- taxi drop-off for customers going to any access wristband exchange/accessible campsite;
- public transport;
- shuttle transfers from transport hubs, including details of accessible shuttle buses.

Determine how an alternative accessible service could be provided if required.

f) Arrival guide. Provide the following information:

- site opening times, what happens on arriving on site, where to collect tickets or wristbands (if applicable), and what customers will need with them in order to collect wristbands;
- a clear map showing:
  - the arrival location in relation to parking/drop-off;
  - the location of the parking relative to the main entrance and wristband exchange;
  - the location of the toilets, stage(s) and event facilities;
  - the location of any designated accessible surfaces, pathways or trackways;
  - the location of calm and quiet spaces;
  - the location of dog spending areas.

Walking distances can be kept to a minimum by locating accessible parking, the access wristband gate and accessible camping/the arena as close to each other as possible.

 © THE BRITISH STANDARDS INSTITUTION 2018 – ALL RIGHTS RESERVED

Licensed copy: Aston University OpenAthens , Aston University, Version correct as of 25/03/2020

g) Toilets. Provide the following information:

- toilet block provision (see BS 8300-2:2018, Clause **18** for details on the provision of accessible toilets);
- provision of toilets on campsites;
- provision of toilets at viewing platforms (if not at viewing platforms, provide distance to nearest toilet);
- location of Changing Places toilets, where provided.

h) Medical and welfare services. Provide the following information:

- services on site, including the location of charging points;
- distance from accessible campsite to medical and welfare services (if applicable);
- fridge storage policy (if applicable);
- contact details for any specific questions relating to a medical need. It is essential that provision is made to enable people to store medication somewhere on site, ideally as close as possible to any accessible camping and within a step-free and 24 h-accessible structure.

i) Assistance dogs. Describe event policy, making clear that it is a legal requirement to accommodate assistance dogs on site.

j) Strobe lighting. Describe event policy.

D.3 Transport

Where events are providing local transport options, accessible provision is required. This could include alternative options such as an accessible taxi, taking care that the alternative does not cost more than any non-accessible provision. All transport locations need to be clearly defined and signposted to ensure that everyone needing the facility can find it easily. Seating and resting points need to be located where people need to wait for transport.

D.4 Accessible parking

For any event where parking is provided, accessible parking provision is required that is adequate for the expected number of attendees. Accessible designated Blue Badge parking spaces also need to be provided in suitable numbers. Accessible parking can be provided in two forms: standard sized parking spaces and wheelchair-accessible parking spaces. Both types of spaces need to be clearly signed and located with minimal walking distance between the parked car, venue entrance, transport and other essential services.

Accessible parking provision needs to be located such that the shortest distance is covered between the parking area and ticket exchange/box office for ticketed events and the accessible provision or parking area and accessible provision for non-ticketed events.

The location needs to be selected such as to achieve the most level firm surface, either by using existing hard surfaces or a temporary surface. For parking provided on greenfield sites, layout requires careful planning to ensure as far as possible that paths are usable for people to leave and return to their cars if ground conditions become muddy and wet.

In addition to standard-sized spaces that are located to reduce the travel distances to services, provision is also needed for wheelchair users, with spaces sized, signed and located in accordance with 7.4.1.

Provisions for weekend camping customers need to include the provision of accessible parking, and a dedicated entrance to allow access to the accessible parking if necessary (this could require a pre-booked festival-specific pass, or simply a Blue Badge presented on site).

It is helpful to provide stewards to help carry bags to the accessible campsite. If the car park is over 250 m from the campsite, a shuttle service can be provided, or customers can be allowed to drop off tents and bags in the campsite or drive into the campsite to unload before taking their cars to the car park. Day customers can be allowed to park and claim wristbands at the gate nearest to the arena.

D.5 Pedestrian queuing and screening areas

Many events have queuing and/or screening areas. Some events require security screening or bag searches. Others require admission control to ensure orderly and efficient entrance arrangements (e.g. checking that head counts are not exceeded for licensing or fire control purposes).

Pedestrian queuing or screening areas need to be accessible wherever practicable. Where it is not practicable for all areas to be accessible, specific accessible entry points can be clearly identified with the International Symbol for Access (see BS 8300-2:2018, Figure 9) on a 600 mm × 600 mm sign at a minimum height of 2 500 mm above ground level, enabling decisions to be made by visitors at the point where security lanes need to be entered. All accessible wheelchair screening lanes need to have an effective clear width of 1 200 mm, including any projecting support at the base.

Where large numbers of queuing or screening areas are provided at each location then a minimum of 5% needs to be of the wider accessible type.

Accessible queuing or screening areas need to be located as close to the pedestrian approach routes as possible.

It is good practice to make seating available for people who might be less able to stand while queuing, in such a way that their place in the queue is secured.

A support rail as part of the queuing system would benefit a wide selection of users.

D.6 Horizontal movement

D.6.1 General

Passing places on access routes are covered in **8.1.3**.

For sport-specific events, a minimum of 2 400 mm width is needed to areas where athletes will be using their competition wheelchairs. This includes all routes to and from the field of play and to enlarged athlete toilet or changing areas.

D.6.2 Hard standing, paths and temporary flooring or tracking

It is important to make the best use of available hard standing and paths throughout the event site. Siting stages, viewing platforms, food stalls and other activities within easy reach of existing hard standing and paths can benefit the greatest range of people.

Where hard standing or paths are not available, temporary surfaces are a useful tool to ensure that routes around an event are maintained during wet weather. The following characteristics can be incorporated into the temporary surface to ensure that it meets the requirements of those attending.

a) Some temporary surfaces have raised bolts within the routes as part of its fixings. These are not to be used on pedestrian routes.

 © THE BRITISH STANDARDS INSTITUTION 2018 – ALL RIGHTS RESERVED

Licensed copy: Aston University OpenAthens , Aston University, Version correct as of 25/03/2020

Licensed copy: Aston University OpenAthens , Aston University, Version correct as of 25/03/2020

b) Transition pieces are important to allow individuals to move easily between different surfaces or on and off the temporary surface at key points. These need to be located where an individual might wish to leave or access the temporary surface.

c) The temporary surface needs to contrast visually against the ground or have highlighted edges.

d) If temporary surface is laid over uneven ground then it is likely to distort and can create a trip hazard at joints or edges. Ground needs to be prepared, suitable main routes determined and, if required, alterations to the ground finish be made prior to laying. Trackway needs to be checked regularly for the duration of the event and maintained in a safe condition.

Undulations can be uncomfortable for many users and can prevent them gaining access to the trackway.

On steep inclines, people with an ambulant mobility impairment might require additional assistance to maintain balance. Recommendations for handrails are given in 9.3.

D.6.3 Cable covers

Careful planning of services and media requirements is needed to anticipate where cables might be located away from pedestrian areas, such as underground or supported overhead. Where this is not possible then suitable cable covers are required.

It is important to ensure that cable management does not compromise the accessibility of pedestrian routes, e.g. that the width of pedestrian routes is not reduced by laying cables along the route.

Where cable covers have to be laid across a path, this needs to be done on the most level part of the path. A spacing of at least 1 570 mm is recommended between successive cable covers for the convenience of wheelchair users.

Cable covers need to allow wheelchair users to travel over them easily. They also need to contrast visually with the underlying road or path to ensure that they are not a trip hazard to pedestrians.

D.7 Accessible viewing areas and platforms

Accessible viewing areas and platforms vary depending upon what is appropriate for the particular external event, but all stages and activity areas need to have good, clear sightlines to ensure that all spectators have a similar experience in terms of choice and viewing quality.

D.8 Temporary raised stands

D.8.1 All accessible seating

The following guidance applies to all accessible seating.

a) Sight lines need to be unimpeded, not blocked when people in front stand up. This may include the use of modular platform systems.

b) Seats need to have a minimum seat height of between 450 mm to 475 mm.

c) All seating needs to contrast visually with the background against which it is seen.

D.8.2 Ambulant accessible seating

A 1% provision is suitable for accessible seating which serves a number of different users. Accessible seating needs to be dispersed around a stadium or stand to offer different viewing locations. It can be allocated at various locations including the ends of seat rows, close to entrances or with minimal stepped access which can assist someone who cannot walk distances or use steps easily. End of

Licensed copy: Aston University OpenAthens , Aston University, Version correct as of 25/03/2020

row seats or those with bigger leg room might be suitable for people with an assistance dog or who are unable to bend their knees. Clear sight of video screens or scoreboards can allow Deaf or hard of hearing spectators who have difficulty hearing the public address system. The location of site services, including concessions and toilets, also needs to be determined.

The following specific factors need to be taken into account.

a) Benches are not suitable for accessible seating.

b) Accessible seating for someone with an ambulant disability needs a clearway of 650 mm.

c) Accessible seating needs to be located where there are a minimal number of steps or preferably none.

d) Handrails are required where accessible seating is accessed by steps.

e) Arm rests give additional support for many visitors including disabled or elderly visitors when sitting and standing. Some arm rests need to fold down at the ends of rows to allow potential access for wheelchair transfer.

f) Accessible seating needs to be located near to space that can be used for wheelchair or mobility aid storage.

g) Some accessible seating needs to be located where the rake of the seating is not more than 20°.

h) The seat needs to be at least 500 mm wide.

Additional guidance is given in *Accessible stadia* [40].

D.8.3 Wheelchair and electric mobility scooter (EMS) accessible seating

Wheelchair and EMS users need to have a choice of locations which are no less desirable than those available to anybody else. The positions need to be located and designed to ensure that they can be accessed independently. Wheelchair and EMS users need to be able to manoeuvre easily in and out of their position and have clear sight lines to the event, even if people in front of them stand up.

All wheelchair and EMS accessible spaces need to be provided with a minimum of one companion seat. Ideally the layout and provision will allow flexibility, ensuring that wheelchair and EMS users can sit together and that ambulant companions can also sit as part of the same party.

Site lines need to be unobstructed by columns, handrails, camera positions or photographers.

Raised platforms can be provided for wheelchair and EMS users, their companions and people who cannot stand for great lengths of time. In some locations it might be more suitable to demarcate areas next to the course or event that are only available to wheelchair and EMS users or people of short stature to ensure that some space is kept for this purpose.

Guidance on numbers for wheelchair accessible viewing areas is given in *Accessible stadia* [40] and its supplementary guidance [41].

D.9 Toilet accommodation

General recommendations for toilet accommodation are given in BS 8300-2:2018, **18.5**. In some external and high volume locations it might not be possible to install these facilities, but smaller portable alternatives are available and can provide enlarged toilets which will accommodate more users. It is important to determine the range of facilities that can be made available, assessing the suitability of location and then communicating that to visitors before and during events.

 © THE BRITISH STANDARDS INSTITUTION 2018 – ALL RIGHTS RESERVED

Unisex accessible toilets need to be located as close as possible to accessible seating areas to minimize the distances that need to be travelled to reach the facility. They also need to be located with other sanitary facilities to ensure that choice is available at all locations.

D.10 Changing Places toilets

At larger events a Changing Places toilet needs to be provided at an easily accessible location and ideally in close proximity to managed facilities. Such events could include festivals, open air music concerts, and other events aimed at large visitor numbers which are open to the general public, such as national exhibitions, where people are likely to have travelled from a distance. Recommendations for Changing Places toilets are given in BS 8300-2:2018, **18.6**.

Annex E (informative) Space allowances for people passing on an access route

Figure E.1 shows the recommended space allowances for people passing on an access route.

Figure E.1 — *Space allowances for people on an access route*

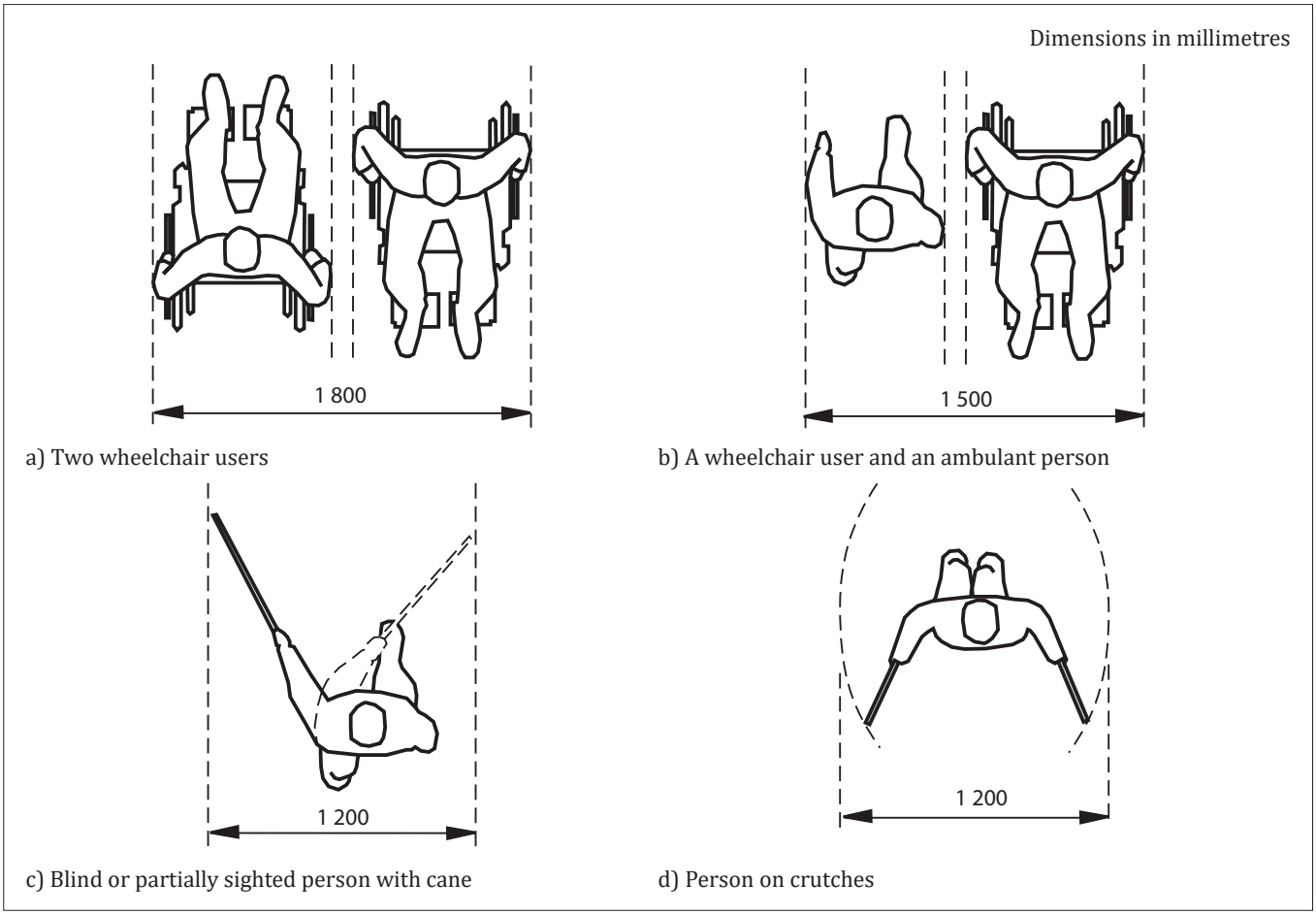

Licensed copy: Aston University OpenAthens , Aston University, Version correct as of 25/03/2020

Annex F (informative) Slip potential characteristics of treads, ramp surfaces and floor finishes

COMMENTARY ON ANNEX F

Many products used for tread and floor finishes will change significantly, merely on installation. Wear, anticipated usage, potential contamination, cleaning and maintenance regimes, will all have an impact on the performance of a tread or floor finish over its lifetime.

Further guidance can be obtained from the following publications.

- *Information to assist in assessment of the slip resistance of floor surfaces is given in HSE information sheet* Assessing the slip resistance of flooring *[42].*
- *Comprehensive advice on reducing the risk of slipping on surfaces is given in CIRIA publication C652 [43].*
- *General advice on floor finishes as they relate to inclusive design, including slip resistance, can be found in the* CAE specifiers' handbook on internal floor finishes *[44].*

F.1 Background

Surfaces for walking or wheeled traffic need to be selected to ensure, as far as is possible, that traction between the foot or wheel can be maintained under normal conditions of use. This entails specifying materials that have an appropriate coefficient of friction, offering a surface that reduces the potential for slips whilst also allowing passage without undue effort due to levels of friction being too great.

Excessive levels of traction can themselves be a barrier to use, particularly to wheeled traffic or where the foot remains in contact with the surface during walking.

Sudden changes in the frictional characteristics of a surface can cause a person to stumble and fall or otherwise lose control. Where there is a change in the characteristics of materials on an access route, transition needs to be level and to offer similar frictional characteristics. Where this is not practical, differing surfaces need to contrast visually to identify the change in material and reduce the potential for an incident.

F.2 Slip resistance

The following indices are used to indicate the slipperiness of surfaces:

a) pendulum test values (PTVs) obtained using a pendulum tester in line with BS 7976-2;

b) surface micro-roughness (Rz) measurements using a stylus instrument in accordance with BS 1134.

Detailed information on assessing slip resistance, together with a table illustrating common surface materials and their dry and wet slip resistance values (SRV), also known as pendulum test values (PTV), can be found in BS 5395-1:2010, Clause **7**.

NOTE Depending on the precise nature of the wearing surface, seemingly similar products made from the same material can be totally different in terms of their slip potential characteristics.

 © THE BRITISH STANDARDS INSTITUTION 2018 – ALL RIGHTS RESERVED

Licensed copy: Aston University OpenAthens , Aston University, Version correct as of 25/03/2020

F.3 External surfaces

Where weather and low temperature results in surfaces being covered in snow or ice, the slip resistance of a surface ceases to be effective. It is therefore important that external pathways and ramp surfaces are kept free of snow or ice as part of the management regime.

On a level surface, a material that gives a wet PTV greater than 36 is considered to be suitable where the surface is likely to become wet. However, a material with a wet PTV greater than 40 is considered to be more appropriate for a surface when a user is likely to be turning or pushing (e.g. when pushing a person in a wheelchair).

F.4 Ramps and sloping surfaces

On a sloping surface, the lateral component of the force in contact with the surface increases as the gradient of that surface increases. To compensate for this, a sloping surface needs to have a higher coefficient of friction than an equivalent level surface to maintain the same degree of traction.

The additional slip resistance can be approximated for the gradients recommended for ramps by expressing the gradient as a percentage and adding this to the SRV for an equivalent level surface. For example, for a 1:20 slope, the gradient is 5% and the required SRV is increased by 5. For a 1:12 slope, the gradient is 8.3% and the SRV needs to be increased by 8.3.

Where a ramp is likely to become wet, the recommended wet PTVs for ramps of different gradients are, therefore, increased from 40 to 45 for shallow ramps of 1:20 and to 49 for the steepest recommended gradient of 1:12.

Materials that are likely to achieve such wet PTVs include floated concrete, acid-etched ceramic tiles and some epoxy coatings with granular aggregate.

F.5 Step nosings

Where slip resistance is required for nosings and treads, the slip resistance needs to be equivalent to that expected for level surfaces. A PTV greater than 36 is considered to be suitable, as pushing and turning are unlikely on stairs. On existing nosings, the slip resistance of step nosings are generally expressed by their Rz roughness value as PTV is difficult to measure. In such cases a roughness Rz value of 20 μm is considered to be suitable.

Licensed copy: Aston University OpenAthens , Aston University, Version correct as of 25/03/2020

Licensed copy: Aston University OpenAthens , Aston University, Version correct as of 25/03/2020

Bibliography

Standards publications

For dated references, only the edition cited applies. For undated references, the latest edition of the referenced document (including any amendments) applies.

BIP 2228, *Inclusive urban design — A guide to creating accessible public spaces*

BS 1134, *Assessment of surface texture — Guidance and general information*

BS 4008, *Specification for cattle grids*

BS 4800, *Schedule of paint colours for building purposes*

BS 5252, *Framework for colour co-ordination for building purposes*

BS 5395-1:2010, *Stairs — Part 1: Code of practice for the design of stairs with straight flights and winders*

BS 5709, *Gaps, gates and stiles — Specification*

BS 6465 (all parts), *Sanitary installations*

BS 6571-6, *Vehicle parking control equipment — Specification for pay-on-foot parking control equipment*

BS 7000-6, *Design management systems — Part 6: Managing inclusive design — Guide*

BS 7976-2, *Pendulum testers — Method of operation*

BS 8206-2, *Lighting for buildings — Part 2: Code of practice for daylighting*

BS 8493, *Light reflectance value (LRV) of a surface — Method of test*

BS 9999, *Fire safety in the design, management and use of buildings — Code of practice*

BS EN 81-71, *Safety rules for the construction and installation of lifts — Particular applications to passenger lifts and goods passenger lifts — Part 71: Vandal resistant lifts*

BS EN 115-1:2017, *Safety of escalators and moving walks — Part 1: Construction and installation*

BS EN 13201-2, *Road lighting — Part 2: Performance requirements*

DD CEN/TS 81-83, *Safety rules for the construction and installation of lifts – Existing lifts – Part 83: Rules for the improvement of the resistance against vandalism*

ISO 21542, *Building construction — Accessibility and usability of the built environment*

Other publications

[1] DEPARTMENT FOR CHILDREN, SCHOOLS AND FAMILIES. *Designing for disabled children and children with special educational needs – Guidance for mainstream and special schools*. Building Bulletin 102. *London*: *The Stationery Office*, *2014*.

[2] GREAT BRITAIN. *Equality Act 2010*. *London*: *The Stationery Office*, *2010*.

[3] GREAT BRITAIN. *Building Regulations 2010 and subsequent amendments*. *London*: *The Stationery Office*, *2010*.

[4] GREAT BRITAIN. *Building (Amendment) (Wales) Regulations 2014*. *London*: *The Stationery Office*, *2014*.

[5] SCOTLAND. *Building (Scotland) Regulations 2004 and subsequent amendments*. *Edinburgh*: *The Stationery Office*, *2004*.

 © THE BRITISH STANDARDS INSTITUTION 2018 – ALL RIGHTS RESERVED

Licensed copy: Aston University OpenAthens , Aston University, Version correct as of 25/03/2020

[6] GREAT BRITAIN. *Building Regulations (Northern Ireland) 2012 and subsequent amendments*. *Belfast*: *The Stationery Office*, *2012*.

[7] GREAT BRITAIN. *Regulatory Reform (Fire Safety) Order 2005*. *London*: *The Stationery Office*, *2005*.

[8] SCOTLAND. *Fire Safety (Scotland) Regulations 2006*. *Edinburgh*: *The Stationery Office*, *2006*.

[9] NORTHERN IRELAND. *Fire Safety Regulations (Northern Ireland) 2010*. *Belfast*: *The Stationery Office*, *2010*.

[10] GREAT BRITAIN. *Lifts Regulations 2016*. *London*: *The Stationery Office*, *2016*.

[11] GREAT BRITAIN. *Supply of Machinery (Safety) Regulations 2008*. *London*: *The Stationery Office*, *2008*.

[12] CONSTRUCTION INDUSTRY COUNCIL. *Essential principles for built environment professionals – Creating an accessible and inclusive environment*. *London*: *CIC*, *2017*.[4]

[13] COMMISSION FOR ARCHITECTURE AND THE BUILT ENVIRONMENT. *The principles of inclusive design – They include you*. *London*: *CABE*, *2006*.[5]

[14] VOCALEYES. *Museum access information guidelines 2016*. *London*: *VocalEyes*, *2016*.[6]

[15] DEPARTMENT OF THE ENVIRONMENT, TRANSPORT AND THE REGIONS. *Inclusive mobility – A guide to best practice on access to pedestrian and transport infrastructure*. *London*: *DTLR Mobility and Inclusion Unit*, *2002*.

[16] HIGHWAYS ENGLAND. *Cycle traffic and the strategic road network. Interim Advice Note 195/16*. *London*: *Highways England*, *2016*.

[17] TRANSPORT FOR LONDON. *London cycling design standards*. *London*: *TfL*, *2014*.[7]

[18] DEPARTMENT FOR TRANSPORT and TRANSPORT SCOTLAND. *Design standards for accessible railway stations*. *Crown copyright*, *2015*.

[19] SPORT ENGLAND. *Accessible sports facilities*. *London*: *Sport England Publications*, *2010*.[8]

[20] HEALTH AND SAFETY EXECUTIVE. *Managing crowds safely – A guide for organisers at events and venues*. HSG154. *Bootle, Merseyside*: *HSE*, *2014*.

[21] ROWE, I. and ANCLIFFE, S. *Guidance on designing for crowds – An integrated approach*. C675. *London*: *CIRIA*, *2008*.

[22] BARKER, P. and FRASER, J. *Sign design guide – A guide to inclusive signage*. *London*: *JMU Access Partnership* and *The Sign Design Society*, *2000*. ISBN 185878 412 3.

[23] ROYS, M. and WRIGHT, M. Accidents on English dwelling stairs are directly related to going size. In: *Contemporary ergonomics*, 2008, 632–637.

[24] ROYS, M. and WRIGHT, M. *Proprietary nosings for non-domestic stairs. BRE IP 15/03*. *Watford*: *Building Research Establishment*, *2003*.

[25] GUIDE DOGS FOR THE BLIND ASSOCIATION. *Guidance on the provision of spending facilities for guide dogs and other assistance dogs*. *Reading*: *Guide Dogs For The Blind Association*, *2015*.[9]

4 Available at http://cic.org.uk/projects/project.php?s=essential-principles-guide.
5 Available at http://webarchive.nationalarchives.gov.uk/20110118111334/http://www.cabe.org.uk/files/the-principles-of-inclusive-design.pdf.
6 Available at http://vocaleyes.co.uk/wp-content/uploads/2016/12/Museum-access-information-guidelines-2016-VocalEyes.pdf.
7 Chapter 8 available at http://content.tfl.gov.uk/lcds-chapter8-cycleparking.pdf.
8 Sport England Publications, 21 Bloomsbury Street, London, WC1B3HF. www.sportengland.org.
9 Guide Dogs for the Blind Association, Burghfield Common, Reading, RG7 3YG. Telephone 0118 983 5555. Email guidedogs@guidedogs.org.uk

Licensed copy: Aston University OpenAthens , Aston University, Version correct as of 25/03/2020

[26] INTERNATIONAL COMMISSION ON ILLUMINATION. *Guide on the limitation of the effects of obtrusive light from outdoor lighting installations*. CIE 150:2003 *Vienna*: *CIE*, *2003*.

[27] SECURED BY DESIGN (SBD). *New homes*. *London*: *ACPO Secured by Design*, *2014*.

[28] SECURED BY DESIGN (SBD). *Commercial developments*. *London*: *ACPO Secured by Design*, *2015*.

[29] COMMISSION INTERNATIONALE DE L'ECLAIRAGE (CIE). *CIE guide to increasing accessibility in light and lighting*. CIE 196. *Vienna*: *CIE*, *2011*. ISBN 978 3 901906 94 7.

[30] SOCIETY OF LIGHT AND LIGHTING (SLL). *Lighting guide 6: The exterior environment*. LG06/16. *London*: *CIBSE*, *2016*.

[31] TICLEANU, C. *RLRCL Report describing initial literature review on circadian lighting*. BRE Client Report B137170-01. *London/Watford*: *CIBSE/BRE*: *2017*.[10]

[32] SOCIETY OF LIGHT AND LIGHTING (SLL). *The SLL code for lighting*. *London*: *CIBSE*, *2012*.

[33] FIELDFARE TRUST. *A good practice guide to disabled people's access to the countryside – Least restrictive access guidelines*. *Cupar, Fife*: *Fieldfare Trust*.[11]

[34] FIELDFARE TRUST. *A good practice guide to disabled people's access to the countryside – Countryside path network guidelines*. *Cupar, Fife*: *Fieldfare Trust*.

[35] HISTORIC ENGLAND. *Easy access to historic landscapes*. *London*: *Historic England*, *2015*.

[36] DEPARTMENT FOR TRANSPORT. *Safety at street works and road works: a code of practice*. *Crown copyright*, *2013*.[12]

[37] GREAT BRITAIN. *Control of Substances Hazardous to Health (COSHH) Regulations*. *London*: *The Stationery Office*, *2002*.

[38] BRIGHT, K.T. and COOK, G.K. *Project Rainbow, a research project to provide colour and contrast design guidance for internal built environments*. Occasional Paper 57. *Ascot*: *The Chartered Institute of Building*, *1999*. ISBN 1 85380 084 8.

[39] BRIGHT, K.T. and COOK, G.K. *The colour, light and contrast manual – Designing and managing inclusive built environments*. *Oxford*: *Wiley-Blackwell*, *2010*. ISBN 978 1 4051 9504 1.

[40] FOOTBALL STADIA IMPROVEMENT FUND AND FOOTBALL LICENSING AUTHORITY. *Accessible stadia – A good practice guide to the design of facilities to meet the needs of disabled spectators and other users*. *London*: *FSIF/FLA*, *2003*.[13]

[41] SPORTS GROUNDS SAFETY AUTHORITY. *Accessible stadia – Supplementary guidance*. *London*: *SGAS*, *2015*.[14]

[42] HEALTH AND SAFETY EXECUTIVE. *Assessing the slip resistance of flooring – HSE technical information sheet*. *Crown Copyright*, *2012*.[15]

[43] CARPENTER, J., LAZARUS, D. and PERKINS, C. *Safer surfaces to walk on – reducing the risk of slipping. C652*. *London*: *CIRIA*, *2006*.[16]

10 Available at http://www.cibse.org/knowledge/knowledge-items/detail?id=a0q0O00000CF7o9QAD.
11 Available at http://www.fieldfare.org.uk/countryside-for-all/countryside-for-all-good-practice-guide/?phpMyAdmin=a83c17410f95a34fc45353e75deec0d6.
12 Available at https://www.gov.uk/government/uploads/system/uploads/attachment_data/file/321056/safety-at-streetworks.pdf.
13 Football Stadia Improvement Fund, 25 Soho Square, London, W1D 4FF. Telephone 0207 534 4210. Football Licensing Authority, 27 Harcourt House, 19 Cavendish Square, London, W1G 0PL. Telephone 0207 491 7191.
14 Available at http://www.safetyatsportsgrounds.org.uk/sites/default/files/publications/accessible-stadia-supplementary-guidance.pdf.
15 Available at http://www.hse.gov.uk/pubns/geis2.pdf.
16 Available from http://www.ciria.org.

 © THE BRITISH STANDARDS INSTITUTION 2018 – ALL RIGHTS RESERVED

[44] CENTRE FOR ACCESSIBLE ENVIRONMENTS. *Specifiers' handbook – Internal floor finishes. CAE and RIBA Publishing, London, 2006.*[17]

Licensed copy: Aston University OpenAthens , Aston University, Version correct as of 25/03/2020

17 Centre for Accessible Environments (CAE), Holyer House, 20–21 Red Lion Court, London EC4A 3EB. Telephone 020 7822 8323. http://cae.org.uk.

Index

The suffix "Comm" indicates that the reference is contained within the Commentary section of the specified clause or subclause.

"A" board signs, 8.1 Comm, A.1.7

access, definition, 3.1

access routes, 8.1

cleaning, A.2.2

design, Fig. 8

deterrent paving, 8.4.3

dimensions, 8.1.2

fall protection, 8.2.2.3

gates, barriers and restrictions, 8.5

gradients, 8.1.4

hazards and hazard protection, 8.2, 8.2.2, Fig. 9, Fig. 10

horizontal movement, Clause 8

maintenance, A.3.3

management, A.1.2

passing places, 8.1.2 Note 1, 8.1.3, Annex E

projections into, 8.2.2.1, 10.6, Fig. 9, Fig. 10

resting places, 8.1.1, 8.1.4

street furniture, 8.1 Comm, 8.2.1

surfaces, 8.1 Comm, 8.4

tactile paving, 8.4.2

temporary external events, D.6

temporary works, A.1.3

vertical movement, Clause 9

access strategy, 4.3

accessible, definition, 3.2

accessible routes,

definition, 3.3

provision, 8.1.1

see also access routes

adapted cycles, 7.1

amphitheatre-style seating, 9.1.2, 10.7

angling locations, 12.4

arriving at destination, Clause 6

artificial lighting, 11.1, 11.3, 11.8, Table 5

assistance dog toilets/spending areas, 10.11, A.1.7

assistive listening systems, 8.3.2, 10.1.7

temporary external events, D.1

audible communication systems *see* assistive listening systems

balustrades,

fixings, 9.3.4

provision and design, 9.3.1

see also handrails

beaches, 12.2

bird-watching/nature hides, 12.1

blister pedestrian crossing surface, 3.4, 7.3, Fig. 2, Fig. 3

Blue Badge holders, provisions for, Clause 7 Comm, A.1.5, D.4

bridges, 9.5

building positioning, 5.1

bus shelters, 6.2.4

bus stops, 6.2.2

cable covers, temporary events, D.6.3

cane detection provisions, Fig. 10

cycle stands, 7.1

fencing and guardrails, 8.5.3

hazard detection, 8.1.1, 8.2.2.1

refreshment areas, 10.5

tapping rail as trip hazard, 8.2.2.2 Note

waste bins, 8.2.1.6

car parking, Clause 6 Comm

barrier control systems, 7.11.4

Blue Badge holders, provisions for, Clause 7 Comm, A.1.5, D.4

 © THE BRITISH STANDARDS INSTITUTION 2018 – ALL RIGHTS RESERVED

Licensed copy: Aston University OpenAthens , Aston University, Version correct as of 25/03/2020

crematoria, 7.4.5
electric vehicle charging points, Clause 7 Comm, 7.9
enlarged standard spaces, 7.4.1, 7.4.3, 7.4.4
entrances, 7.11
height restrictions, 7.11.5
information provision, 7.11.3
management, A.1.5
mobility services, 7.10
multi-storey car parks, 7.7, 7.11.1
parent/guardian and child spaces, Clause 7 Comm, 7.4.1
pay-and-display systems, 7.12.1
public assemblies, 10.1.3
religious buildings, 7.4.5
short term waiting areas, 6.1
signs and signage, 7.7, 7.11.2, 7.11.5, Fig. 5
space allowances, 7.8, Fig. 6, Annex C
temporary external events, D.4
ticket dispensers, 7.12.1, 7.12.2, Fig. 7
transport car parks, 7.4.4
visitor attractions, 10.2
see also designated accessible parking spaces

cattle grids, 8.5.2, 12.1
Changing Places toilets, A.1.8, A.1.10, D.10
cleaning, A.2
communication systems *see* emergency communication systems
conventional passenger lifts,
definition, 3.9.1
external environment and, 9.4 Comm
multi-storey car parks, 7.7
see also lifting appliances
corduroy hazard warning surface, 3.5, 9.1.6, Fig. 11
counters,
payment counters, 10.1.6, 11.7
temporary external events, D.1
crematoria, parking, 7.4.5
cycle parking, Clause 6 Comm, 7.1
cycle stands, 8.2.1.3

deliveries, A.1.12
design and access statements, 4.2
designated accessible parking spaces,
access, 7.5, 7.11.1
crematoria, 7.4.5
enclosed, 7.8, Fig. 6
hotels, 7.4.3
management, A.1.5
multi-occupancy residential buildings, 7.4.7
multi-storey car parks, 7.7, 7.11.1
off-street, 7.4
access, 7.5
design and layout, 7.6, Fig. 4
location, 7.5
markings, 7.6, Fig. 5
provision, 7.4.1
on-street, 7.3, Fig. 3
provision, 7.2, Table 2, A.1.5
public assemblies, 10.1.3
religious buildings, 7.4.5
shopping, recreation and leisure facilities, 7.4.3
signs and signage, 7.7, 7.11.2, 7.11.5, Fig. 5
sports facilities, 7.4.6
temporary external events, D.4
transport car parks, 7.4.4
use, 7.4.1 Note 3, A.1.5
workplaces, 7.4.2
see also car parking
desire line, definition, 3.6
deterrent paving, 8.4.3
directional signs, 8.3.1
drainage channels/gratings, 8.2.1.5, A.2.2
dropped kerbs, 6.1, 7.3, Fig. 2, Fig. 3, A.1.3

Licensed copy: Aston University OpenAthens , Aston University, Version correct as of 25/03/2020

electric mobility scooters,
accessible seating, 10.5, D.8.3
provisions in car parks, 7.10
space allowances, Annex C
electric vehicle charging, Clause 7 Comm, 7.9
electrical equipment,
management, A.1.6
see also lifting appliances; lighting
emergency assembly points, 10.1 Comm
emergency communication systems,
car parks, 7.11.4
maintenance, A.3.6
management, A.1.10
subways and bridges, 9.5
emergency egress points, 8.1.1
escalators, 9.4
cleaning, A.2.4
communication systems, A.1.10, A.3.6
maintenance, A.3.5
management, A.1.6
external surfaces,
cleaning, A.2.2
maintenance, A.3.3
slip resistance, F.3
see also surface finishes and materials

falling, protection from, 8.2.2.3
fencing, 8.5.3
fishing and angling locations, 12.4
fixed information and payment counters, 10.1.6, 11.7
floors and flooring, slip resistance, Annex F
free-standing posts and columns, 8.2.1.2

garages, Clause 6 Comm, 7.8, Fig. 6
gates, 8.5.1, Clause 12 Comm, 12.1
guardrails, 8.5.3

handrails, 9.3
definition, 3.13.3
design, 9.3.2, Fig. 11
dimensions and spacings, 9.3.3
fixings, 9.3.4
materials, 9.3.5
nature trails, 12.1
provision, 9.3.1
structural guarding, 9.1.4
width between, 9.1.4
historic landscapes and monuments, 7.11.1 Note, 12.5
hoists, vehicle access, 6.1 Comm, 7.4.1, 7.6 Note, 7.8
horizontal movement, Clause 8
hotels, parking, 7.4.3

illuminance,
definition, 3.7
see also lighting
inclusive design,
definition, 3.8
historic landscapes and monuments, 12.5
principles, Clause 4 Comm
strategy, 4.1, 12.5, Table 1
inclusive environments, Clause 4 Comm
induction loops *see* assistive listening systems
information points, 10.1
fixed information and payment counters, 10.1.6, 11.7
lighting, 10.1.4, 11.7
nature trails, 12.1
provision, 10.1.1
signs and signage, 10.1.2
telephones, 10.1.5
information provision, 8.3
audible, 8.3.2
car parking, 7.11.3
location, 8.3.2
public transport, 6.2.1, 6.2.4

 © THE BRITISH STANDARDS INSTITUTION 2018 – ALL RIGHTS RESERVED

Licensed copy: Aston University OpenAthens , Aston University, Version correct as of 25/03/2020

temporary external events, D.2
websites, A.1.1, D.2
see also signs and signage
internet booths, 10.6

kerb heights, 6.1 Note 2, 6.2.2

landings,
access routes, 8.1.4
definition, 3.13.4
handrails, 9.3.1
ramps, 9.2 Comm, 9.2.4
steps and stairs, 9.1.3 Note 1, 9.1.6
subways and bridges, 9.5
surface material, 9.1.5 Note 5, 9.2.6
landscaping *see* trees, planting and soft landscaping
legibility of space, 5.2.2
lifting appliances, 9.4
cleaning, A.2.4
communication systems, A.1.10, A.3.6
conventional passenger lifts, 3.9.1, 7.7, 9.4 Comm
definitions, 3.9
external environment considerations, 9.4
maintenance, A.3.5
management, A.1.6
multi-storey car parks, 7.7
slow speed lifts, 3.9.2, 9.4 Comm
lifts *see* conventional passenger lifts; lifting appliances; slow speed lifts
light reflectance value (LRV),
artificial light and, 11.3 Comm
definition, 3.10
measuring, B.2
visual contrast and, B.1, Fig. B.1
lighting, Clause 11
artificial, 11.1, 11.3, 11.8, Table 5
bus/tram stops and shelters, 6.2.4
cleaning, A.2.7
colour rendering, 11.3, 11.8
environmental zones, Clause 11 Comm, Table 4
general principles, 11.1
glare and shadows, 11.2
lip reading and, 11.1 Comm, 11.4
maintenance, A.3.9
meeting and information points, 10.1.4, 11.7
natural/daylight, 11.1
off-street parking spaces, 7.6
ramps, 9.2.7, 11.5
signs and signage, 8.3.2, 11.8
specific applications, Table 5
steps and stairs, 9.1.7, 11.6
subways and bridges, 9.5
way-finding and, 5.2.4, 11.8
lip reading, illumination for, 11.1 Comm, 11.4
low-level walls, 8.2.1.2

maintenance issues, A.3
management issues, A.1
manifestation,
bus/tram shelters, 6.2.4
definition, 3.11
mechanical equipment,
maintenance, A.3.5
management, A.1.6
see also escalators; lifting appliances; moving walks
meeting points, 10.1
lighting, 10.1.4, 11.7
provision, 10.1.1
signs and signage, 10.1.2
telephones, 10.1.5
mobility services, 7.10
moving walks, 9.4
cleaning, A.2.4
communication systems, A.1.10, A.3.6

Licensed copy: Aston University OpenAthens , Aston University, Version correct as of 25/03/2020

maintenance, A.3.5
management, A.1.6
multi-occupancy residential buildings, parking, 7.4.7
multi-storey car parks, 7.7, 7.11.1

natural lighting/daylight, 11.1
nature trails, 12.1
navigation, 5.2

orientation,
definition, 3.12
planning for, 5.2

parent/guardian and child parking spaces, Clause 7 Comm, 7.4.1
parking *see* car parking; cycle parking; designated accessible parking spaces; garages
parking meters, 7.12
parks and gardens, 7.11.1 Note, 12.3
passenger lifts *see* conventional passenger lifts
pay-and-display systems, 7.12.1
payment counters, 10.1.6, 11.7
pedestrian routes *see* access routes
picking-up points, Clause 6 Comm, 6.1
piers, 12.2
planting *see* trees, planting and soft landscaping
play areas, 12.6
posts and columns, free-standing, 8.2.1.2
principle of two senses, 5.2.3
public art, 10.4, 12.3
public facilities,
cleaning, A.2.5
maintenance, A.3.7
management, A.1.7
see also play areas; refreshment areas; toilets
public telecommunications, 10.1.5, 10.6
public toilets *see* Changing Places toilets; toilets
public transport, 6.2
buses, 6.2.2, 6.2.4
car parks, 7.4.4
information provision, 6.2.1, 6.2.4
ticketing facilities, 6.2.1
tram systems, 6.2.3, 6.2.4

raised planters, 10.9
raised stands, D.8
raked seating areas, 9.1.2
ramps, 9.2
beach areas, 12.2
component definitions, 3.13
edge protection, 9.2.5
gradient, 9.2 Comm, 9.2.2, Table 3
handrails, 9.3
hazard protection beneath, 8.2.2.2
landings, 9.2 Comm, 9.2.4
lighting, 9.2.7, 11.5
multi-storey car parks, 7.7
nature trails, 12.1
signs and signage, 9.2.1
slip resistance, 9.2.6, Annex F
subways and bridges, 9.5
surface materials, 9.2.6
vehicle access ramps, 6.1 Comm, 7.4.1, 7.6 Note
width, 9.2.3
refreshment areas, 10.5
religious buildings, parking, 7.4.5
resting places,
access routes, 8.1.1, 8.1.4
subways and bridges, 9.5
temporary external events, D.3
see also seating

sanitary accommodation, 10.10
cleaning, A.2.8

 © THE BRITISH STANDARDS INSTITUTION 2018 – ALL RIGHTS RESERVED

Licensed copy: Aston University OpenAthens , Aston University, Version correct as of 25/03/2020

see also Changing Places toilets; showers; toilets
sculptures *see* public art
seating, 10.7
accessible routes, 7.5 Note 2
amphitheatre-style, 9.1.2, 10.7
beaches and piers, 12.2
bus/tram shelters, 6.2.4
cleaning, A.2.6
maintenance, A.3.8
meeting and information points, 10.1.1
raked, 9.1.2
refreshment areas, 10.5
temporary external events, D.3, D.8
sensory gardens, 12.3 Comm
sensory information, 5.2.3, 5.2.4 Note 3, 8.1 Comm, 10.9 Comm
service outlets/covers, 8.2.1.5, A.3.3
setting-down points, Clause 6 Comm, 6.1, Fig. 1
shelters, bus/tram, 6.2.4
shopping facilities, parking, 7.4.3
showers, beach areas, 12.2
sign language, illumination for, 11.1 Comm
signs and signage, 8.3
"A" board signs, A.1.7
assistive listening systems, 10.1.7
cleaning, 8.3.1 Note 2, A.2.3
lighting, 8.3.2, 11.8
location, 8.3.2, A.1.4
management, A.1.4, A.1.7
meeting and information points, 10.1.2
minimizing, 8.1 Comm
nature trails, 12.1
parking, 7.7, 7.11.2, 7.11.5, Fig. 5
ramps, 9.2.1
temporary, A.1.4
visitor attractions, 10.2
way-finding and, 5.2.4
site planning, 5.1
slip potential characteristics, Annex F
slopes *see* ramps
slow speed lifts,
definition, 3.9.2
external environment and, 9.4 Comm
space allowances,
access route passing places, 8.1.2 Note 1, 8.1.3, Annex E
vehicle access, 7.8, Fig. 6, Annex C
wheelchair manoeuvring, Annex C
sports events, temporary, D.6.1
sports facilities,
parking, 7.4.6
ramps, 9.2.3 Note 2
within parks, 12.3 Comm
steps and stairs, 9.1
beach areas, 12.2
component definitions, 3.13
design, 9.1.2
handrails, 9.3, Fig. 11
hazard protection beneath, 8.2.2.2
identification of step nosing, 9.1.5
landings, 9.1.3 Comm, 9.1.6
lighting, 9.1.7, 11.6
maintenance, A.3.2
rise of flight, 9.1.3
single steps, 9.1.3
slip resistance, 9.1.5, Annex F
subways and bridges, 9.5
surface materials, 9.1.5
tactile paving, 9.1 Comm, 9.1.6, Fig. 11
weather protection, 9.1.1
width, 9.1.4
street furniture, 8.1 Comm, 8.2.1
cleaning, A.2.6
location, 8.2.1.1

Licensed copy: Aston University OpenAthens , Aston University, Version correct as of 25/03/2020

maintenance, A.3.8
management, A.1.2, A.1.9
parks and gardens, 12.3
surface finishes, 8.2.1.2, Clause 11 Comm
visual clutter, 5.2.2 Comm
subways, 9.5
surface finishes and materials,
access routes, 8.1 Comm, 8.4
cleaning, A.2.2
handrails, 9.3.5
lifting appliances, 9.4
lighting and, Clause 11 Comm
maintenance, A.3.3
off-street parking spaces, 7.6
ramps, 9.2.6
seating, 10.7
slip potential characteristics, Annex F
steps and stairs, 9.1.5
street furniture, 8.2.1.2, Clause 11 Comm
temporary external events, D.6.2

tactile paving,
access routes, 8.4.2
definitions, 3.4, 3.5, 3.14
designated on-street parking, 7.3
maintenance, A.3.3
ramps, 9.2.6
specific locations, Clause 12 Note 1
steps and stairs, 9.1 Comm, 9.1.6, Fig. 11
tram platforms, 6.2.3
tapping rails *see* cane detection provisions
telephones, public, 10.1.5, 10.6
temporary external events, 10.3, Annex D
Changing Places toilets, D.10
horizontal movement, D.6
information provision, D.2
parking, D.4
pedestrian queuing, D.5
raised stands, D.8
screening areas, D.5
ticketing policy, D.1
toilets, D.9, D.10
transport, D.3
viewing areas and platforms, D.7, D.8.3
temporary works, A.1.3
ticketing facilities,
car parks, 7.12.1, 7.12.2, Fig. 7
public transport, 6.2.1
temporary external events, D.1
toilets, 10.10
beaches and piers, 12.2
Changing Places toilets, A.1.8, A.1.10, D.10
emergency communication systems, A.1.10
management, A.1.8
nature trails, 12.1
temporary external events, D.9, D.10
tram systems,
platforms, 6.2.3
shelters, 6.2.4
trees, planting and soft landscaping, 10.9
along access routes, 8.1.2 Note 4
maintenance, A.3.4
near parking spaces, 7.6
parks and gardens, 12.3
tree grilles, 8.2.1.7
way-finding and, 5.2.4 Note 3
two senses, principle of, 5.2.3

unisex, definition, 3.15
user feedback, A.1.11
utility cabinets, 8.2.1.4

vertical movement, Clause 9
viewing areas and platforms, D.7, D.8.3

 © THE BRITISH STANDARDS INSTITUTION 2018 – ALL RIGHTS RESERVED

Licensed copy: Aston University OpenAthens , Aston University, Version correct as of 25/03/2020

visitor attractions, 10.2
visitor information *see* information provision
visual clutter, 5.2.2 Comm
visual contrast,
  definition, 3.16
  use, 5.2.2 Note 2

walls, low-level, 8.2.1.2
waste bins, 8.2.1.6, A.1.2
water features, 10.8
  as hazards, 8.2.2.1
  way-finding and, 5.2.4 Note 3
way-finding,
  definition, 3.17
  lighting, 5.2.4, 11.8
  planning and strategy, 5.2.1
  signs and signage, 5.2.4
  spatial, physical and environmental clues, 5.2.4
weather protection,
  bridges, 9.5
  bus/tram shelters, 6.2.4
  information and payment counters, 10.1.6
  lifting appliances, 9.4
  off-street parking, 7.5 Note 4
  public telecommunications, 10.6
  setting-down points, 6.1
  steps and stairs, 9.1.1
wheelchair users,
  accessible seating, 10.5, A.1.2, D.8.3
  space allowances, Annex C
workplaces, parking, 7.4.2

Licensed copy: Aston University OpenAthens , Aston University, Version correct as of 25/03/2020

NO COPYING WITHOUT BSI PERMISSION EXCEPT AS PERMITTED BY COPYRIGHT LAW

British Standards Institution (BSI)

BSI is the national body responsible for preparing British Standards and other standards-related publications, information and services.

BSI is incorporated by Royal Charter. British Standards and other standardization products are published by BSI Standards Limited.

Licensed copy: Aston University OpenAthens , Aston University, Version correct as of 25/03/2020

About us

We bring together business, industry, government, consumers, innovators and others to shape their combined experience and expertise into standards -based solutions.

The knowledge embodied in our standards has been carefully assembled in a dependable format and refined through our open consultation process. Organizations of all sizes and across all sectors choose standards to help them achieve their goals.

Information on standards

We can provide you with the knowledge that your organization needs to succeed. Find out more about British Standards by visiting our website at bsigroup.com/standards or contacting our Customer Services team or Knowledge Centre.

Buying standards

You can buy and download PDF versions of BSI publications, including British and adopted European and international standards, through our website at bsigroup.com/shop, where hard copies can also be purchased.

If you need international and foreign standards from other Standards Development Organizations, hard copies can be ordered from our Customer Services team.

Copyright in BSI publications

All the content in BSI publications, including British Standards, is the property of and copyrighted by BSI or some person or entity that owns copyright in the information used (such as the international standardization bodies) and has formally licensed such information to BSI for commercial publication and use.

Save for the provisions below, you may not transfer, share or disseminate any portion of the standard to any other person. You may not adapt, distribute, commercially exploit, or publicly display the standard or any portion thereof in any manner whatsoever without BSI's prior written consent.

Storing and using standards

Standards purchased in soft copy format:

- A British Standard purchased in soft copy format is licensed to a sole named user for personal or internal company use only.
- The standard may be stored on more than 1 device provided that it is accessible by the sole named user only and that only 1 copy is accessed at any one time.
- A single paper copy may be printed for personal or internal company use only.

Standards purchased in hard copy format:

- A British Standard purchased in hard copy format is for personal or internal company use only.
- It may not be further reproduced – in any format – to create an additional copy. This includes scanning of the document.

If you need more than 1 copy of the document, or if you wish to share the document on an internal network, you can save money by choosing a subscription product (see 'Subscriptions').

Reproducing extracts

For permission to reproduce content from BSI publications contact the BSI Copyright & Licensing team.

Subscriptions

Our range of subscription services are designed to make using standards easier for you. For further information on our subscription products go to bsigroup.com/subscriptions.

With **British Standards Online (BSOL)** you'll have instant access to over 55,000 British and adopted European and international standards from your desktop. It's available 24/7 and is refreshed daily so you'll always be up to date.

You can keep in touch with standards developments and receive substantial discounts on the purchase price of standards, both in single copy and subscription format, by becoming a **BSI Subscribing Member**.

PLUS is an updating service exclusive to BSI Subscribing Members. You will automatically receive the latest hard copy of your standards when they're revised or replaced.

To find out more about becoming a BSI Subscribing Member and the benefits of membership, please visit bsigroup.com/shop.

With a **Multi-User Network Licence (MUNL)** you are able to host standards publications on your intranet. Licences can cover as few or as many users as you wish. With updates supplied as soon as they're available, you can be sure your documentation is current. For further information, email subscriptions@bsigroup.com.

Revisions

Our British Standards and other publications are updated by amendment or revision.

We continually improve the quality of our products and services to benefit your business. If you find an inaccuracy or ambiguity within a British Standard or other BSI publication please inform the Knowledge Centre.

Useful Contacts

Customer Services
Tel: +44 345 086 9001
Email (orders): orders@bsigroup.com
Email (enquiries): cservices@bsigroup.com

Subscriptions
Tel: +44 345 086 9001
Email: subscriptions@bsigroup.com

Knowledge Centre
Tel: +44 20 8996 7004
Email: knowledgecentre@bsigroup.com

Copyright & Licensing
Tel: +44 20 8996 7070
Email: copyright@bsigroup.com

BSI Group Headquarters

389 Chiswick High Road London W4 4AL UK

bsi.