RubinAlerts: A Multi-Broker Pipeline for Type Ia Supernova Discovery and Spectroscopic Follow-Up Planning in Rubin Observatory Deep Drilling Fields

C. Stubbs

February 2026

Abstract

We describe RubinAlerts, a pipeline for discovering, aggregating, and prioritizing Type Ia supernova (SN Ia) candidates in the Rubin Observatory Legacy Survey of Space and Time (LSST) Deep Drilling Fields (DDFs). The system queries three independent alert brokers—ANTARES, ALeRCE (ZTF), and ALeRCE-LSST—cross-matches their detections, deduplicates sources, screens against known variable star catalogs, and produces a ranked list of SN Ia candidates. Light curve peak fitting using inverted-parabola models in flux space provides estimated times of peak brightness and peak apparent magnitudes. A two-dimensional merit function combining temporal proximity to peak and apparent brightness enables automated generation of prioritized spectroscopic follow-up target lists for the Magellan telescopes at Las Campanas Observatory. This document describes the pipeline architecture, algorithms, data structures, and current implementation status.

Contents

1 Introduction **3**
1.1 Deep Drilling Fields . . . 3

2 Pipeline Architecture **3**
2.1 Code Organization . . . 3

3 Data Sources **5**
3.1 ANTARES . . . 5
3.2 ALeRCE (ZTF) . . . 5
3.3 ALeRCE-LSST . . . 5

4 Alert Aggregation **6**
4.1 Cross-Matching and Deduplication . . . 6
4.2 Probability Normalization . . . 6
4.3 Agreement Scoring . . . 6
4.4 Variable Star Screening . . . 6

5 Rubin Difference-Imaging Photometry **7**
5.1 Flux Representation . . . 7
5.2 Magnitude Conversion . . . 7
5.3 Forced Photometry . . . 7

6 Light Curve Peak Fitting **7**
6.1 Inverted Parabola Model . . . 8
6.2 Goodness of Fit . . . 8
6.3 Fit Status Flags . . . 8
6.4 Band Priority . . . 8
6.5 Optional: SALT2 Template Fitting . . . 9

7 Merit Function for Spectroscopic Follow-Up **9**
7.1 Time Weight . . . 9
7.2 Magnitude Weight . . . 10
7.3 Combined Merit Surface . . . 10

8 Magellan Observing Plan Generation **10**
8.1 Observability Constraints . . . 10
8.2 Target Prioritization . . . 11
8.3 Catalog Format . . . 11

9 Data Schema **11**
9.1 Existing Tables . . . 11
9.2 New Table: `peak_fit_targets` . . . 11

10 Current Status and Future Work **12**
10.1 Implemented . . . 12
10.2 In Progress . . . 13
10.3 Planned . . . 13
10.4 Known Limitations . . . 13

1 Introduction

Type Ia supernovae (SNe Ia) serve as standardizable candles for measuring cosmological distances. The Vera C. Rubin Observatory's LSST will discover thousands of SNe Ia in its Deep Drilling Fields, observed with a cadence of ∼3–5 days in multiple optical bands (*ugrizy*). However, photometric discovery alone is insufficient for precision cosmology: spectroscopic classification and redshift measurement are essential, and telescope time on facilities such as the Magellan 6.5 m telescopes is limited.

The challenge is therefore one of *triage*: given hundreds of photometric SN candidates discovered each night, which ones should receive scarce spectroscopic follow-up resources? The answer depends on (1) the probability that the candidate is a genuine SN Ia rather than a contaminant, (2) its brightness relative to the spectroscopic sensitivity limit, and (3) its temporal phase relative to maximum light—spectra obtained near peak are most valuable for classification and cosmological standardization.

RubinAlerts addresses this by aggregating classifications from multiple alert brokers, fitting light curves to estimate peak brightness and timing, and computing a merit function that encodes the scientific value of observing each candidate on a given night. The output is a prioritized, observatory-ready target list in the native Magellan catalog format.

1.1 Deep Drilling Fields

The pipeline targets the seven fields listed in Table 1, comprising the six Rubin LSST DDFs plus the M49 (NGC 4472) field in the Virgo Cluster. Each field is searched within a 1.75 radius, matching the LSST field of view (∼3.5 diameter).

Table 1: Target fields and their properties. The "ZTF" column indicates whether the field falls within the Zwicky Transient Facility footprint (Dec $\gtrsim -30$).

Field	RA (deg)	Dec (deg)	Search radius	ZTF coverage
COSMOS	150.11	+2.23	1.75	Yes
XMM-LSS	35.57	−4.82	1.75	Yes
ECDFS	52.98	−28.12	1.75	Marginal
ELAIS-S1	9.45	−44.02	1.75	No
EDFS_a	58.90	−49.32	1.75	No
EDFS_b	63.60	−47.60	1.75	No
M49	187.44	+8.00	1.75	Yes

2 Pipeline Architecture

Figure 1 shows the end-to-end data flow. The pipeline is implemented in Python and orchestrated through a Jupyter notebook (`supernova_monitor.ipynb`), with reusable logic organized into modules under the `core/`, `broker_clients/`, `cache/`, `host_galaxy/`, and `utils/` directories.

2.1 Code Organization

The codebase is organized as follows:

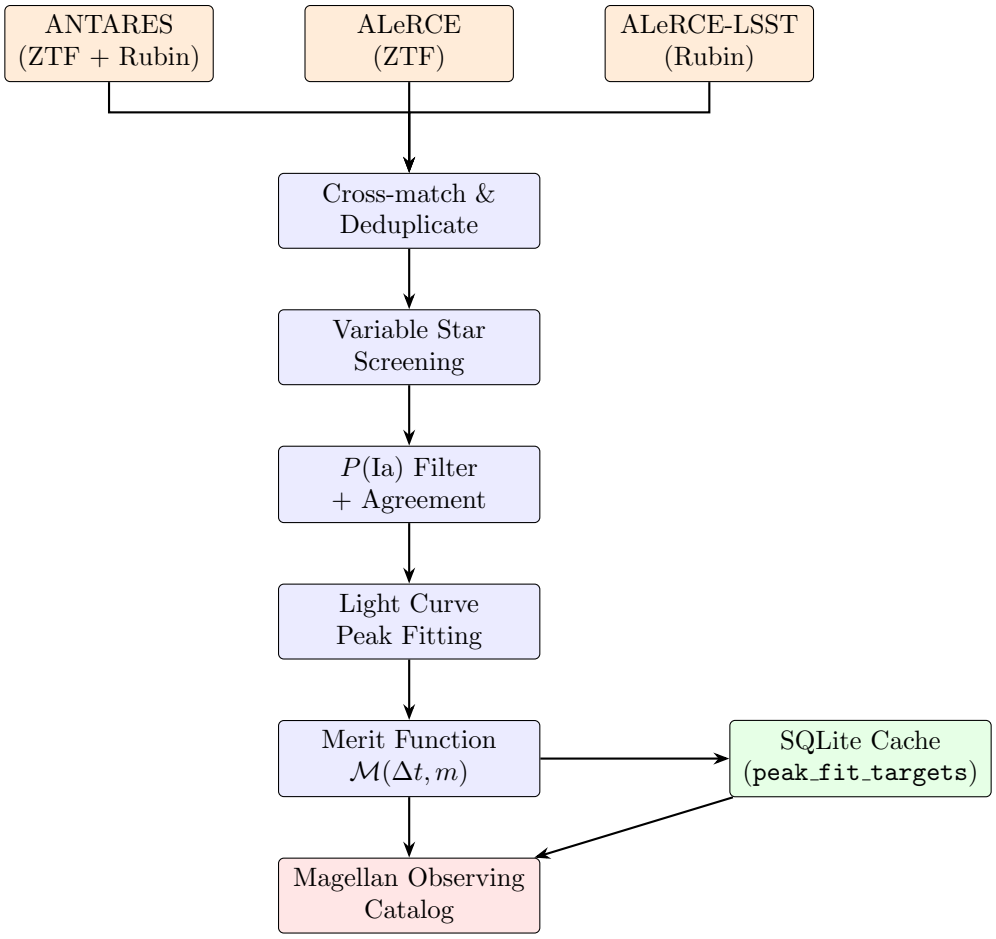

Figure 1: Pipeline data flow. Three alert brokers feed into a cross-matching and deduplication stage, followed by variable star screening, classification filtering, light curve peak fitting, and merit scoring. Results are cached in SQLite for consumption by the Magellan planning notebook.

Module	Purpose
`supernova_monitor.py`	Main orchestrator class
`broker_clients/antares_client.py`	ANTARES broker interface
`broker_clients/alerce_client.py`	ALeRCE interface (ZTF & LSST modes)
`broker_clients/atlas_client.py`	ATLAS forced photometry
`core/alert_aggregator.py`	Cross-match, deduplicate, merge
`core/variable_screen.py`	Known variable star screening
`core/ddf_fields.py`	DDF field definitions
`core/peak_fitting.py`	Light curve peak fitting
`core/magellan_planning.py`	Magellan target planning (planned)
`cache/alert_cache.py`	SQLite caching layer
`host_galaxy/morphology_filter.py`	Galaxy morphology filtering
`utils/plotting.py`	Light curve visualization
`utils/coordinates.py`	Coordinate utilities

3 Data Sources

The pipeline queries three independent alert brokers, each providing different coverage, classifiers, and data products.

3.1 ANTARES

ANTARES[1] ingests both ZTF and (limited) Rubin alert streams. The pipeline performs cone searches of each DDF field (1.75 radius) and filters for loci with supernova-related tags (`superphot_plus_classifie` `SN_candies`, `high_amplitude_transient_candidate`).

ANTARES does not provide a trained SN Ia classifier. Instead, the pipeline computes a heuristic proxy $P(\mathrm{Ia})$ based on the star/galaxy score (`ztf_sgscore1`) and light curve duration. This proxy is **capped at 0.50** to prevent ANTARES-only detections from dominating the ranking:

$$P(\mathrm{Ia})_{\mathrm{ANTARES}} = \min(0.50,\ f(\texttt{sgscore}, \texttt{duration}))\,. \tag{1}$$

3.2 ALeRCE (ZTF)

ALeRCE[2] processes ZTF alerts through a random-forest stamp classifier (`lc_classifier_BHRF_forced_phot`, version 2.1.0) trained on labeled ZTF data. It outputs per-object probabilities for SN Ia, SN II, SN Ib/c, and SLSN classes. Coverage is limited to the ZTF footprint (Dec $\gtrsim -30$), so the three southern DDFs (ELAIS-S1, EDFS_a, EDFS_b) are not covered.

3.3 ALeRCE-LSST

ALeRCE also processes Rubin/LSST alerts through a separate stamp classifier (`stamp_classifier_rubin`) that classifies objects into five categories: SN, AGN, variable star, asteroid, and bogus. Crucially, this classifier **does not sub-classify SN types**: a high $P(\mathrm{SN})$ indicates a likely supernova but does not distinguish Type Ia from Type II or Ib/c.

Known limitation. The ALeRCE LSST API does not correctly handle cone-search queries (returns empty results). The pipeline works around this by querying globally for all SN-classified objects and filtering locally by DDF coordinates using `astropy`.

ALeRCE-LSST provides the richest Rubin photometry: multi-epoch *ugrizy* light curves with both alert-triggered detections and forced photometry at the object position.

Table 2: Summary of alert broker properties.

Broker	Survey	Dec limit	Classifier	$P(\mathrm{Ia})$ range
ANTARES	ZTF + Rubin	$\gtrsim -30$ (ZTF)	Heuristic proxy	0.05–0.50
ALeRCE (ZTF)	ZTF	$\gtrsim -30$	RF stamp classifier	0.0–1.0
ALeRCE-LSST	Rubin	All-sky	Rubin stamp classifier	0.0–1.0

[1] https://antares.noirlab.edu/
[2] https://alerce.online/

4 Alert Aggregation

The `AlertAggregator` class (`core/alert_aggregator.py`) merges detections from all three brokers into a single, deduplicated candidate list.

4.1 Cross-Matching and Deduplication

Objects from different brokers are matched using two criteria:

1. **Coordinate proximity:** Two detections are considered the same astrophysical source if their angular separation is ≤ 1 (converted to degrees: $1/3600 \approx 0.000278$).
2. **Shared identifiers:** Objects sharing a ZTF `object_id` across brokers are merged regardless of coordinate offset.

For each unique source, the pipeline creates a merged record retaining broker-specific identifiers (`object_id_ANTARES`, `object_id_ALeRCE`, `object_id_ALeRCE-LSST`), classification probabilities, and quality diagnostics.

4.2 Probability Normalization

Each broker's classification probability is normalized to a common $P(\text{Ia})$ scale:

- **ALeRCE (ZTF):** Direct ML probability used as-is.
- **ALeRCE-LSST:** $P(\text{SN})$ used as a proxy for $P(\text{Ia})$, acknowledging the lack of subtype discrimination.
- **ANTARES:** Heuristic proxy capped at 0.50 (see §3).

4.3 Agreement Scoring

For objects detected by multiple brokers, the pipeline computes aggregate statistics across all available $P(\text{Ia})$ values:

$$\bar{P} = \frac{1}{N} \sum_{i=1}^{N} P_i(\text{Ia}), \tag{2}$$

$$\sigma_P = \text{std}(P_1, \ldots, P_N). \tag{3}$$

An agreement score is assigned based on σ_P:

$$\text{Agreement} = \begin{cases} 1.0 & \text{if } \sigma_P < 0.1 \quad \text{(high)}, \\ 0.5 & \text{if } 0.1 \leq \sigma_P < 0.25 \quad \text{(moderate)}, \\ 0.0 & \text{if } \sigma_P \geq 0.25 \quad \text{(low)}. \end{cases} \tag{4}$$

4.4 Variable Star Screening

The `VariableScreener` class cross-matches candidates against catalogs of 13,749 known variable stars compiled from Gaia DR3 and the AAVSO Variable Star Index (VSX), distributed across the six Rubin DDFs. The matching radius is 2. Matched candidates are flagged with `known_variable = True` and excluded from the SN Ia candidate list.

5 Rubin Difference-Imaging Photometry

ALeRCE-LSST photometry is derived from Rubin *difference imaging*: each science image is subtracted from a co-added reference template, and point-spread function (PSF) photometry is performed on the residual.

5.1 Flux Representation

The difference-image flux (`psfFlux`) is reported in **nanoJanskys** (nJy) and represents the flux difference $f_{\text{sci}} - f_{\text{tmpl}}$:

- $f > 0$: source is brighter than template (transient brightening).
- $f < 0$: source is fainter than template (fading below baseline).
- $f = 0$: source matches the template exactly.

The science-image flux (`scienceFlux`) is also available for alert-triggered detections (but not for forced photometry) and is always positive for real sources.

5.2 Magnitude Conversion

For positive flux values, the AB magnitude is:

$$m = -2.5 \log_{10}(f_{\text{nJy}}) + 31.4, \tag{5}$$

with uncertainty propagated as:

$$\sigma_m = \frac{2.5}{\ln 10} \cdot \frac{\sigma_f}{f}. \tag{6}$$

Negative flux limitation. Points with $f \leq 0$ cannot be converted to magnitudes and are dropped in magnitude-space representations. This truncates the light curve tail, which is why all fitting in this pipeline is performed in flux space.

5.3 Forced Photometry

Forced photometry provides flux measurements at the object position even when the source is not detected above threshold, giving more complete temporal coverage than alert-triggered detections alone. However, forced photometry only provides `psfFlux` (difference flux); the `scienceFlux` is not available.

6 Light Curve Peak Fitting

The `core/peak_fitting.py` module estimates the time of peak brightness and peak apparent magnitude for each candidate. Two methods are available.

6.1 Inverted Parabola Model

Near maximum light, the flux light curve of a SN Ia is approximately parabolic. We fit an inverted parabola in flux space:

$$f(t) = f_{\text{peak}} - a\,(t - t_0)^2, \tag{7}$$

where f_{peak} is the peak flux (nJy), t_0 is the time of peak (MJD), and $a > 0$ is the curvature parameter.

The fit is performed independently per band using `scipy.optimize.curve_fit` with the flux uncertainties as weights (absolute sigma). Initial guesses are derived from the data: $f_{\text{peak}}^{(0)} = \max(f)$, $t_0^{(0)} = t(\max f)$, $a^{(0)} = 1.0$.

Working in flux space. Fitting in flux space rather than magnitude space has three advantages: (1) negative difference-imaging flux values are handled naturally; (2) the parabola is a more physical model near peak in linear flux than in logarithmic magnitudes; (3) there are no singularities from the $\log_{10}$ transform.

6.2 Goodness of Fit

The reduced chi-squared is:

$$\chi^2_\nu = \frac{1}{\nu} \sum_{i=1}^{N} \left(\frac{f_i - f(t_i)}{\sigma_{f,i}} \right)^2, \tag{8}$$

where $\nu = \max(N - 3, 1)$ is the number of degrees of freedom (three free parameters: f_{peak}, t_0, a).

6.3 Fit Status Flags

Each per-band fit is assigned a status flag:

Status	Criterion
`ok`	$N \geq 4$ and $\chi^2_\nu \leq 10$
`underdetermined`	$N = 3$ (exactly constrained)
`poor_fit`	$N \geq 4$ and $\chi^2_\nu > 10$
`insufficient_data`	$N < 3$
`fit_failed`	Optimizer did not converge

6.4 Band Priority

For the "headline" peak estimate reported per candidate, the best band is selected from the priority list:

$$r > g > i > z > y > u. \tag{9}$$

The r-band is prioritized because it is closest to rest-frame B-band for SN Ia at the typical DDF redshift range ($z \sim 0.1$–0.4). The first band with a successful fit (status `ok` or `underdetermined`) is selected.

6.5 Optional: SALT2 Template Fitting

If the `sncosmo` package is installed, a multi-band SALT2 template fit is also available. The SALT2 model parameterizes SN Ia light curves as:

$$f(t, \lambda) = x_0 \left[M_0(t, \lambda) + x_1 \, M_1(t, \lambda)\right] \times \exp[c \, \mathrm{CL}(\lambda)] \, , \tag{10}$$

where x_0 is the amplitude, x_1 is the stretch parameter (light-curve width), c is the color parameter, M_0 and M_1 are the template spectral surfaces, and $\mathrm{CL}(\lambda)$ is the color law. The fit simultaneously uses all LSST bands (g, r, i, z, y, u mapped to `sncosmo` band names `lsstg`, `lsstr`, etc.) and requires ≥ 5 data points across ≥ 2 bands.

The SALT2 fit returns t_0 (time of B-band maximum), x_1 (stretch), c (color), the peak rest-frame B-band magnitude, and the redshift z (which can float or be fixed if a spectroscopic redshift is known).

7 Merit Function for Spectroscopic Follow-Up

Given the fitted peak time t_0 and peak magnitude m, we define a merit function that encodes the scientific value of spectroscopically observing a candidate on a given night:

$$\boxed{\mathcal{M} = W_t(\Delta t) \times W_m(m),} \tag{11}$$

where $\Delta t = t_{\mathrm{now}} - t_0$ is the time since peak (days, positive means post-peak), and m is the estimated peak apparent magnitude.

7.1 Time Weight

The time weight is a Gaussian centered on peak:

$$W_t = \exp\left(-\frac{\Delta t^2}{2\tau^2}\right) , \tag{12}$$

with $\tau = 10$ days by default. This gives:

$\lvert\Delta t\rvert$ (days)	W_t
0	1.000
5	0.882
10	0.607
15	0.325
20	0.135
30	0.011

The Gaussian is symmetric: pre-peak observations (rising light curve) receive the same weight as post-peak. This is appropriate because pre-peak spectra are highly valuable for constraining explosion physics, while post-peak spectra within $\sim$2 weeks are standard for classification.

7.2 Magnitude Weight

The magnitude weight is a Gaussian in apparent magnitude space:

$$W_m = \exp\left(-\frac{(m - m_{\rm opt})^2}{\sigma_m^2}\right), \tag{13}$$

with default parameters:

- $m_{\rm opt} = 20.5$ — the optimal magnitude for Magellan 6.5 m spectroscopy. At this brightness, a SN Ia at $z \sim 0.1$–0.15 yields a classification-quality spectrum in ∼20–40 minutes with LDSS3C or IMACS.
- $\sigma_m = \frac{m_{\rm faint} - m_{\rm bright}}{4} = \frac{23.0-18.0}{4} = 1.25$ mag — chosen so that the weight spans the useful magnitude range (∼18–23 mag) with reasonable falloff.

7.3 Combined Merit Surface

The product $\mathcal{M} = W_t \times W_m$ defines a two-dimensional surface over $(\Delta t, m)$ space. The maximum merit ($\mathcal{M} = 1$) occurs at $\Delta t = 0$, $m = m_{\rm opt}$. Objects far from peak, or too bright (nearby, less cosmologically interesting) or too faint (requiring prohibitively long exposures) are deprioritized.

Candidates with `peak_mjd` = NaN or `peak_mag` = NaN (due to insufficient photometry or fit failure) receive $\mathcal{M}$ = NaN and are placed at the bottom of the target list.

All merit function parameters (τ, $m_{\rm opt}$, $m_{\rm bright}$, $m_{\rm faint}$) are configurable to accommodate different instruments and science goals.

8 Magellan Observing Plan Generation

The final stage of the pipeline generates a target catalog in the native Magellan Telescope Control System (TCS) format for spectroscopic follow-up.

8.1 Observability Constraints

For a specified UT observing date, the pipeline computes target observability from Las Campanas Observatory:

Latitude:	−29.0146
Longitude:	−70.6926
Altitude:	2516 m

Using `astropy.coordinates.AltAz` and `astropy.coordinates.get_sun`, the pipeline:

1. Computes nautical twilight boundaries (Sun altitude < -12).
2. Creates a time grid at 15-minute intervals spanning the dark hours.
3. For each target, computes altitude at each grid point.
4. Retains targets that spend at least a configurable minimum time (default: 1 hour) above the airmass limit (default: airmass < 2.0, corresponding to altitude > 30).

8.2 Target Prioritization

Observable targets are sorted by Right Ascension (ascending) for efficient telescope slewing. Within the catalog, comment lines encode the merit score, peak magnitude, time from peak, DDF field, and fit status for each target, enabling the observer to make informed decisions about which targets to prioritize during the night.

8.3 Catalog Format

The Magellan TCS requires a 16-field whitespace-separated format:

Field	Name	Description
1	Reference number	Sequential integer
2	Object name	Alphanumeric + `+-._` only
3	RA	`hh:mm:ss.s` (J2000)
4	Dec	±`dd:mm:ss` (J2000)
5	Equinox	`2000.0`
6	PM_α	0.000 (no proper motion)
7	PM_δ	0.000
8	Rotator angle	Instrument-dependent (degrees)
9	Rotator mode	`GRV`, `EQU`, `HRZ`, or `OFF`
10–12	Guide probe 1	RA, Dec, equinox (zeros if unused)
13–15	Guide probe 2	RA, Dec, equinox (zeros if unused)
16	Epoch	0.000 (no proper motion)

Instrument presets (LDSS3C, IMACS, MagE, FIRE) provide default rotator angles and modes. Guide probe fields are set to zero (no preselected guide stars).

9 Data Schema

The pipeline uses a SQLite database (`cache/data/alerts_cache.db`) for caching intermediate results and bridging between the discovery notebook and the Magellan planning notebook.

9.1 Existing Tables

`alerts` Caches raw broker query results. Columns: `object_id` (TEXT), `broker` (TEXT), `ra` (REAL), `dec` (REAL), `discovery_date` (TEXT), `classification` (JSON), `metadata` (JSON), `cached_at` (TIMESTAMP). Unique on `(object_id, broker)`.

`galaxy_info` Caches galaxy morphology and photometry from catalog queries. Columns: `ra`, `dec`, `morphology`, `catalog` (JSON), `redshift`, `magnitude_g/r/i/z`. Unique on `(ra, dec)`.

`merged_alerts` Caches deduplicated/merged alerts. Columns: `unique_id`, `ra`, `dec`, `brokers_detected`, per-broker classification JSON, `last_updated`.

9.2 New Table: `peak_fit_targets`

This table serves as the intermediate data product between the main pipeline and the Magellan planning notebook:

Column	Type	Description
`object_id`	TEXT	Primary identifier
`object_id_alerce_lsst`	TEXT	ALeRCE-LSST ID
`object_id_antares`	TEXT	ANTARES ID
`ddf_field`	TEXT	DDF field name
`ra`, `dec`	REAL	J2000 coordinates (deg)
`mean_ia_prob`	REAL	Mean $P(\mathrm{Ia})$
`brokers_detected`	TEXT	Broker names
`peak_mjd`	REAL	Fitted peak time (MJD)
`peak_mag`	REAL	Fitted peak magnitude (AB)
`peak_mag_err`	REAL	Magnitude uncertainty
`peak_band`	TEXT	Best-fit band
`peak_fit_status`	TEXT	Fit quality flag
`mjd_now`	REAL	MJD when merit computed
`delta_t`	REAL	$t_{\mathrm{now}} - t_0$ (days)
`merit`	REAL	Merit score (0–1)
`cached_at`	TIMESTAMP	Write timestamp

The table uses `INSERT OR REPLACE` keyed on `object_id`, so re-running the main pipeline overwrites stale entries.

10 Current Status and Future Work

10.1 Implemented

- Multi-broker alert ingestion (ANTARES, ALeRCE-ZTF, ALeRCE-LSST) with DDF-targeted queries and local caching.
- Cross-matching and deduplication across brokers (1 coordinate tolerance + shared ZTF ID matching).
- Variable star screening against 13,749 known variables from Gaia DR3 and VSX.
- Classification filtering with configurable $P(\mathrm{Ia})$ threshold, multi-broker agreement scoring, and minimum broker count.
- Optional elliptical host galaxy morphology filtering via cross-match with SDSS and Pan-STARRS galaxy catalogs.
- ATLAS forced photometry enrichment (cyan and orange bands) for independent light curve validation.
- Flux-space and magnitude-space light curve visualization with per-band colors and survey-specific markers.
- LSST alert stamp display (Science/Template/Difference cutouts).
- Interactive human-in-the-loop visual classification tool (SN/variable/bogus labels saved to CSV).
- Inverted-parabola light curve peak fitting in flux space with per-band fits, band-priority selection, and batch processing.

- Optional SALT2 template fitting (gated by `sncosmo` availability).
- CSV export of candidate tables with timestamps.

10.2 In Progress

- SQLite caching of peak-fit targets with merit scores (`peak_fit_targets` table).
- Merit function implementation and integration into the main pipeline notebook.

10.3 Planned

- Magellan observing catalog generation with observability filtering from Las Campanas, RA-ordered target lists, and instrument-specific rotator presets.
- Standalone Magellan planning notebook reading from the SQLite cache.
- Airmass charts and sky-map visualizations for observing night planning.
- Exposure time estimation based on target magnitude and desired signal-to-noise ratio.

10.4 Known Limitations

1. ALeRCE-LSST cone search API is broken; global query with local filtering is used as a workaround.
2. LSST stamp classifier does not sub-classify SN types (P(SN) only, not P(Ia)).
3. ANTARES P(Ia) is a heuristic proxy, not an ML classifier, capped at 0.50.
4. Negative difference-imaging flux is lost in magnitude-space representations; all fitting is performed in flux space.
5. The 1 cross-match tolerance may occasionally merge distinct sources in crowded fields.
6. LSST `scienceFlux` is only available for alert detections, not forced photometry.
7. The inverted-parabola model is only valid near peak; light curves with significant pre-peak rise or post-peak plateau structure (e.g., i-band secondary maximum) may yield `poor_fit` status.