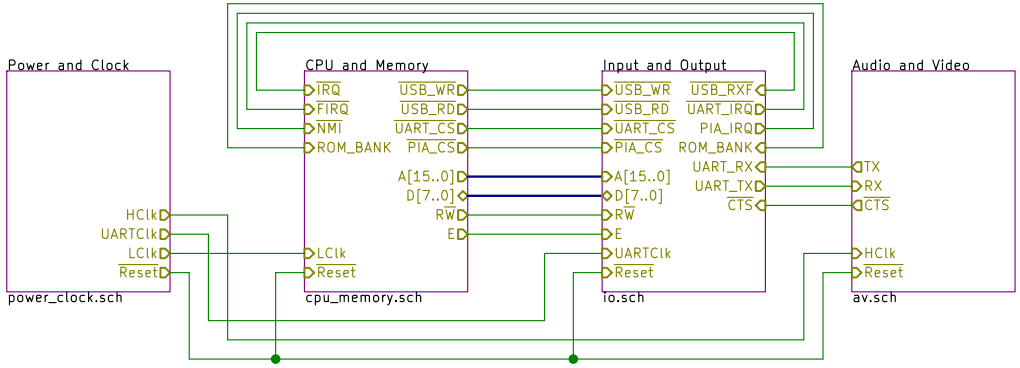

Sheet: /
File: Retro_6809_SBC.sch

Title: Retro 6809 SBC

Size: A4	Date: 2023-01-DD	**Rev: 1.0**
KiCad E.D.A. kicad (5.1.2)-2		Id: 1/5

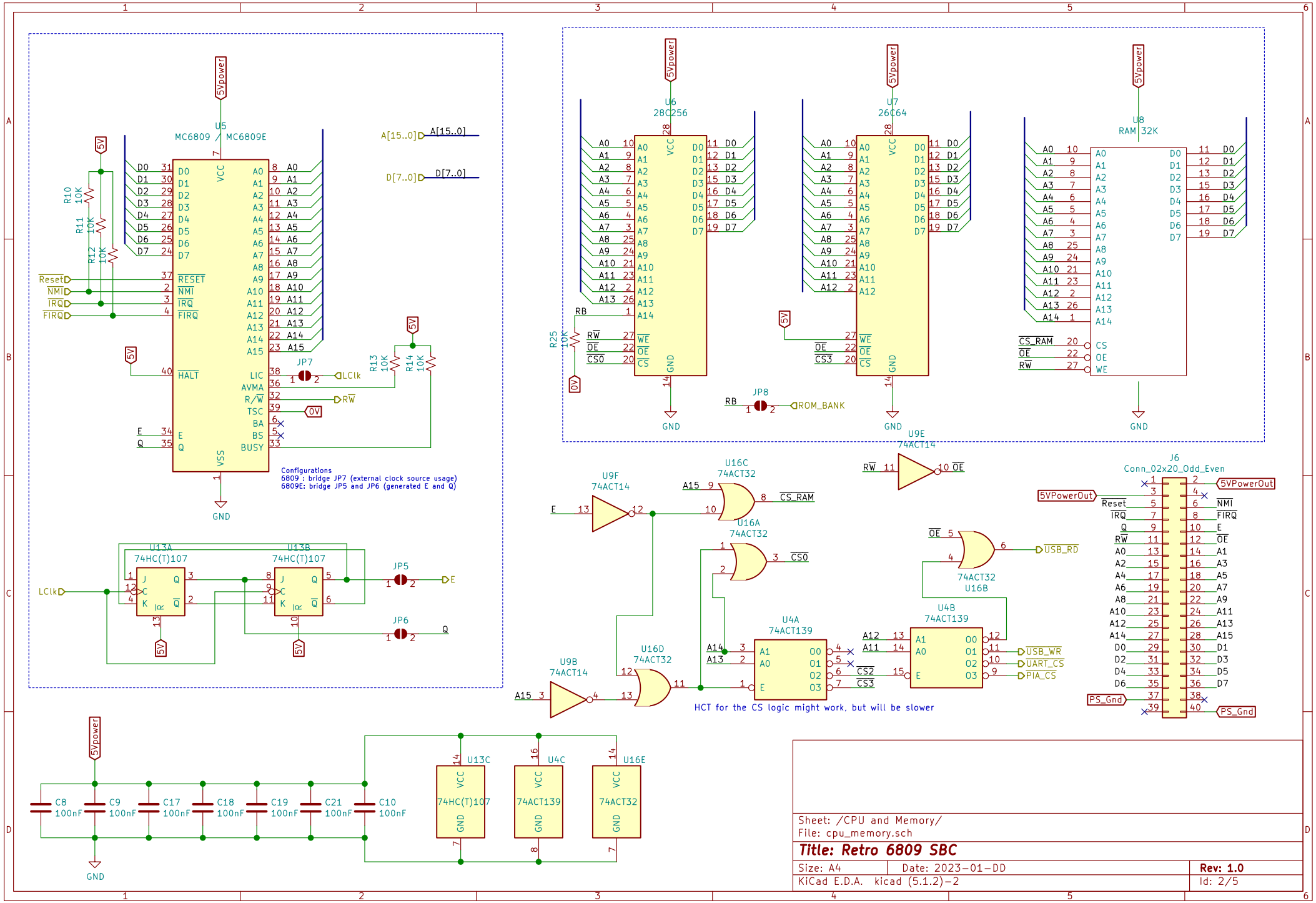

Sheet: /CPU and Memory/
File: cpu_memory.sch

Title: Retro 6809 SBC

Size: A4	Date: 2023-01-DD	Rev: 1.0
KiCad E.D.A. kicad (5.1.2)-2		Id: 2/5

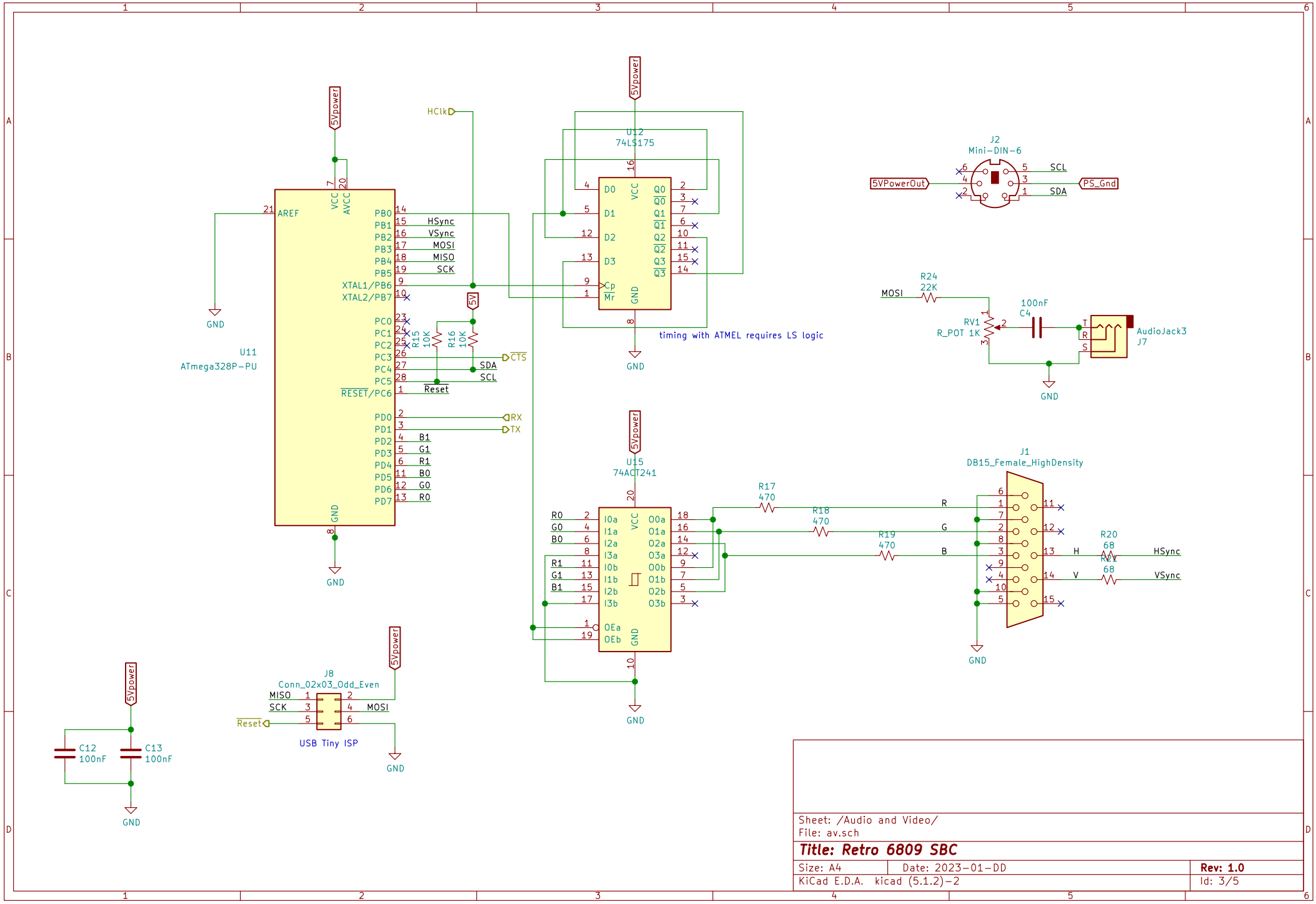

Sheet: /Audio and Video/
File: av.sch

Title: Retro 6809 SBC

Size: A4	Date: 2023-01-DD	Rev: 1.0
KiCad E.D.A. kicad (5.1.2)-2		Id: 3/5

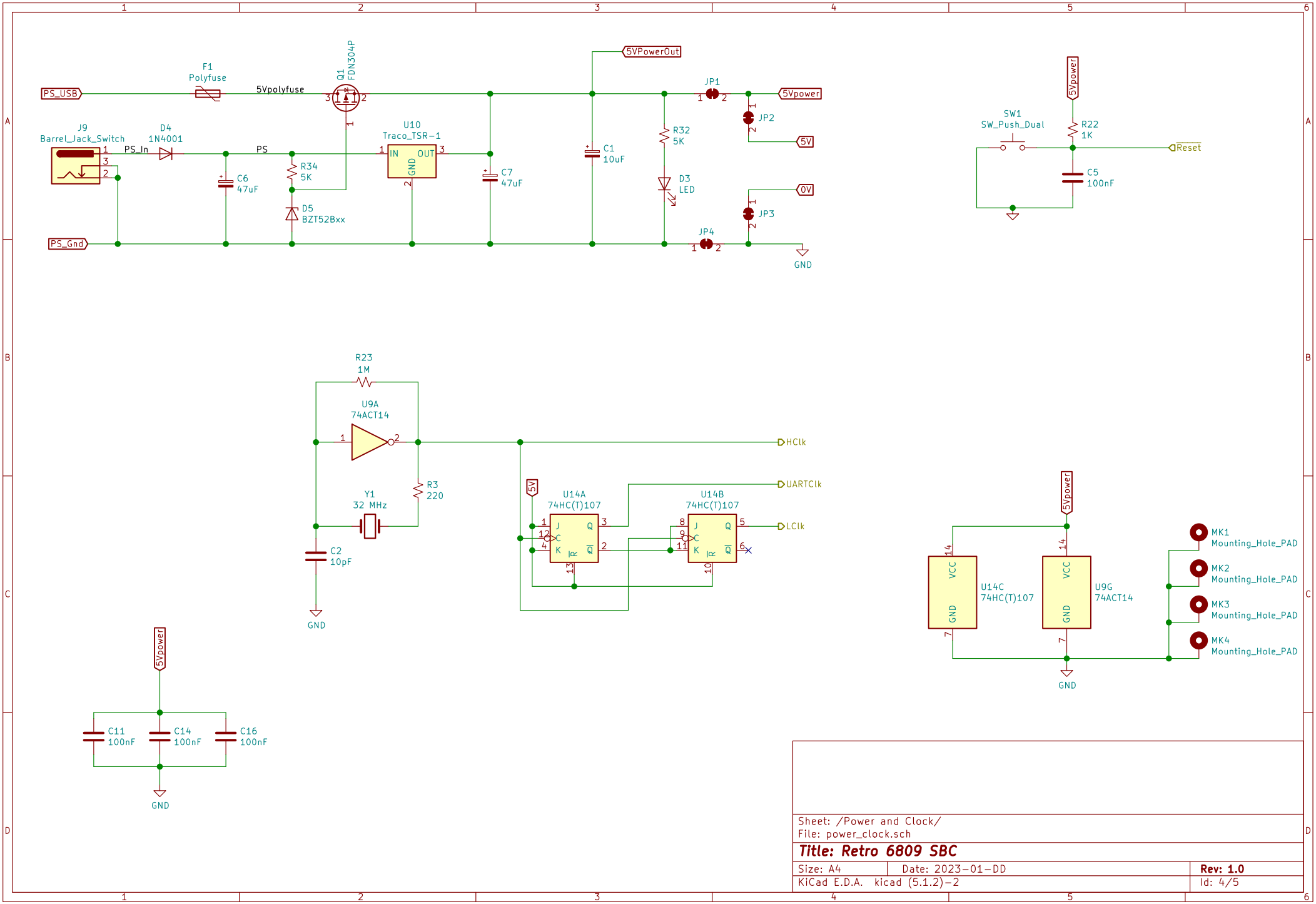

Sheet: /Power and Clock/
File: power_clock.sch

Title: Retro 6809 SBC

Size: A4	Date: 2023-01-DD	**Rev: 1.0**
KiCad E.D.A. kicad (5.1.2)-2		Id: 4/5

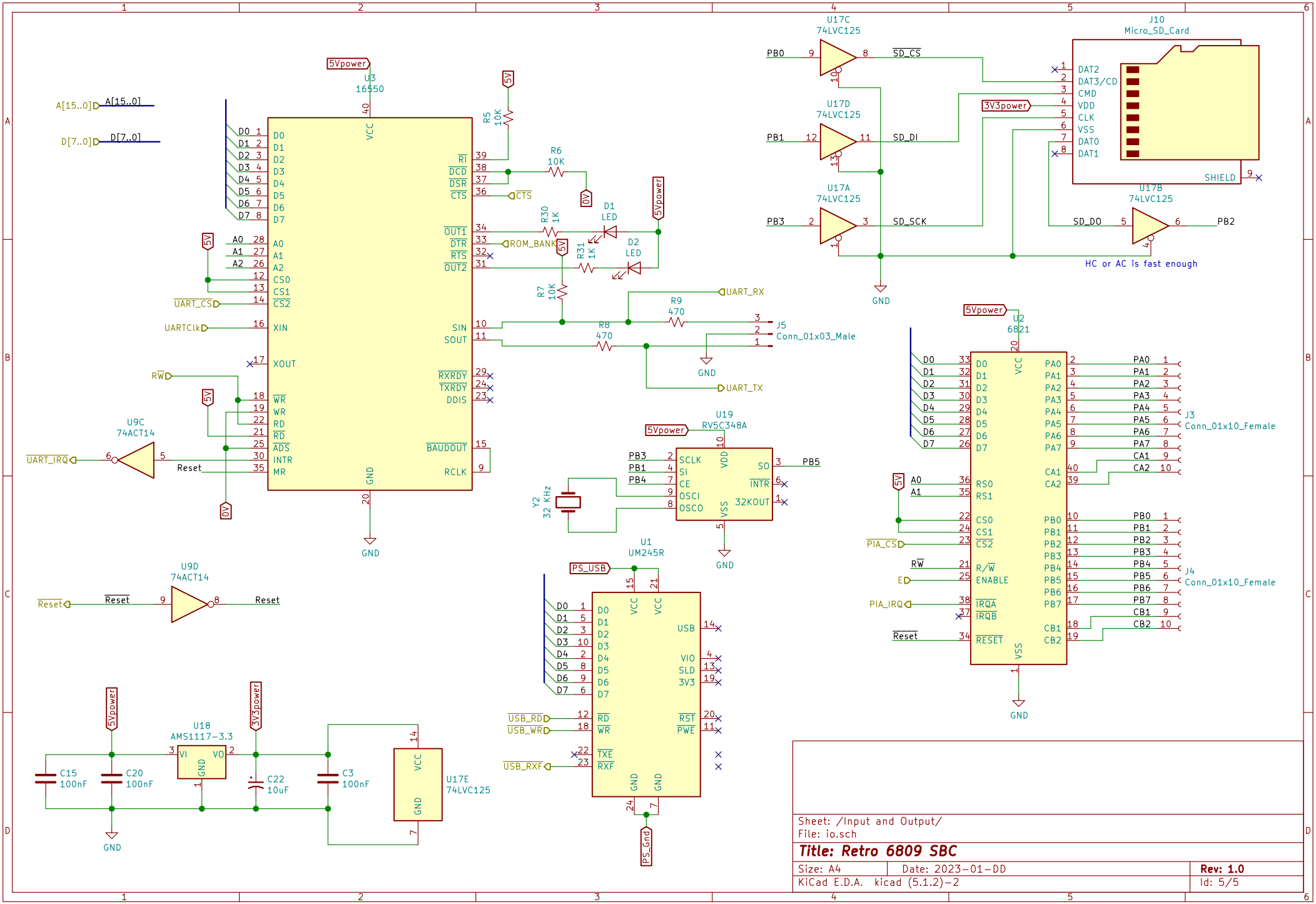

Sheet: /Input and Output/
File: io.sch

Title: Retro 6809 SBC

Size: A4	Date: 2023-01-DD	Rev: 1.0
KiCad E.D.A. kicad (5.1.2)-2		Id: 5/5