Bill of Materials

no	part name	qty	production method	material	color	finish	Comments (PARTS)
1	251001_SSU_Aluminium Cover_PART_01	1	Bending	Aluminum	No color	Anodizing after welding	Forms a weldassembly with: 251001_SSU_Bracket_PART_00
2	251001_SSU_Bracket_PART_01	1	Bending	Aluminum	No color	Anodizing after welding	Forms a weld assembly with: 251001_SSU_Aluminium Cover_PART_00

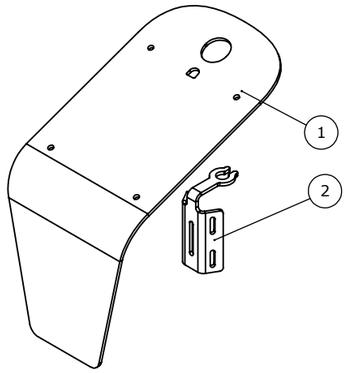

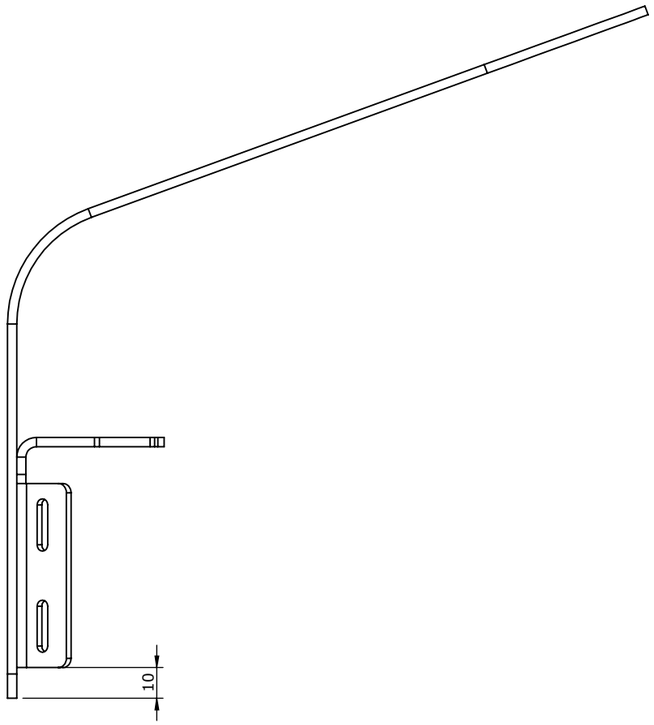

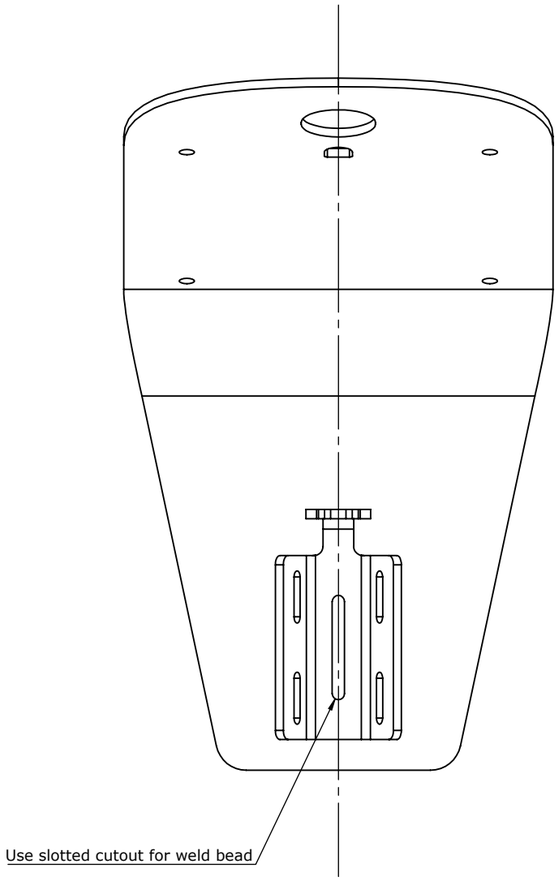

GEOMETRY ACCORDING TO DXF FILES

Reggs

www.reggs.com
Paul van Vlissingenstraat 6a
1096BK Amsterdam

DO NOT SCALE DRAWING

TITLE:	251001_SSU_Aluminium weld assembly_DRAWING_00		UNLESS OTHERWISE SPECIFIED:
PROJECT:	251001	DATE: 23-8-2016	COMMENTS: -
REVISION:	00	DRAWN BY: JD	
SCALE:	1:2	APPROVED BY: TvB	
UNIT:	MM	STATUS: PRELIMINARY	

PROPRIETARY AND CONFIDENTIAL
The information contained in this drawing is the sole property of Reggs. Any reproduction in part or as a whole without the written permission of Reggs is prohibited.

SHEET 1 OF 1 | A3