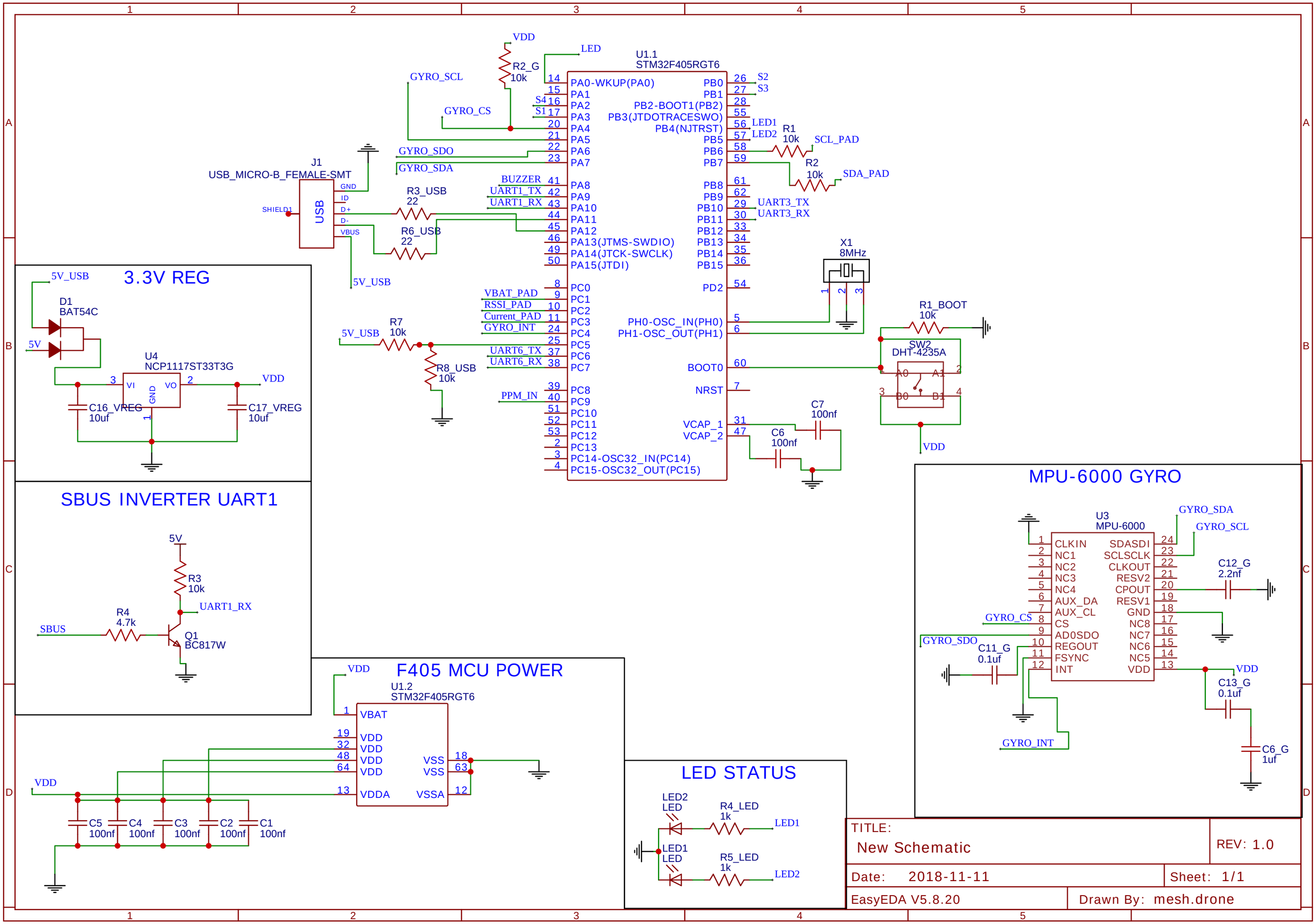
U1.1
STM32F405RGT6
PA0-WKUP(PA0)
PA1
PA2
PA3
PA4
PA5
PA6
PA7
PA8
PA9
PA10
PA11
PA12
PA13(JTMS-SWDIO)
PA14(JTCK-SWCLK)
PA15(JTDI)
PC0
PC1
PC2
PC3
PC4
PC5
PC6
PC7
PC8
PC9
PC10
PC11
PC12
PC13
PC14-OSC32_IN(PC14)
PC15-OSC32_OUT(PC15)
PB0
PB1
PB2-BOOT1(PB2)
PB3(JTDOTRACESWO)
PB4(NJTRST)
PB5
PB6
PB7
PB8
PB9
PB10
PB11
PB12
PB13
PB14
PB15
PD2
PH0-OSC_IN(PH0)
PH1-OSC_OUT(PH1)
BOOT0
NRST
VCAP_1
VCAP_2
VDD
LED
R2_G
10k
GYRO_SCL
GYRO_CS
GYRO_SDO
GYRO_SDA
S4
S1
S2
S3
LED1
LED2
R1
10k
SCL_PAD
R2
10k
SDA_PAD
UART3_TX
UART3_RX
BUZZER
UART1_TX
UART1_RX
VBAT_PAD
RSSI_PAD
Current_PAD
GYRO_INT
UART6_TX
UART6_RX
PPM_IN
J1
USB_MICRO-B_FEMALE-SMT
SHIELD1
USB
GND
ID
D+
D-
VBUS
R3_USB
22
R6_USB
22
5V_USB
R7
10k
R8_USB
10k
X1
8MHz
R1_BOOT
10k
SW2
DHT-4235A
A0
A1
B0
B1
C7
100nf
C6
100nf
3.3V REG
5V_USB
D1
BAT54C
5V
U4
NCP1117ST33T3G
VI
VO
GND
VDD
C16_VREG
10uf
C17_VREG
10uf
SBUS INVERTER UART1
5V
R3
10k
UART1_RX
R4
4.7k
SBUS
Q1
BC817W
F405 MCU POWER
U1.2
STM32F405RGT6
VBAT
VDD
VDD
VDD
VDD
VDDA
VSS
VSS
VSSA
C5
100nf
C4
100nf
C3
100nf
C2
100nf
C1
100nf
LED STATUS
LED2
LED
R4_LED
1k
LED1
LED1
LED
R5_LED
1k
LED2
MPU-6000 GYRO
U3
MPU-6000
CLKIN
NC1
NC2
NC3
NC4
AUX_DA
AUX_CL
CS
AD0SDO
REGOUT
FSYNC
INT
SDASDI
SCLSCLK
CLKOUT
RESV2
CPOUT
RESV1
GND
NC8
NC7
NC6
NC5
VDD
GYRO_SDA
GYRO_SCL
C12_G
2.2nf
GYRO_CS
GYRO_SDO
C11_G
0.1uf
C13_G
0.1uf
C6_G
1uf
GYRO_INT
TITLE:
New Schematic
REV: 1.0
Date: 2018-11-11
Sheet: 1/1
EasyEDA V5.8.20
Drawn By: mesh.drone