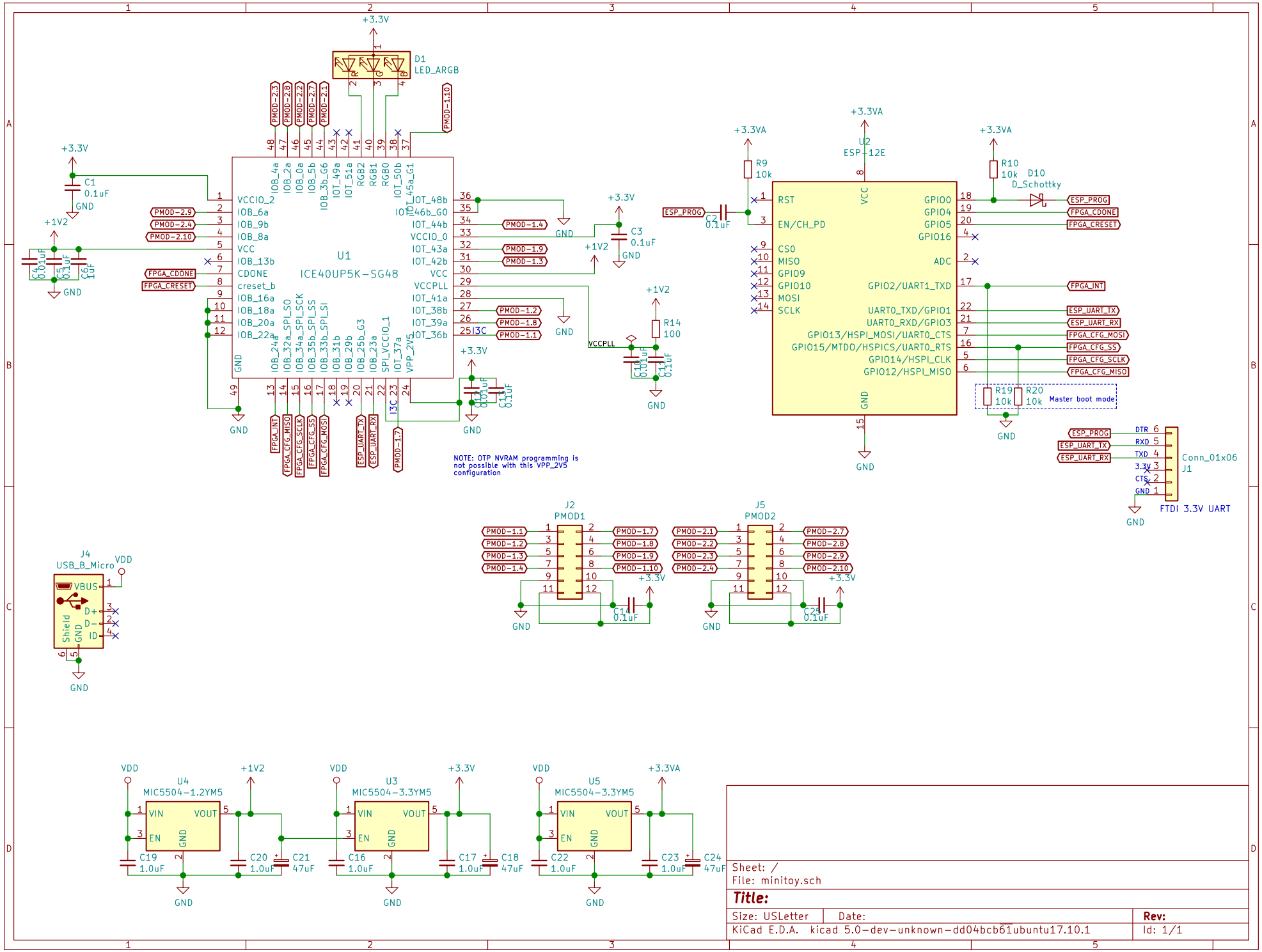
D1
LED_ARGB
U1
ICE40UP5K-SG48
VCCIO_2
IOB_6a
IOB_9b
IOB_8a
VCC
IOB_13b
CDONE
creset_b
IOB_16a
IOB_18a
IOB_20a
IOB_22a
IOB_24a
IOB_32a_SPI_SO
IOB_34a_SPI_SCK
IOB_35b_SPI_SS
IOB_33b_SPI_SI
IOB_31b
IOB_29b
IOB_25b_G3
IOB_23a
SPI_VCCIO_1
IOT_37a
VPP_2V5
IOB_4a
IOB_2a
IOB_0a
IOB_5b
IOB_3b_G6
IOT_49a
IOT_51a
RGB2
RGB1
RGB0
IOT_50b
IOT_45a_G1
IOT_48b
IOT_46b_G0
IOT_44b
VCCIO_0
IOT_43a
IOT_42b
VCCPLL
IOT_41a
IOT_38b
IOT_39a
IOT_36b
GND
NOTE: OTP NVRAM programming is not possible with this VPP_2V5 configuration
U2
ESP-12E
RST
EN/CH_PD
CS0
MISO
GPIO9
GPIO10
MOSI
SCLK
VCC
GPIO0
GPIO4
GPIO5
GPIO16
ADC
GPIO2/UART1_TXD
UART0_TXD/GPIO1
UART0_RXD/GPIO3
GPIO13/HSPI_MOSI/UART0_CTS
GPIO15/MTDO/HSPICS/UART0_RTS
GPIO14/HSPI_CLK
GPIO12/HSPI_MISO
Master boot mode
D10
D_Schottky
Conn_01x06
J1
FTDI 3.3V UART
J2
PMOD1
J5
PMOD2
J4
USB_B_Micro
VBUS
D+
D-
ID
Shield
U4
MIC5504-1.2YM5
U3
MIC5504-3.3YM5
U5
MIC5504-3.3YM5
VIN
VOUT
EN
Sheet: /
File: minitoy.sch
Title:
Size: USLetter
Date:
Rev:
KiCad E.D.A. kicad 5.0-dev-unknown-dd04bcb61ubuntu17.10.1
Id: 1/1