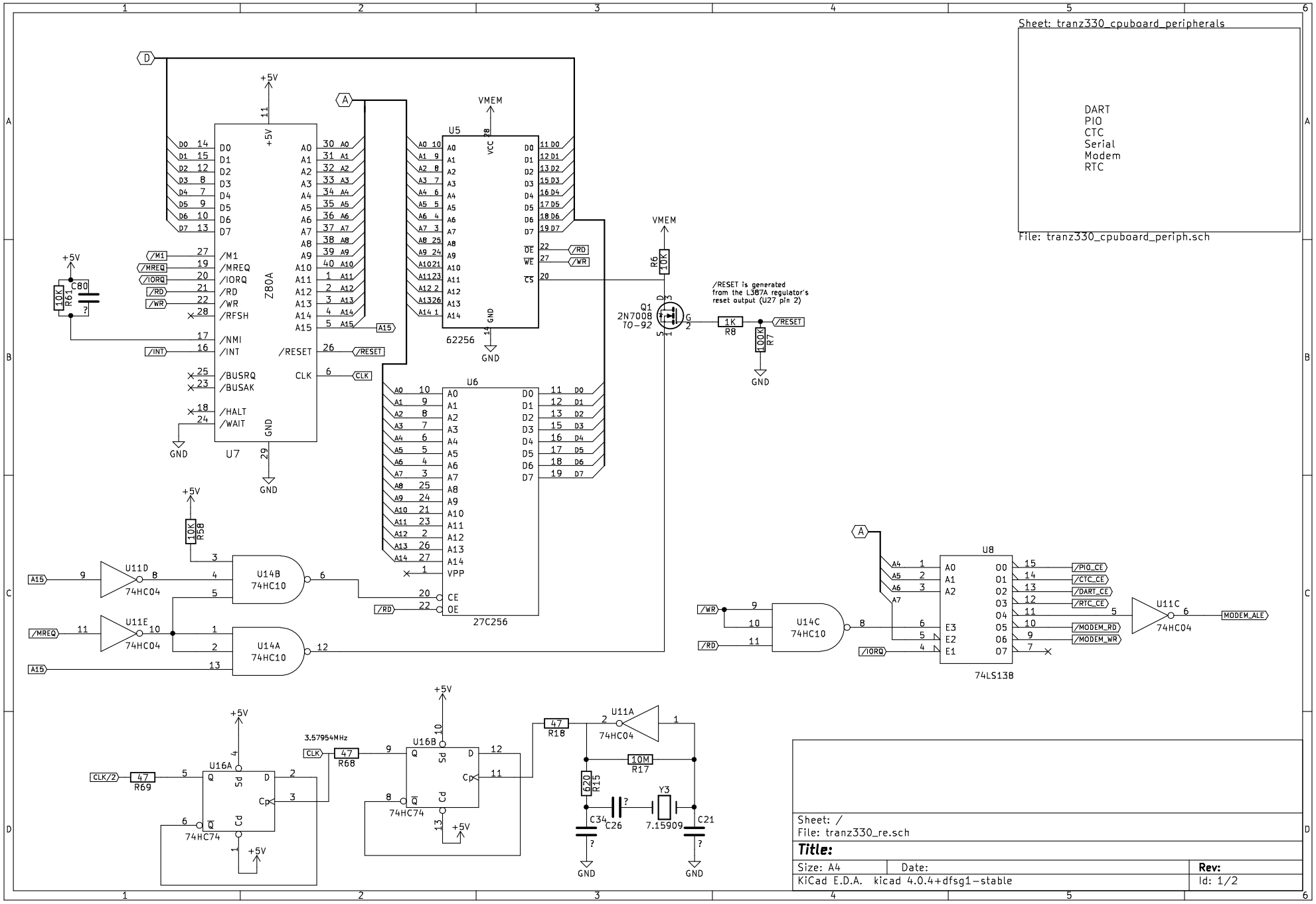
Sheet: tranz330_cpuboard_peripherals
DART
PIO
CTC
Serial
Modem
RTC
File: tranz330_cpuboard_periph.sch
U7
Z80A
U5
62256
U6
27C256
Q1
2N7008
TO-92
/RESET is generated from the L387A regulator's reset output (U27 pin 2)
U8
74LS138
U14A
U14B
U14C
U11A
U11C
U11D
U11E
74HC10
74HC04
U16A
U16B
74HC74
3.57954MHz
Y3
7.15909
Sheet: /
File: tranz330_re.sch
Title:
Size: A4
Date:
Rev:
KiCad E.D.A. kicad 4.0.4+dfsg1-stable
Id: 1/2

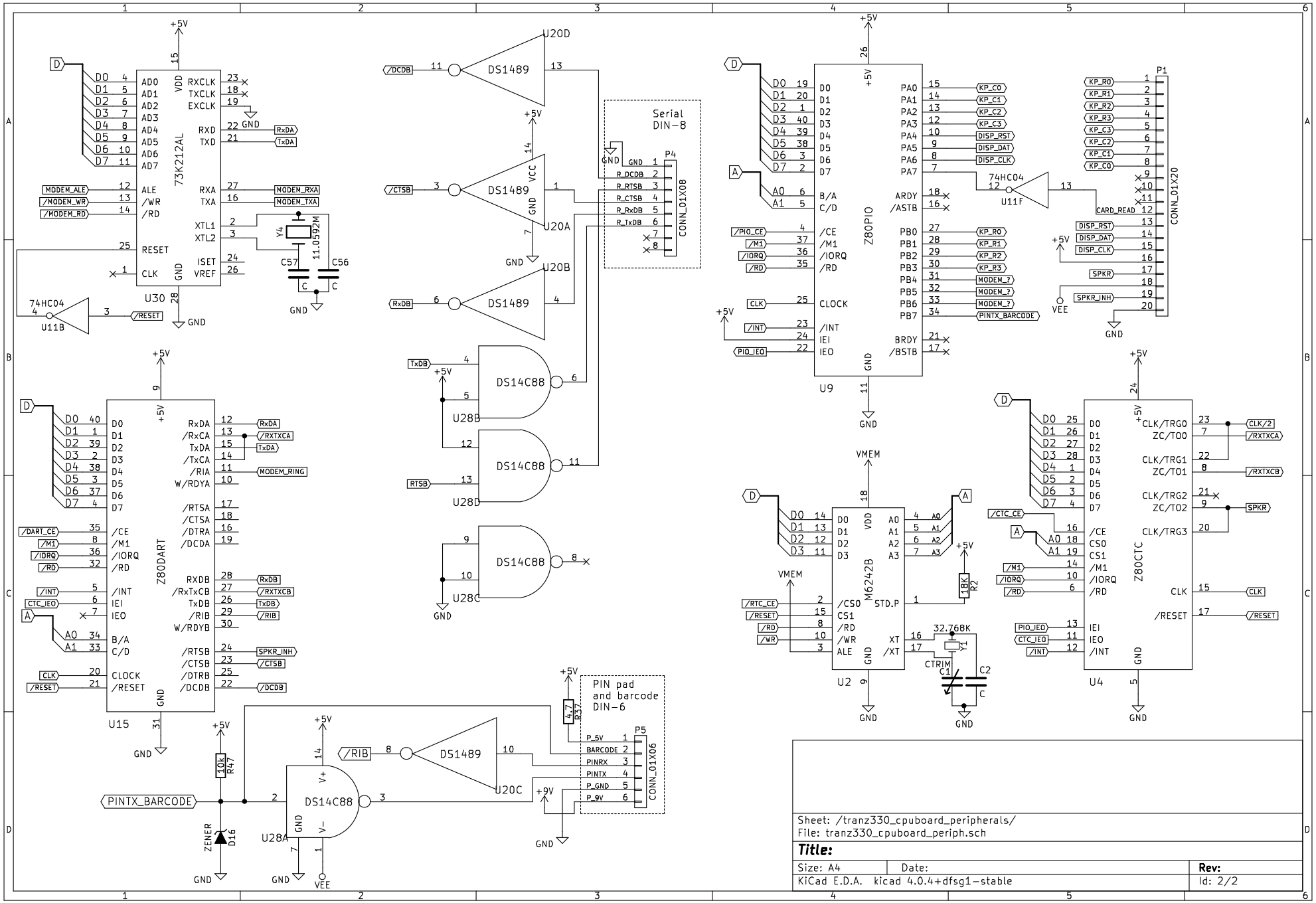
U30
73K212AL
U11B
74HC04
Y4
11.0592M
C57
C56
U20D
U20A
U20B
U20C
DS1489
Serial
DIN-8
P4
CONN_01X08
U28B
U28D
U28C
U28A
DS14C88
U15
Z80DART
U9
Z80PIO
U11F
P1
CONN_01X20
U2
M6242B
Y1
32.768K
U4
Z80CTC
R47
10k
D16
ZENER
R37
47
PIN pad
and barcode
DIN-6
P5
CONN_01X06
PINTX_BARCODE
Sheet: /tranz330_cpuboard_peripherals/
File: tranz330_cpuboard_periph.sch
Title:
Size: A4
Date:
Rev:
KiCad E.D.A. kicad 4.0.4+dfsg1-stable
Id: 2/2