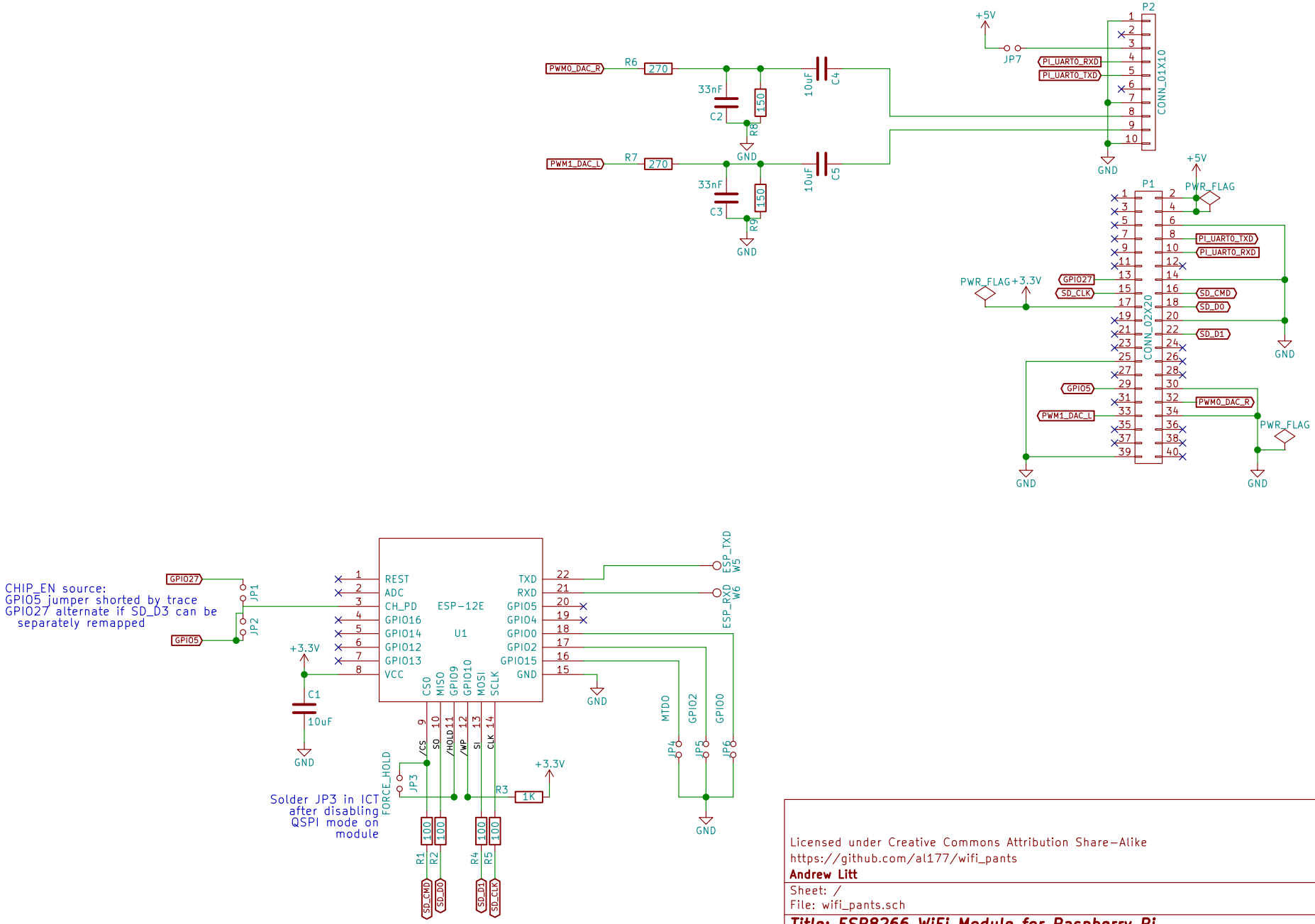

Licensed under Creative Commons Attribution Share-Alike
https://github.com/al177/wifi_pants
Andrew Litt

Sheet: /
File: wifi_pants.sch

Title: ESP8266 WiFi Module for Raspberry Pi

Size: USLetter	Date: 2016-01-16	Rev: v0.1
KiCad E.D.A. kicad 4.0.0-stable		Id: 1/1