Proprietary data, company confidential.
All rights reserved

Als Betriebsgeheimnis anvertraut
Alle Rechte vorbehalten

1	2	3	4	5

HIERARCHY	SHEET	PDF-SHEET
A5B00900206071-35317	index	sheet 1
	netlist1	sheet 2
	poslist1	sheet 3
	page1	----
	sheet1	sheet 4
	sheet2	sheet 5
	sheet3	sheet 6
	sheet4	sheet 7
	sheet5	sheet 8
	sheet6	sheet 9
	sheet7	sheet 10
	sheet8	sheet 11
	sheet9	sheet 12
	sheet10	sheet 13
	sheet11	sheet 14
	sheet12	sheet 15
	sheet13	sheet 16
	sheet16	sheet 17
	sheet17	sheet 18
	sheet19	sheet 19
	sheet21	sheet 20
	sheet22	sheet 21

A B C D E

				DATE	25.05.2005	EF81 MAINBOARD ASSEM B2+.4 (Q2640-A5) TOP HIERARCHY LEVEL SCHEMATIC	1:1
				USER	Milakovic		
				APPR'D			
4	35317	13.01.2006	SD	PHE RD HW LPDM			
3	35059	09.01.2006	Mil	BENQ mobile		241793	index
2	34702	19.12.2005	Mil				
1	34341	08.12.2005	Mil				
VERS.	CHANGE NUMBER	DATE	NAME	(Created by BOM number: A5B00900206072-35317)			

Proprietary data, company confidential.
All rights reserved

Als Betriebsgeheimnis anvertraut
Alle Rechte vorbehalten

1	2	3	4	5	6	7	8	9	10

5V_SW
/sheet13 14 D
/sheet22 14 C

A2(20)
/sheet9 6 B
/sheet22 2 C

ACC_PWR_EN
/sheet9 13 B
/sheet11 9 F

AMUX_OUT
/sheet7 8 F
/sheet13 8 D

ANT
/sheet2 1 E

ANT_POSN
/sheet2 5 F
/sheet9 10 D

ANT_SEL0
/sheet2 13 C
/sheet9 11 D

ANT_SEL1
/sheet2 13 C
/sheet9 11 D

ANT_SEL2
/sheet2 13 C
/sheet9 11 D

AUXON_AUXOR
/sheet7 7 B

AUXOP_AUXOL
/sheet7 8 B

AUXO_M
/sheet7 8 C
/sheet13 5 D

AUXO_P
/sheet7 8 C
/sheet13 5 D

BACKLIGHT_EN
/sheet9 6 A
/sheet9 10 F

BATT_FET_N
/sheet11 5 D
/sheet13 5 E

BT_CLK
/sheet9 10 C
/sheet16 14 C

BT_DATA
/sheet9 10 D
/sheet16 14 D

BT_ENABLE
/sheet9 11 D
/sheet16 15 C

BT_SBCK
/sheet9 11 C
/sheet16 15 D

BT_SBDT
/sheet9 10 C
/sheet16 14 D

BT_SBST
/sheet9 11 C
/sheet16 15 D

BT_TX_RX_N
/sheet9 11 D
/sheet16 15 D

BUFF_TCXO
/sheet13 8 E
/sheet17 6 B

BUFF_TCXO_BT
/sheet13 9 F
/sheet16 12 E

CAM1_PWR_EN
/sheet9 11 E
/sheet22 14 C

CAMIF_DATA(7:0)
/sheet9 14 D
/sheet22 15 C
/sheet22 15 D

CAMIF_DSP_CLK
/sheet9 8 D
/sheet22 14 D

CAMIF_HSYNC
/sheet9 10 D
/sheet22 14 C

CAMIF_PCLK
/sheet9 10 D
/sheet22 14 D

CAMIF_VSYNC
/sheet9 10 D
/sheet22 14 C

CHG_CNT_N
/sheet11 5 B
/sheet13 5 B

CTS_USB_D_M
/sheet1 14 C
/sheet12 13 C

DCD
/sheet1 14 C
/sheet12 13 D

EAR1ON
/sheet7 15 E
/sheet22 2 C

EAR1OP
/sheet7 15 D
/sheet22 2 C

EBI1_ADDR(14:1)
/sheet9 2 D
/sheet10 11 B
/sheet10 11 C

EBI1_D(15:0)
/sheet9 2 E

EBI1_D(23:16)
/sheet9 2 D

EBI1_D(31:0)
/sheet10 11 C

EBI1_D(31:24)
/sheet9 2 C

EBI2_D(7:0)
/sheet9 6 E
/sheet10 7 D
/sheet22 1 D
/sheet22 2 D

EL_EN
/sheet9 11 C
/sheet19 7 E

EXT_AUDIO_L
/sheet1 14 D
/sheet7 2 A

EXT_AUDIO_R
/sheet1 14 C
/sheet7 2 B

EXT_AUDIO_REF
/sheet1 14 D
/sheet7 2 B

EXT_MIC
/sheet1 14 C
/sheet7 2 E

FUEL_GAUGE
/sheet11 5 E
/sheet21 5 D

FUEL_GAUGE_RXD
/sheet9 13 B
/sheet21 5 D

FUEL_GAUGE_TXD
/sheet9 13 C
/sheet21 5 D

GND_MIC
/sheet1 14 C
/sheet7 4 E
/sheet7 12 F
/sheet7 5 E
/sheet7 2 E

GSM1800_1900_TX
/sheet2 13 F
/sheet3 3 D

GSM1800_RXN
/sheet2 12 E
/sheet5 2 D

GSM1800_RXP
/sheet2 12 E
/sheet5 2 D

GSM1900_RXN
/sheet2 12 E
/sheet5 2 D

GSM1900_RXP
/sheet2 12 D
/sheet5 2 D

GSM900_RXN
/sheet2 12 E
/sheet5 2 D

GSM900_RXP
/sheet2 12 F
/sheet5 2 D

GSM900_TX
/sheet2 13 F
/sheet3 3 D

GSM_PA_BAND
/sheet3 14 F
/sheet9 11 E

GSM_PA_EN
/sheet3 14 B
/sheet9 8 E

GSM_PA_PWR_CTL_REF
/sheet7 7 F
/sheet13 8 C

GSM_TX_CP
/sheet3 14 D
/sheet5 2 E

GSM_TX_VCO_FB
/sheet3 14 C
/sheet5 2 E

HALL_SW_CLOSED_N
/sheet9 10 D
/sheet22 2 C

HDET1
/sheet4 13 E
/sheet7 8 F

I2C_SCL
/sheet9 8 C
/sheet7 2 C
/sheet22 14 D

I2C_SDA
/sheet9 8 C
/sheet7 2 C
/sheet22 14 D

ICHARGE
/sheet11 5 C
/sheet13 8 D

ISNS_M
/sheet11 5 C
/sheet13 8 D

JTAG_PS_HOLD
/page1 4 C
/page1 1 C
/sheet13 4 D

JTAG_RESOUT_N
/page1 2 B
/page1 2 B
/page1 5 B
/sheet17 7 D
/sheet17 12 D
/sheet17 12 D

JTAG_RTCK
/page1 2 B
/page1 3 B
/page1 5 B
/sheet17 12 E
/sheet17 12 E
/sheet17 10 E

JTAG_TCK
/page1 5 C
/page1 3 C
/page1 1 C
/page1 1 C
/sheet17 12 E
/sheet17 12 E
/sheet17 6 E

JTAG_TDI
/page1 1 C
/page1 2 C
/page1 5 C
/sheet17 12 E
/sheet17 12 E
/sheet17 6 E

JTAG_TDO
/page1 2 B
/page1 3 B
/page1 5 B
/sheet17 10 D
/sheet17 12 D
/sheet17 12 D

JTAG_TMS
/page1 1 C
/page1 2 C
/page1 5 C
/sheet17 12 E
/sheet17 12 E
/sheet17 6 E

JTAG_TRST_N
/page1 1 C
/page1 2 C
/page1 5 C
/sheet17 12 E
/sheet17 12 E
/sheet17 6 E

KEYSENSE_N(0)
/sheet9 13 C
/sheet22 14 B

KEYSENSE_N(1)
/sheet9 13 C
/sheet22 14 B

KEYSENSE_N(2)
/sheet9 13 D
/sheet22 14 B

KEYSENSE_N(3)
/sheet9 13 D
/sheet22 14 B

KEYSENSE_N(4)
/sheet9 13 D
/sheet22 14 B

KEY_BACKLIGHT
/sheet22 14 C
/sheet22 8 F

KEY_BACKLIGHT_EN
/sheet9 13 E
/sheet22 7 E

KYPD_11
/sheet9 13 D
/sheet22 14 B

KYPD_13
/sheet9 13 D
/sheet22 14 B

KYPD_15
/sheet9 13 D
/sheet22 14 B

KYPD_17
/sheet9 13 D
/sheet22 14 C

KYPD_9
/sheet9 13 D
/sheet22 14 B

KYPD_MEMO
/sheet9 13 E
/sheet22 14 C

LB2_N
/sheet9 6 B
/sheet10 7 D

LCD2_CS_N
/sheet9 6 B
/sheet22 2 D

LCD_BACKLIGHT
/sheet22 12 F
/sheet22 2 D

LCD_BCKLT_PWM
/sheet9 11 D
/sheet22 12 E
/sheet22 7 E

LCD_EN
/sheet9 11 C
/sheet19 1 C

LCD_RESET_N
/sheet13 4 G
/sheet22 2 D

LCD_RST_N
/sheet13 5 E
/sheet13 2 G

LCD_VSYNC
/sheet9 2 A
/sheet22 2 D

MIC1N
/sheet7 7 D

MIC1P
/sheet7 7 D

MIC2N
/sheet7 7 E

MIC2P
/sheet7 7 E

MICBIAS
/sheet7 7 E

MICFBN
/sheet7 10 F

MICFBP
/sheet7 10 F

MICINN
/sheet7 10 F

MICINP
/sheet7 10 F

MICOUTN
/sheet7 10 F

MICOUTP
/sheet7 10 F

MMC_CD
/sheet9 6 A
/sheet22 2 B

MMC_CLK
/sheet9 11 C
/sheet22 2 B

MMC_CMD
/sheet9 11 C
/sheet22 2 B

MMC_DATA
/sheet9 10 C
/sheet22 2 B

MSM_BOOT_MODE1
/sheet8 4 E
/sheet17 12 D

MSM_MODE1A
/sheet8 4 E
/sheet17 12 D

MSM_MODE2A
/sheet8 4 E
/sheet17 12 D

MSM_UART1_CTS_N
/sheet9 13 B
/sheet12 5 C

MSM_UART1_DCD_N
/sheet9 13 E
/sheet12 5 C

MSM_UART1_RFR_N
/sheet9 13 B
/sheet12 5 C

MSM_UART1_RXD
/sheet9 13 B
/sheet12 5 C

MSM_UART1_TXD
/sheet9 13 B
/sheet12 5 C

NAND_FLASH_CS_N
/sheet9 6 A
/sheet10 5 D

NAND_FLASH_READY
/sheet9 6 B
/sheet10 5 D

OE2_N
/sheet9 6 B
/sheet10 7 D
/sheet22 2 C

PA_ON0
/sheet4 13 B
/sheet9 8 B

PA_ON0_N
/sheet4 13 A
/sheet4 13 F

PA_R0
/sheet9 11 B
/sheet13 5 D

PA_RAMP
/sheet3 14 F
/sheet7 11 D

PA_THERM
/sheet7 5 F

PHONE_ON
/sheet13 5 D
/sheet22 14 C

PM_INT_N
/sheet9 13 E
/sheet13 5 A

PM_SBCK
/sheet9 13 C
/sheet13 5 C

PM_SBDT
/sheet9 13 C
/sheet13 5 C

PM_SBST
/sheet9 13 C
/sheet13 5 C

PON_RST_N
/sheet13 5 C
/sheet17 3 C

POWER
/sheet1 14 B
/sheet11 13 E
/sheet11 3 B
/sheet13 1 B

PS_HOLD
/sheet9 11 E
/sheet13 4 D

RESOUT1_N
/sheet10 7 D
/sheet13 2 G
/sheet17 9 C

RFR6250_TCXO
/sheet6 9 D
/sheet10 5 F

RF_THERM
/sheet7 5 F

RTR6250_TCXO
/sheet5 5 F
/sheet10 5 F

RTS_USB_D_P
/sheet1 14 C
/sheet12 13 C

RX
/sheet1 14 C

/sheet12 13 D

RX0_I_M
/sheet6 9 D
/sheet5 4 E
/sheet7 8 E

RX0_I_P
/sheet6 9 D
/sheet5 4 E
/sheet7 8 E

RX0_Q_M
/sheet6 9 D
/sheet5 4 E
/sheet7 8 E

RX0_Q_P
/sheet6 9 D
/sheet5 4 E
/sheet7 8 E

SBCK_0
/sheet6 9 E
/sheet5 5 G
/sheet9 11 B

SBDT_0
/sheet6 9 E
/sheet5 4 F
/sheet9 10 B

SBST_0
/sheet6 9 E
/sheet5 5 G
/sheet9 11 B

SDRAM_A(0)
/sheet9 2 B
/sheet10 11 B

SDRAM_CAS_N
/sheet9 2 B
/sheet10 7 C

SDRAM_CLK
/sheet9 2 B
/sheet10 7 C

SDRAM_CLK_EN
/sheet9 2 A
/sheet10 7 C

SDRAM_CS_N
/sheet9 2 A
/sheet10 7 B

SDRAM_DQM(0)
/sheet9 2 B
/sheet10 7 C

SDRAM_DQM(1)
/sheet9 2 B
/sheet10 7 C

SDRAM_DQM(2)
/sheet9 2 B
/sheet10 7 C

SDRAM_DQM(3)
/sheet9 2 B
/sheet10 7 C

SDRAM_RAS_N
/sheet9 2 B

/sheet10 7 C

SDRAM_WE_N
/sheet9 2 B
/sheet10 7 C

SLEEP_CLK
/sheet13 4 A
/sheet17 6 B

SPKR_OUT_M
/sheet13 5 D
/sheet22 2 C

SPKR_OUT_P
/sheet13 5 D
/sheet22 2 C

TCXO
/sheet10 5 G
/sheet13 5 E

TCXO_EN
/sheet9 13 B
/sheet13 5 E

TRK_LO_ADJ
/sheet9 8 A
/sheet10 1 F

TX
/sheet1 14 C
/sheet12 13 D

TX_AGC_ADJ
/sheet5 5 G
/sheet9 8 A

TX_IREF
/sheet5 4 G
/sheet8 11 A
/sheet7 10 D

TX_I_M
/sheet5 6 F
/sheet7 10 E

TX_I_P
/sheet5 6 F
/sheet7 10 E

TX_ON
/sheet5 5 F
/sheet9 11 B

TX_Q_M
/sheet5 6 E
/sheet7 10 E

TX_Q_P
/sheet5 6 E
/sheet7 10 E

TX_VCO_0_EN_N
/sheet3 14 E
/sheet9 8 D

TX_VCO_1_EN_N
/sheet3 14 E
/sheet9 8 D

UB2_N
/sheet9 6 B
/sheet10 7 D

UIM_P_CLK
/sheet13 5 B
/sheet22 1 B

UIM_P_DATA
/sheet13 8 B
/sheet22 1 A

UIM_P_RESET
/sheet13 5 B
/sheet22 1 B

UMTS2100_TX
/sheet4 13 C
/sheet5 2 D

USB_CONN_D_M
/sheet12 5 F
/sheet13 9 C

USB_CONN_D_P
/sheet12 5 F
/sheet13 8 B

USB_DAT_VP
/sheet9 10 C
/sheet13 8 B

USB_OE_TP_N
/sheet9 11 C
/sheet13 5 B

USB_RS232_SEL1
/sheet9 13 C
/sheet12 13 C

USB_SE0_VM
/sheet9 10 B
/sheet13 8 C

USIM_CLK
/sheet9 13 B
/sheet13 5 B

USIM_DATA
/sheet9 13 B
/sheet13 9 B

USIM_RESET
/sheet9 13 B
/sheet13 5 B

VBATT
/sheet4 6 A
/sheet4 5 D
/sheet3 4 B
/sheet3 5 B
/sheet3 7 B
/sheet11 3 E
/sheet11 4 D
/sheet12 8 B
/sheet12 7 E
/sheet13 5 E

VDD1
/sheet5 7 E

VDD10
/sheet5 12 D

VDD13
/sheet5 12 D

VDD14
/sheet6 8 B

VDD15
/sheet6 8 B
/sheet6 8 B

VDD16
/sheet6 8 B

VDD17
/sheet6 8 B

VDD18
/sheet6 8 B

VDD19
/sheet6 8 B

VDD2
/sheet5 7 E

VDD23
/sheet6 8 C

VDD3
/sheet5 8 E

VDD4
/sheet5 8 E

VDD6
/sheet5 10 D
/sheet5 10 D
/sheet5 9 D

VDD9
/sheet5 12 D

VDD_BT
/sheet16 9 B
/sheet16 8 B
/sheet16 7 B
/sheet16 8 E

VPH_PWR
/sheet9 10 F
/sheet11 9 E
/sheet11 2 C
/sheet13 4 C
/sheet13 10 A
/sheet13 10 A
/sheet19 7 E
/sheet19 2 C
/sheet19 4 D
/sheet22 14 C

VREG_AUX1
/sheet13 13 B
/sheet22 2 B

VREG_AUX2
/sheet13 13 B
/sheet13 4 E
/sheet16 13 B

VREG_BCKLT
/sheet9 15 F
/sheet22 2 D

VREG_EL
/sheet19 11 D
/sheet22 2 B
/sheet22 2 B

VREG_LCD
/sheet19 4 C
/sheet22 2 D

VREG_MSMA
/sheet8 11 A
/sheet7 2 F
/sheet7 9 G
/sheet7 4 A
/sheet7 4 F
/sheet7 8 G
/sheet13 12 B

VREG_MSMC
/sheet8 11 D
/sheet13 11 B

VREG_MSME
/sheet8 11 C
/sheet10 6 D
/sheet10 5 B
/sheet10 6 C
/sheet10 6 A
/sheet13 2 F
/sheet13 11 B
/sheet13 4 F
/sheet22 2 C

VREG_MSMP
/sheet6 9 A
/sheet5 3 B
/page1 4 B
/sheet9 9 D
/sheet9 6 B
/sheet9 9 C
/sheet8 11 B
/sheet11 4 E
/sheet12 7 B
/sheet12 8 B
/sheet13 12 B
/sheet16 13 B
/sheet17 5 C
/sheet19 1 C
/sheet21 9 D
/sheet22 9 E
/sheet22 2 B
/sheet22 13 A
/sheet22 2 B

VREG_RFRX_0
/sheet2 7 A
/sheet2 5 D
/sheet13 12 B

VREG_RFRX_1
/sheet6 10 A
/sheet13 13 B

VREG_RFTX
/sheet4 7 D
/sheet4 7 A
/sheet3 8 A
/sheet3 12 C
/sheet5 7 C
/sheet5 7 C
/sheet5 12 C
/sheet5 8 C
/sheet5 10 C
/sheet5 11 C
/sheet5 12 C
/sheet5 12 C
/sheet13 12 B

VREG_SYNTH
/sheet5 8 C
/sheet13 12 B

VREG_TCXO
/sheet6 13 A

/sheet10 2 F
/sheet13 12 B
/sheet13 8 E

VREG_UIM
/sheet13 13 B
/sheet22 1 B

VREG_USB
/sheet13 13 D

WCDMA_RX
/sheet6 4 D
/sheet2 7 G

WCDMA_TX
/sheet4 3 C
/sheet2 13 F

WDOG_EN
/page1 1 C
/page1 3 C
/page1 5 C
/sheet8 4 E
/sheet17 12 D

WE2_N
/sheet9 6 B
/sheet10 7 D
/sheet22 9 D

VERS.	CHANGE NUMBER	DATE	NAME
4	35317	13.01.2006	SD
3	35059	09.01.2006	Mil
2	34702	19.12.2005	Mil
1	34341	08.12.2005	Mil

PHE RD HW LPDM

BENQ mobile

DATE	25.05.2005
USER	Milakovic
APPR'D	

EF81 MAINBOARD
ASSEM B2+.4 (Q2640-A5)
TOP HIERARCHY LEVEL
SCHEMATIC

1:1

241793

netlist1

(Created by BOM number: A5B00900206072-35317)

Proprietary data, company confidential.
All rights reserved

Als Betriebsgeheimnis anvertraut
Alle Rechte vorbehalten

C107 /sheet1 12 D	C419 /sheet4 11 C	C805 /sheet8 9 B	C1317 /sheet13 12 E	C2250 /sheet22 13 D	R203 /sheet2 5 D	R731 /sheet7 9 G	R2207 /sheet22 2 B	V1102 /sheet11 3 D
C108 /sheet1 12 D	C421 /sheet4 4 C	C806 /sheet8 9 B	C1318 /sheet13 12 E	C2251 /sheet22 14 D	R204 /sheet2 3 E	R732 /sheet7 2 F	R2208 /sheet22 11 C	V1200 /sheet12 6 C
C109 /sheet1 13 D	C422 /sheet4 5 C	C807 /sheet8 9 B	C1319 /sheet13 5 D	C2252 /sheet22 14 D	R205 /sheet2 7 A	R733 /sheet7 4 F	R2210 /sheet22 6 C	V1201 /sheet12 7 C
C110 /sheet1 4 D	C425 /sheet4 6 B	C808 /sheet8 9 B	C1320 /sheet13 13 E	C2253 /sheet22 3 A	R208 /sheet2 4 F	R734 /sheet7 2 G	R2211 /sheet22 11 B	V1301 /sheet13 9 D
C111 /sheet1 4 D	C500 /sheet5 3 C	C809 /sheet8 11 A	C1321 /sheet13 10 E	C2419 /sheet19 2 C	R209 /sheet2 2 E	R735 /sheet7 4 G	R2212 /sheet22 11 B	V1302 /sheet13 4 D
C112 /sheet1 5 D	C501 /sheet5 2 E	C810 /sheet8 8 C	C1322 /sheet13 10 E	C2420 /sheet19 3 C	R211 /sheet2 8 A	R736 /sheet7 8 G	R2213 /sheet22 11 B	V1303 /sheet13 3 C
C119 /sheet1 9 D	C503 /sheet5 9 E	C811 /sheet8 9 C	C1323 /sheet13 11 E	C2421 /sheet19 4 C	R213 /sheet2 3 E	R737 /sheet7 8 G	R2214 /sheet22 11 B	V1700 /sheet17 4 C
C120 /sheet1 9 D	C504 /sheet5 9 E	C812 /sheet8 9 C	C1324 /sheet13 11 E	C2422 /sheet19 10 E	R220 /sheet2 9 C	R741 /sheet7 10 D	R2215 /sheet22 11 B	V2101 /sheet21 9 E
C121 /sheet1 9 D	C506 /sheet5 12 E	C813 /sheet8 9 C	C1325 /sheet13 12 E	C2426 /sheet19 8 E	R221 /sheet2 10 C	R900 /sheet9 10 A	R2216 /sheet22 11 B	V2200 /sheet22 13 F
C122 /sheet1 9 D	C507 /sheet5 11 E	C814 /sheet8 9 C	C1326 /sheet13 12 E	C2427 /sheet19 7 E	R300 /sheet3 13 D	R901 /sheet9 2 B	R2217 /sheet22 11 B	V2201 /sheet22 9 F
C123 /sheet1 9 D	C508 /sheet5 11 E	C815 /sheet8 10 C	C1327 /sheet13 12 E	D400 /sheet4 7 C	R301 /sheet3 10 D	R902 /sheet9 9 A	R2218 /sheet22 6 C	X100 /sheet1 3 D
C126 /sheet1 6 D	C509 /sheet5 11 E	C816 /sheet8 10 C	C1328 /sheet13 13 E	D500 /sheet5 3 G	R302 /sheet3 10 D	R904 /sheet9 9 B	R2219 /sheet22 6 C	X200 /sheet2 3 E
C127 /sheet1 6 D	C510 /sheet5 12 E	C817 /sheet8 10 C	C1329 /sheet13 13 E	D800-3 /sheet9 3 E	R303 /sheet3 12 C	R905 /sheet9 8 C	R2220 /sheet22 6 C	X301 /sheet3 3 G
C128 /sheet1 6 D	C512 /sheet5 12 E	C818 /sheet8 8 D	C1330 /sheet13 13 E	D800-4 /sheet9 12 E	R304 /sheet3 9 D	R906 /sheet9 9 C	R2222 /sheet22 6 D	X501 /sheet5 1 G
C200 /sheet2 6 B	C513 /sheet5 7 E	C819 /sheet8 9 D	C1331 /sheet13 13 E	D800-1 /sheet8 6 D	R305 /sheet3 9 D	R907 /sheet9 9 D	R2223 /sheet22 6 C	X601 /sheet6 1 G
C201 /sheet2 12 D	C514 /sheet5 7 E	C820 /sheet8 9 D	C1332 /sheet13 5 F	D800-6 /sheet8 6 G	R306 /sheet3 13 D	R908 /sheet9 9 D	R2224 /sheet22 6 D	X801 /sheet8 2 G
C202 /sheet2 7 A	C515 /sheet5 8 E	C821 /sheet8 9 D	C1333 /sheet13 8 F	D800-5 /sheet7 9 F	R307 /sheet3 14 F	R909 /sheet9 8 D	R2225 /sheet22 11 B	X1101 /sheet11 1 E
C204 /sheet2 8 C	C516 /sheet5 8 E	C822 /sheet8 9 D	C1334 /sheet13 4 G	D800-2 /sheet17 8 C	R308 /sheet3 13 F	R910 /sheet9 13 F	R2226 /sheet22 11 B	X1601 /sheet16 1 G
C206 /sheet2 10 C	C517 /sheet5 10 E	C823 /sheet8 10 D	C1335 /sheet13 8 A	D1001 /sheet10 9 E	R309 /sheet3 13 D	R911 /sheet9 4 B	R2227 /sheet22 11 C	X2200 /sheet22 7 D
C208 /sheet2 5 E	C522 /sheet5 2 F	C824 /sheet8 10 D	C1336 /sheet13 8 A	D1300 /sheet13 6 F	R310 /sheet3 9 D	R912 /sheet9 11 F	R2230 /sheet22 15 E	Z200 /sheet2 9 E
C209 /sheet2 12 D	C523 /sheet5 10 E	C825 /sheet8 10 D	C1337 /sheet13 9 A	D1301 /sheet13 2 G	R311 /sheet3 9 D	R913 /sheet9 13 G	R2231 /sheet22 15 F	Z201 /sheet2 9 E
C210 /sheet2 8 E	C524 /sheet5 10 E	C826 /sheet8 11 D	C1338 /sheet13 11 A	D2200 /sheet22 7 F	R312 /sheet3 14 E	R914 /sheet9 9 E	R2232 /sheet22 8 D	Z202 /sheet2 9 F
C214 /sheet2 3 E	C525 /sheet5 2 F	C827 /sheet8 8 E	C1339 /sheet13 10 B	L100 /sheet1 7 C	R313 /sheet3 14 E	R1000 /sheet10 2 F	R2233 /sheet22 11 B	Z203 /sheet2 7 F
C215 /sheet2 8 E	C527 /sheet5 8 E	C828 /sheet8 9 E	C1340 /sheet13 4 D	L101 /sheet1 7 D	R314 /sheet3 8 B	R1002 /sheet10 6 C	R2234 /sheet22 12 B	Z300 /sheet3 11 D
C216 /sheet2 12 E	C528 /sheet5 4 G	C829 /sheet8 9 E	C1341 /sheet13 4 C	L102 /sheet1 7 D	R315 /sheet3 8 C	R1003 /sheet10 6 D	R2235 /sheet22 12 B	Z400 /sheet4 4 C
C217 /sheet2 5 E	C529 /sheet5 6 E	C830 /sheet8 9 E	C1346 /sheet13 8 F	L201 /sheet2 11 D	R316 /sheet3 8 A	R1006 /sheet10 2 F	R2236 /sheet22 13 B	Z401 /sheet4 10 C
C218 /sheet2 5 E	C530 /sheet5 6 F	C831 /sheet8 9 E	C1600 /sheet16 10 C	L202 /sheet2 11 E	R317 /sheet3 14 B	R1100 /sheet11 4 B	R2237 /sheet22 13 B	Z402 /sheet4 8 E
C219 /sheet2 8 E	C531 /sheet5 6 E	C832 /sheet8 10 E	C1602 /sheet16 5 D	L203 /sheet2 2 E	R318 /sheet3 5 C	R1101 /sheet11 3 B	R2261 /sheet22 10 F	Z602 /sheet6 6 F
C220 /sheet2 2 E	C532 /sheet5 6 F	C833 /sheet8 10 E	C1603 /sheet16 7 D	L204 /sheet2 9 E	R319 /sheet3 7 C	R1102 /sheet11 3 C	R2262 /sheet22 10 F	Z1000 /sheet10 3 G
C221 /sheet2 3 F	C535 /sheet5 6 F	C834 /sheet8 10 E	C1604 /sheet16 5 D	L205 /sheet2 10 E	R321 /sheet3 13 F	R1103 /sheet11 12 E	R2263 /sheet22 4 B	Z1200 /sheet12 9 C
C222 /sheet2 8 F	C537 /sheet5 6 E	C835 /sheet8 11 E	C1605 /sheet16 6 D	L206 /sheet2 11 E	R322 /sheet3 10 D	R1104 /sheet11 12 F	R2264 /sheet22 3 A	Z1201 /sheet12 8 F
C223 /sheet2 12 F	C600 /sheet6 7 A	C836 /sheet8 11 E	C1611 /sheet16 13 D	L207 /sheet2 2 E	R323 /sheet3 4 D	R1105 /sheet11 10 F	R2420 /sheet19 1 C	Z1300 /sheet13 3 B
C224 /sheet2 8 F	C601 /sheet6 7 A	C837 /sheet8 10 B	C1612 /sheet16 10 B	L208 /sheet2 4 E	R324 /sheet3 4 D	R1106 /sheet11 4 E	R2423 /sheet19 8 F	Z1600 /sheet16 4 D
C227 /sheet2 6 E	C602 /sheet6 6 B	C900 /sheet9 9 B	C1613 /sheet16 13 D	L209 /sheet2 11 E	R400 /sheet4 8 C	R1107 /sheet11 2 F	R2425 /sheet19 10 E	Z1700 /sheet17 3 B
C228 /sheet2 4 F	C608 /sheet6 11 C	C901 /sheet9 10 B	C1614 /sheet16 9 E	L210 /sheet2 9 E	R401 /sheet4 8 C	R1108 /sheet11 4 E	TP1701 /page1 5 B	
C229 /sheet2 10 D	C609 /sheet6 11 C	C902 /sheet9 13 F	C1615 /sheet16 10 D	L211 /sheet2 10 E	R402 /sheet4 7 E	R1109 /sheet11 2 F	TP1702 /page1 5 B	
C230 /sheet2 10 D	C610 /sheet6 11 C	C903 /sheet9 14 F	C1616 /sheet16 9 E	L212 /sheet2 10 E	R404 /sheet4 7 E	R1112 /sheet11 4 B	TP1703 /page1 5 B	
C231 /sheet2 10 E	C611 /sheet6 12 C	C904 /sheet9 12 F	C1617 /sheet16 11 E	L213 /sheet2 11 E	R405 /sheet4 7 D	R1205 /sheet12 8 E	TP1704 /page1 5 C	
C232 /sheet2 10 E	C612 /sheet6 12 C	C905 /sheet9 9 D	C1618 /sheet16 8 E	L214 /sheet2 11 F	R407 /sheet4 9 E	R1206 /sheet12 7 E	TP1705 /page1 5 C	
C235 /sheet2 10 F	C613 /sheet6 12 C	C906 /sheet9 11 F	C1619 /sheet16 8 E	L215 /sheet2 9 F	R408 /sheet4 10 E	R1207 /sheet12 8 G	TP1706 /page1 5 C	
C236 /sheet2 11 F	C617 /sheet6 13 C	C1000 /sheet10 5 B	C1620 /sheet16 9 E	L216 /sheet2 10 F	R409 /sheet4 7 A	R1300 /sheet13 5 A	TP1707 /page1 5 C	
C237 /sheet2 8 D	C620 /sheet6 9 C	C1001 /sheet10 5 B	C1621 /sheet16 10 E	L217 /sheet2 8 E	R410 /sheet4 8 A	R1301 /sheet13 6 A	TP1709 /page1 5 C	
C238 /sheet2 8 E	C624 /sheet6 10 C	C1002 /sheet10 6 B	C1700 /sheet17 4 C	L225 /sheet2 6 F	R411 /sheet4 8 F	R1302 /sheet13 5 B	TP1708 /page1 5 C	
C239 /sheet2 8 F	C625 /sheet6 10 C	C1003 /sheet10 6 B	C1701 /sheet17 3 C	L300 /sheet3 4 B	R412 /sheet4 11 C	R1303 /sheet13 1 C	TP1710 /page1 5 D	
C240 /sheet2 5 E	C627 /sheet6 6 D	C1004 /sheet10 7 B	C1702 /sheet17 6 D	L320 /sheet3 13 C	R420 /sheet4 6 B	R1305 /sheet13 6 D	TP900 /sheet9 9 E	
C250 /sheet2 7 E	C629 /sheet6 5 D	C1005 /sheet10 7 B	C2200 /sheet22 3 D	L401 /sheet4 4 C	R421 /sheet4 6 B	R1306 /sheet13 4 E	TP901 /sheet9 15 F	
C300 /sheet3 13 C	C630 /sheet6 7 F	C1006 /sheet10 7 B	C2201 /sheet22 3 D	L500 /sheet5 10 C	R500 /sheet5 3 B	R1310 /sheet13 7 F	TP806 /sheet8 11 D	
C301 /sheet3 4 B	C631 /sheet6 7 F	C1007 /sheet10 7 B	C2202 /sheet22 3 D	L502 /sheet5 12 C	R501 /sheet5 11 C	R1311 /sheet13 6 F	TP805 /sheet8 11 C	
C302 /sheet3 5 B	C632 /sheet6 8 F	C1008 /sheet10 6 B	C2204 /sheet22 3 D	L503 /sheet5 8 C	R502 /sheet5 12 C	R1312 /sheet13 10 B	TP804 /sheet8 11 A	
C304 /sheet3 12 C	C633 /sheet6 6 F	C1009 /sheet10 2 F	C2205 /sheet22 4 D	L506 /sheet5 8 C	R503 /sheet5 7 C	R1313 /sheet13 8 F	TP706 /sheet7 15 D	
C305 /sheet3 4 C	C634 /sheet6 5 F	C1010 /sheet10 5 F	C2210 /sheet22 10 B	L507 /sheet5 5 F	R504 /sheet5 12 C	R1314 /sheet13 2 F	TP707 /sheet7 15 E	
C306 /sheet3 5 C	C635 /sheet6 5 F	C1011 /sheet10 5 F	C2211 /sheet22 10 B	L508 /sheet5 5 F	R505 /sheet5 7 C	R1315 /sheet13 2 G	TP1100 /sheet11 2 E	
C307 /sheet3 5 C	C701 /sheet7 6 B	C1012 /sheet10 3 G	C2213 /sheet22 3 A	L509 /sheet5 5 E	R508 /sheet5 4 G	R1600 /sheet16 13 C	TP1101 /sheet11 2 E	
C308 /sheet3 6 C	C703 /sheet7 4 A	C1013 /sheet10 8 B	C2214 /sheet22 4 A	L510 /sheet5 5 E	R509 /sheet5 2 F	R1602 /sheet16 5 D	TP1104 /sheet11 2 F	
C309 /sheet3 6 C	C704 /sheet7 7 E	C1014 /sheet10 8 B	C2215 /sheet22 4 A	L602 /sheet6 11 B	R510 /sheet5 2 F	R1605 /sheet16 9 E	TP1102 /sheet11 2 F	
C310 /sheet3 13 D	C705 /sheet7 7 E	C1100 /sheet11 4 B	C2216 /sheet22 4 D	L603 /sheet6 12 B	R511 /sheet5 2 F	R1606 /sheet16 9 E	TP1103 /sheet11 2 F	
C311 /sheet3 14 D	C706 /sheet7 6 B	C1101 /sheet11 2 C	C2217 /sheet22 5 A	L606 /sheet6 10 A	R600 /sheet6 6 A	R1607 /sheet16 12 C	TP1300 /sheet13 4 A	
C313 /sheet3 4 D	C709 /sheet7 4 D	C1102 /sheet11 2 C	C2218 /sheet22 5 A	L607 /sheet6 6 D	R601 /sheet6 7 B	R1608 /sheet16 12 C	TP1307 /sheet13 12 B	
C314 /sheet3 4 D	C710 /sheet7 3 D	C1103 /sheet11 9 E	C2219 /sheet22 5 A	L608 /sheet6 5 D	R603 /sheet6 11 B	R1610 /sheet16 11 E	TP1311 /sheet13 13 D	
C315 /sheet3 13 D	C711 /sheet7 5 A	C1104 /sheet11 12 E	C2220 /sheet22 5 A	L609 /sheet6 7 E	R604 /sheet6 12 B	R1611 /sheet16 11 E	TP1310 /sheet13 13 B	
C316 /sheet3 13 F	C712 /sheet7 2 A	C1105 /sheet11 3 E	C2222 /sheet22 6 A	L610 /sheet6 7 E	R607 /sheet6 13 B	R1700 /sheet17 5 C	TP1305 /sheet13 12 B	
C317 /sheet3 12 F	C713 /sheet7 2 B	C1106 /sheet11 3 E	C2223 /sheet22 2 D	L611 /sheet6 5 F	R608 /sheet6 13 A	R1701 /sheet17 5 C	TP1306 /sheet13 12 B	
C318 /sheet3 13 E	C715 /sheet7 4 D	C1107 /sheet11 2 B	C2224 /sheet22 4 D	L900 /sheet9 12 F	R609 /sheet6 9 A	R1702 /sheet17 6 D	TP1304 /sheet13 12 B	
C319 /sheet3 13 E	C716 /sheet7 4 D	C1108 /sheet11 2 C	C2225 /sheet22 6 A	L901 /sheet9 11 F	R610 /sheet6 8 E	R1703 /page1 4 C	TP1313 /sheet13 12 B	
C321 /sheet3 4 D	C717 /sheet7 7 D	C1109 /sheet11 3 B	C2226 /sheet22 9 F	L1301 /sheet13 9 D	R703 /sheet7 6 E	R1710 /page1 4 B	TP1308 /sheet13 13 B	
C322 /sheet3 4 D	C718 /sheet7 6 D	C1110 /sheet11 4 D	C2228 /sheet22 12 D	L1302 /sheet13 10 D	R704 /sheet7 5 E	R1711 /page1 4 B	TP1600 /sheet16 4 D	
C323 /sheet3 7 C	C720 /sheet7 12 E	C1111 /sheet11 13 E	C2229 /sheet22 12 D	L1303 /sheet13 11 D	R712 /sheet7 6 D	R2101 /sheet21 9 E	TP2401 /sheet19 10 E	
C324 /sheet3 8 C	C721 /sheet7 12 E	C1200 /sheet12 8 B	C2230 /sheet22 5 D	L1304 /sheet13 10 A	R713 /sheet7 6 D	R2102 /sheet21 7 D	TP2400 /sheet19 4 C	
C325 /sheet3 7 A	C722 /sheet7 9 C	C1201 /sheet12 9 B	C2231 /sheet22 5 D	L1305 /sheet13 10 B	R714 /sheet7 6 E	R2103 /sheet21 7 D	TP2402 /sheet19 4 E	
C327 /sheet3 13 F	C723 /sheet7 9 C	C1203 /sheet12 7 F	C2232 /sheet22 5 D	L1600 /sheet16 7 C	R718 /sheet7 6 D	R2200 /sheet22 11 C	TP2200 /sheet22 12 C	
C328 /sheet3 3 C	C724 /sheet7 5 E	C1300 /sheet13 10 B	C2233 /sheet22 5 D	N200 /sheet2 6 E	R719 /sheet7 6 E	R2201 /sheet22 6 D	V200 /sheet2 7 B	
C329 /sheet3 14 C	C725 /sheet7 5 E	C1301 /sheet13 10 B	C2234 /sheet22 8 B	N300 /sheet3 6 D	R721 /sheet7 14 E	R2202 /sheet22 6 C	V300 /sheet3 8 B	
C400 /sheet4 7 B	C727 /sheet7 10 D	C1302 /sheet13 9 A	C2235 /sheet22 8 B	N600 /sheet6 7 E	R722 /sheet7 14 F	R2203 /sheet22 6 D	V400 /sheet4 8 B	
C401 /sheet4 6 B	C728 /sheet7 13 F	C1303 /sheet13 9 A	C2236 /sheet22 9 B	N700 /sheet7 4 B	R723 /sheet7 14 F	R2204 /sheet22 6 D	V900 /sheet9 14 F	
C402 /sheet4 7 B	C729 /sheet7 13 E	C1304 /sheet13 9 A	C2237 /sheet22 9 B	N900 /sheet9 12 F	R724 /sheet7 14 E	R2205 /sheet22 6 D	V1100 /sheet11 3 B	
C403 /sheet4 6 D	C734 /sheet7 3 G	C1305 /sheet13 10 A	C2238 /sheet22 9 B	N1100 /sheet11 11 F	R730 /sheet7 9 G	R2206 /sheet22 6 D	V1101 /sheet11 13 E	
C404 /sheet4 5 C	C735 /sheet7 5 G	C1306 /sheet13 10 A	C2239 /sheet22 9 B	N1300 /sheet13 6 E				
C406 /sheet4 13 C	C736 /sheet7 6 F	C1307 /sheet13 3 B	C2240 /sheet22 9 B	N1600 /sheet16 8 D				
C407 /sheet4 7 C	C737 /sheet7 7 F	C1308 /sheet13 2 B	C2241 /sheet22 10 B	N2402 /sheet19 3 C				
C408 /sheet4 9 D	C738 /sheet7 2 A	C1309 /sheet13 1 C	C2242 /sheet22 10 B	N2403 /sheet19 8 E				
C409 /sheet4 7 D	C739 /sheet7 2 B	C1310 /sheet13 2 C	C2243 /sheet22 13 D	R103 /sheet1 10 D				
C410 /sheet4 7 D	C740 /sheet7 2 B	C1311 /sheet13 2 C	C2244 /sheet22 13 D	R104 /sheet1 11 D				
C411 /sheet4 7 E	C742 /sheet7 2 B	C1312 /sheet13 2 C	C2245 /sheet22 4 A	R105 /sheet1 11 D				
C415 /sheet4 10 E	C743 /sheet7 7 E	C1313 /sheet13 5 D	C2246 /sheet22 2 A	R106 /sheet1 11 D				
C416 /sheet4 7 A	C746 /sheet7 11 E	C1314 /sheet13 6 D	C2247 /sheet22 2 A	R200 /sheet2 7 D				
C417 /sheet4 8 C	C747 /sheet7 11 E	C1315 /sheet13 5 E	C2248 /sheet22 3 A	R201 /sheet2 9 D				
C418 /sheet4 7 F	C804 /sheet8 8 B	C1316 /sheet13 12 E	C2249 /sheet22 13 D	R202 /sheet2 10 D				

VERS.	CHANGE NUMBER	DATE	NAME	
			DATE	25.05.2005
			USER	Milakovic
			APPR'D	
4	35317	13.01.2006	SD	PHE RD HW LPDM
3	35059	09.01.2006	Mil	
2	34702	19.12.2005	Mil	BENQ mobile
1	34341	08.12.2005	Mil	

EF81 MAINBOARD
ASSEM B2+.4 (Q2640-A5)
TOP HIERARCHY LEVEL
SCHEMATIC

1:1

241793

poslist1

(Created by BOM number: A5B00900206072-35317)

Propietary data, Company confidential.
all rights reserved

Als Betriebsgeheimnis anvertraut
alle Rechte vorbehalten

IO_INTERFACE

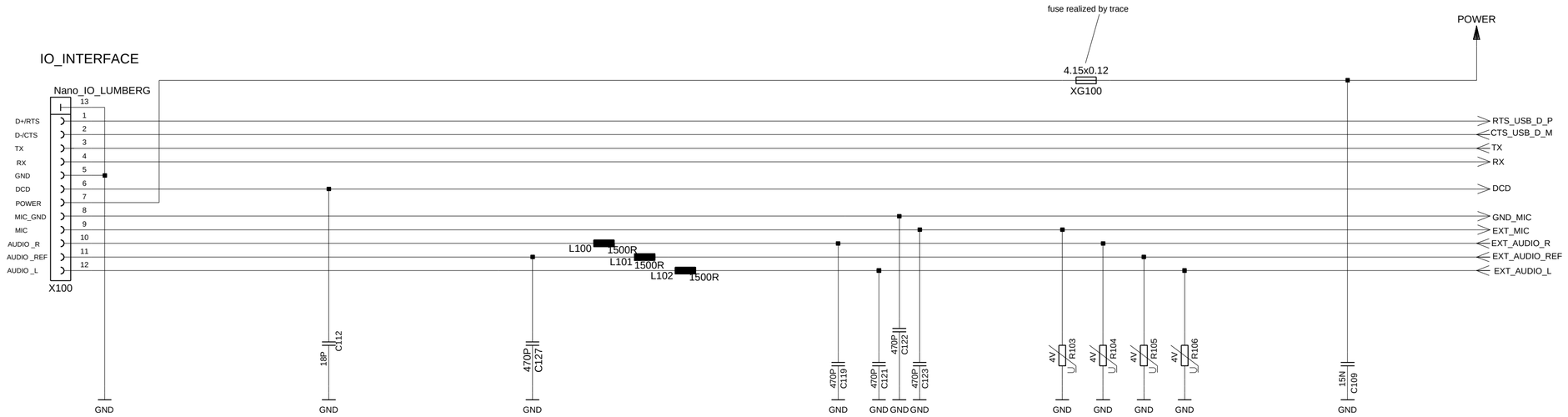

PCB PRODUCTION LABELS

TP_KLAR

TP_DATA

VERS.	CHANGE NUMBER	DATE	NAME	
				DATE 25.05.2005
				USER Milakovic
				APPR'D
4	35317	13.01.2006	SD	PHE RD HW LPDM
3	35059	09.01.2006	Mil	BENQ mobile
2	34702	19.12.2005	Mil	
1	34341	08.12.2005	Mil	

EF81 MAINBOARD
ASSEM B2+.4 (Q2640-A5)
TOP HIERARCHY LEVEL
SCHEMATIC

241793

1:1

sheet1

(Created by BOM number: A5B00900206072-35317)

Propietary data, Company confidential.
all rights reserved

Als Betriebsgeheimnis anvertraut
alle Rechte vorbehalten

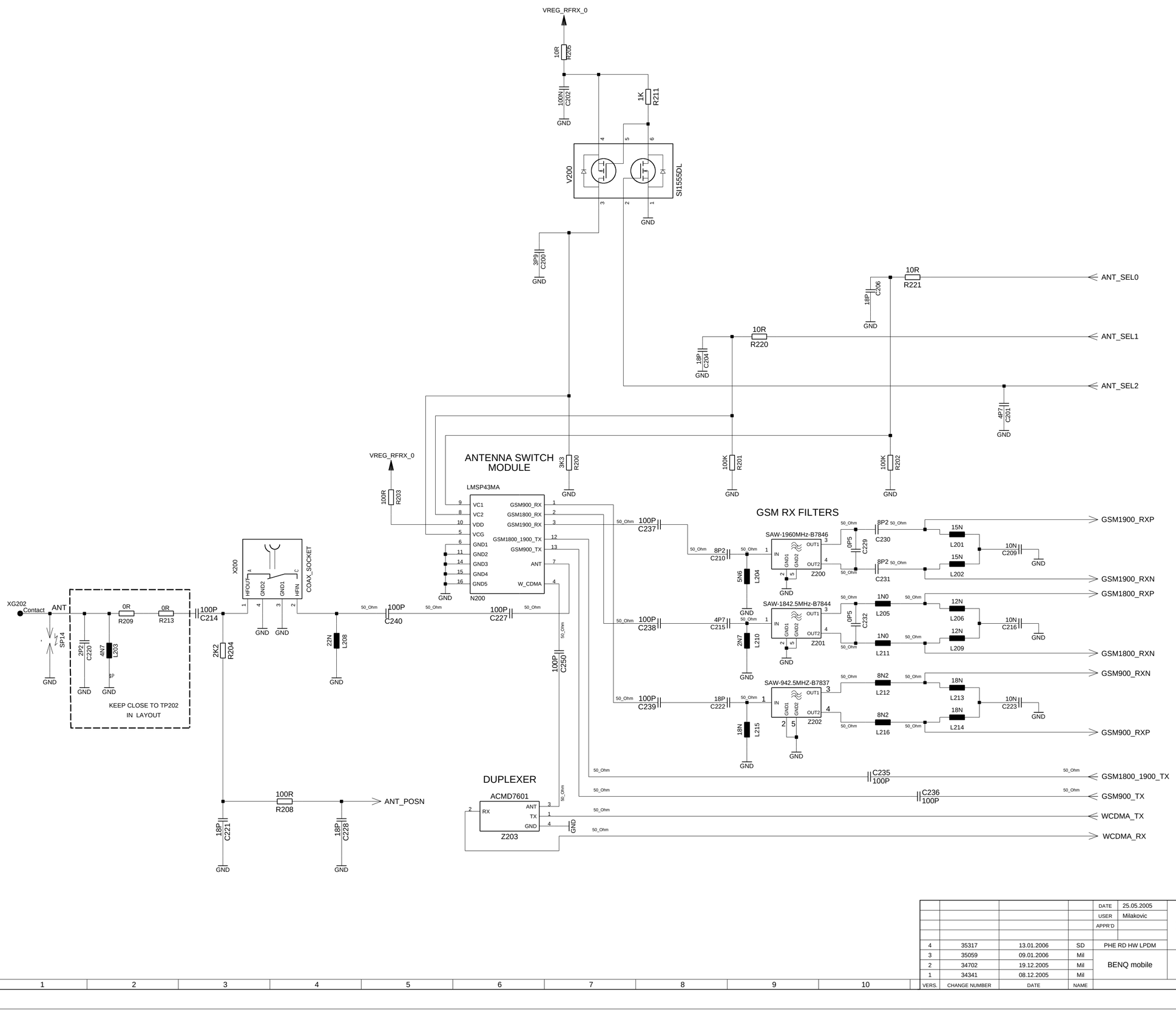

VERS.	CHANGE NUMBER	DATE	NAME	
4	35317	13.01.2006	SD	PHE RD HW LPDM
3	35059	09.01.2006	Mil	BENQ mobile
2	34702	19.12.2005	Mil	
1	34341	08.12.2005	Mil	

DATE 25.05.2005
USER Milakovic
APPR'D

EF81 MAINBOARD
ASSEM B2+.4 (Q2640-A5)
TOP HIERARCHY LEVEL
SCHEMATIC

1:1

241793

sheet2

(Created by BOM number: A5B00900206072-35317)

Propietary data, Company confidential.
all rights reserved

Als Betriebsgeheimnis anvertraut
alle Rechte vorbehalten

VREG_RFTX
100N C325
GND
1K R316
V300
SI1555DL
33R R314
GND
18P C323
2K2 R315
GND
18P C324
GND
100R R317
GSM_PA_EN
VBATT
600R/50MA L300
47P C328
GND
1U C305
GND
VBATT
15P C301
GND
0R R318
100N C306
GND
4U7 C302
GND
VBATT
0R R319
5P6 C309
GND
100N C308
GND
PF08143B
VDD1
VDD_IC
VBAND
POUT_DCS
POUT_GSM
GND(1:26)
N300
VDD2
VTXB
VRAMP
PIN_DCS
PIN_GSM
GSM1800_1900_TX
0R R323
GSM900_TX
0R R324
10R R304
330R R305
GND
330R R310
10R R311
VREG_RFTX
R303 10R
4U7 C304
GND
270R R301
270R R302
0R R322
Z300
824-915MHZ
OUT2
OUT1
SW1
SW2
VCC
VT
GND1
GND2
GND3
GND4
GND5
GND6
GND7
GND8
GND
100P C300
15N L320
GSM_TX_VCO_FB
47R R300
GND
100R R306
GSM_TX_CP
100P C310
GND
47R R309
COG
22N C315
GND
1N C311
COG
GND
GSM TX VCO
1K R313
TX_VCO_0_EN_N
1N C319
GND
1K R312
TX_VCO_1_EN_N
1N C318
GND
1K R308
470R R321
PA_RAMP
470P C317
GND
1N C327
GND
1K R307
GSM_PA_BAND
1N C316
GND
SR-PA-KESTREL
X301
1
GND

KESTREL MAIN - GSM TX & PA

VERS.	CHANGE NUMBER	DATE	NAME	
4	35317	13.01.2006	SD	PHE RD HW LPDM
3	35059	09.01.2006	Mil	
2	34702	19.12.2005	Mil	BENQ mobile
1	34341	08.12.2005	Mil	

DATE 25.05.2005
USER Milakovic
APPR'D

EF81 MAINBOARD
ASSEM B2+.4 (Q2640-A5)
TOP HIERARCHY LEVEL
SCHEMATIC

1:1

241793

sheet3

(Created by BOM number: A5B00900206072-35317)

Propietary data, Company confidential.
all rights reserved

Als Betriebsgeheimnis anvertraut
alle Rechte vorbehalten

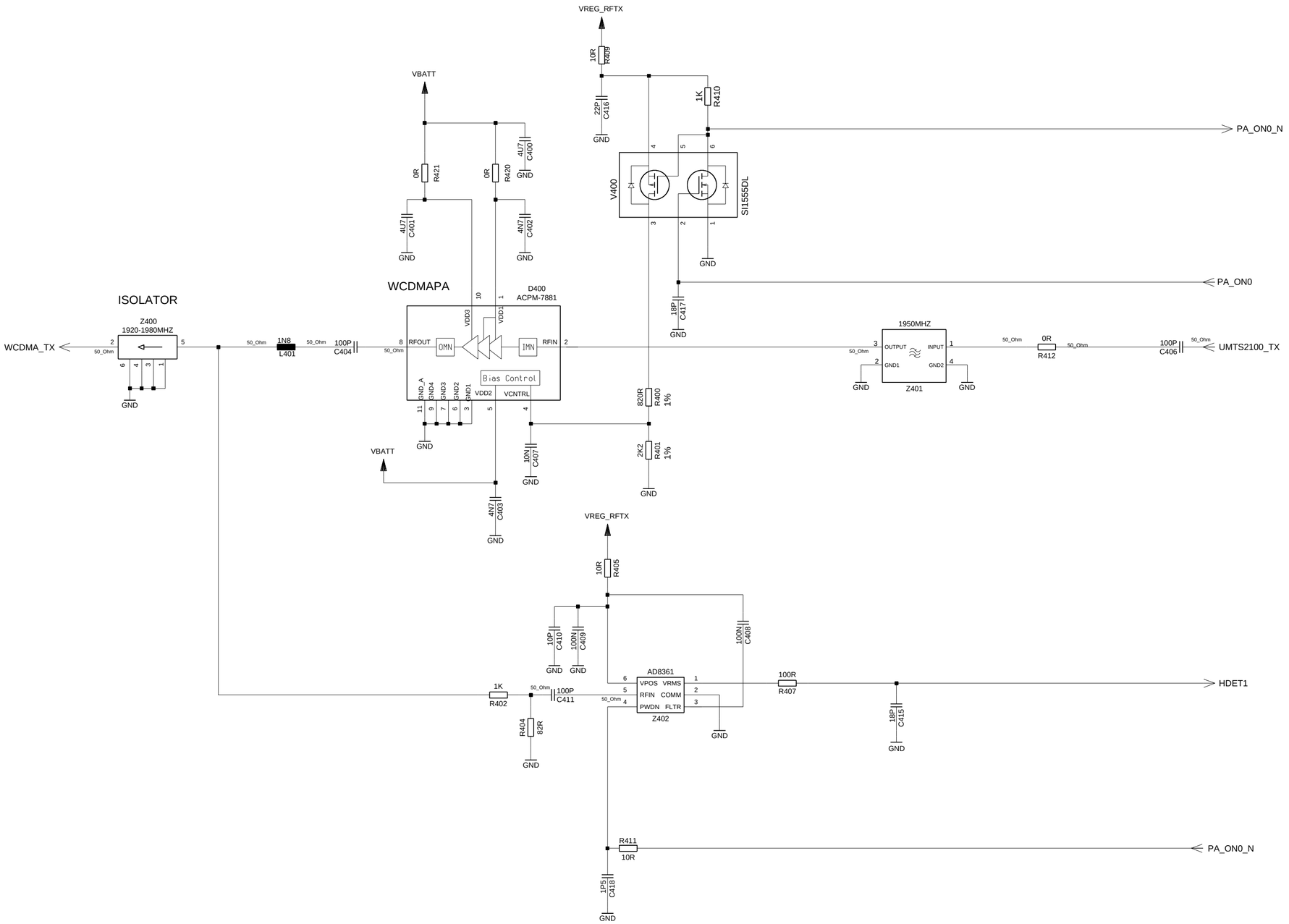

KESTREL MAIN - UMTS TX & PA

VERS.	CHANGE NUMBER	DATE	NAME	
4	35317	13.01.2006	SD	PHE RD HW LPDM
3	35059	09.01.2006	Mil	BENQ mobile
2	34702	19.12.2005	Mil	
1	34341	08.12.2005	Mil	

DATE 25.05.2005
USER Milakovic
APPR'D

EF81 MAINBOARD
ASSEM B2+.4 (Q2640-A5)
TOP HIERARCHY LEVEL
SCHEMATIC

1:1

241793

sheet4

(Created by BOM number: A5B00900206072-35317)

Propietary data, Company confidential.
all rights reserved

Als Betriebsgeheimnis anvertraut
alle Rechte vorbehalten

RF TRANSCEIVER

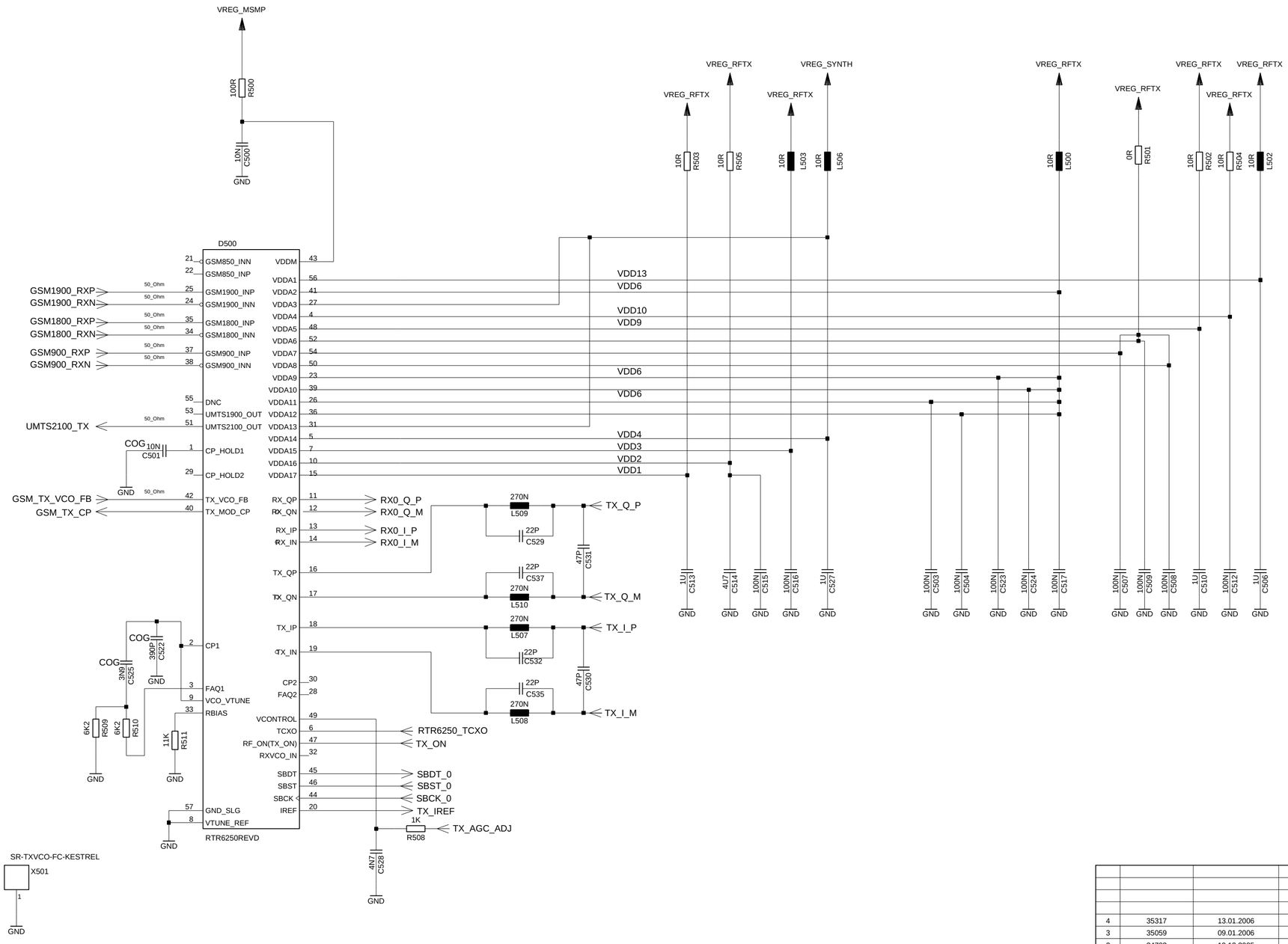

VERS.	CHANGE NUMBER	DATE	NAME		
				DATE	25.05.2005
				USER	Milakovic
				APPR'D	
4	35317	13.01.2006	SD	PHE RD HW LPDM	
3	35059	09.01.2006	Mil	BENQ mobile	
2	34702	19.12.2005	Mil		
1	34341	08.12.2005	Mil		

EF81 MAINBOARD
ASSEM B2+.4 (Q2640-A5)
TOP HIERARCHY LEVEL
SCHEMATIC

1:1

241793

sheet5

(Created by BOM number: A5B00900206072-35317)

Propietary data, Company confidential.
all rights reserved

Als Betriebsgeheimnis anvertraut
alle Rechte vorbehalten

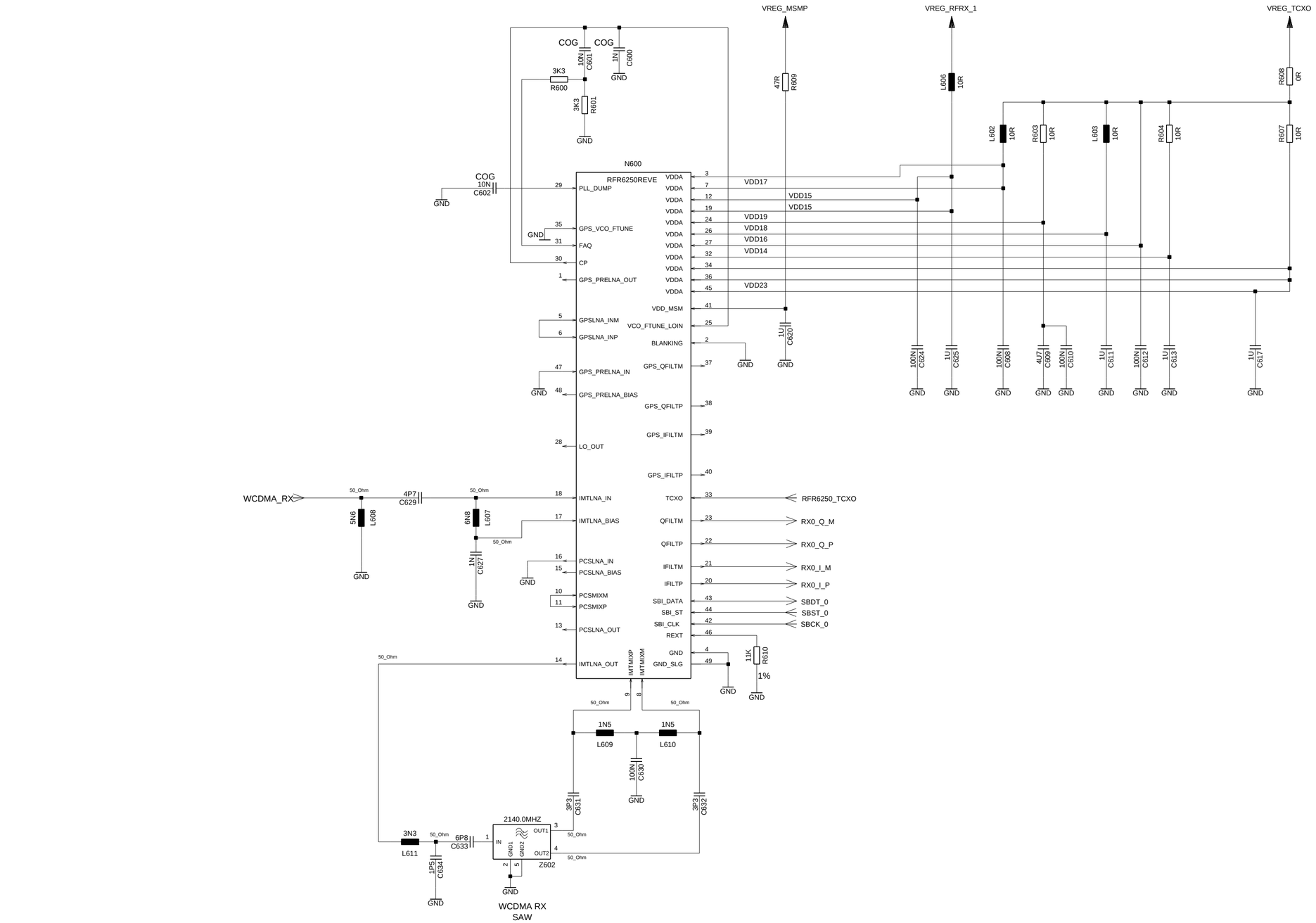

KESTREL MAIN - UMTS RECEIVER

VERS.	CHANGE NUMBER	DATE	NAME		
				DATE	25.05.2005
				USER	Milakovic
				APPR'D	
4	35317	13.01.2006	SD	PHE RD HW LPDM	
3	35059	09.01.2006	Mil	BENQ mobile	
2	34702	19.12.2005	Mil		
1	34341	08.12.2005	Mil		

EF81 MAINBOARD
ASSEM B2+.4 (Q2640-A5)
TOP HIERARCHY LEVEL
SCHEMATIC

1:1

241793

sheet6

(Created by BOM number: A5B00900206072-35317)

Propietary data, Company confidential.
all rights reserved

Als Betriebsgeheimnis anvertraut
alle Rechte vorbehalten

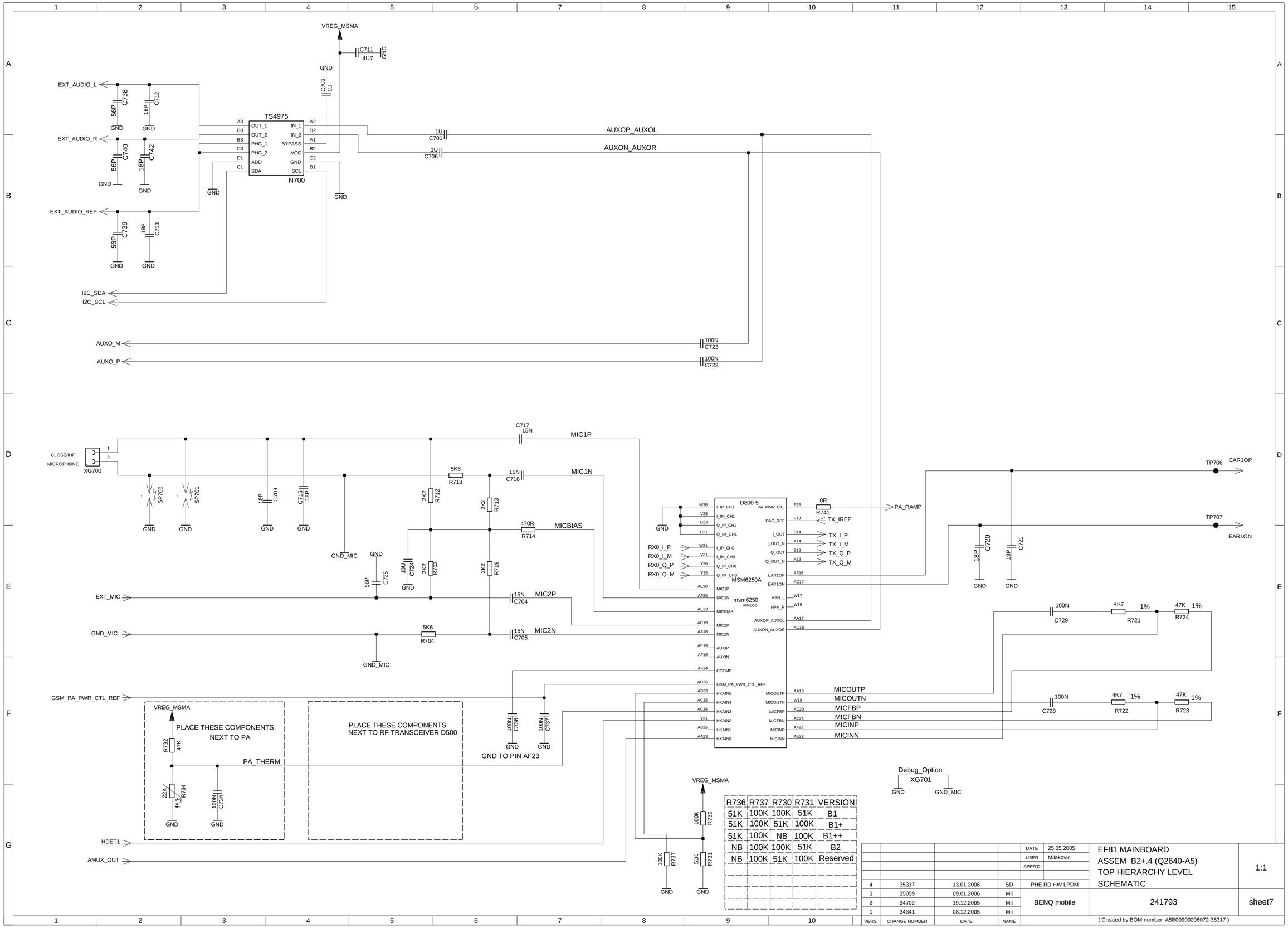

R736	R737	R730	R731	VERSION
51K	100K	100K	51K	B1
51K	100K	51K	100K	B1+
51K	100K	NB	100K	B1++
NB	100K	100K	51K	B2
NB	100K	51K	100K	Reserved

VERS.	CHANGE NUMBER	DATE	NAME
4	35317	13.01.2006	SD
3	35059	09.01.2006	Mil
2	34702	19.12.2005	Mil
1	34341	08.12.2005	Mil

DATE 25.05.2005
USER Milakovic
APPR'D

PHE RD HW LPDM

BENQ mobile

EF81 MAINBOARD
ASSEM B2+.4 (Q2640-A5)
TOP HIERARCHY LEVEL
SCHEMATIC

1:1

241793

sheet7

(Created by BOM number: A5B00900206072-35317)

Propietary data, Company confidential.
all rights reserved

Als Betriebsgeheimnis anvertraut
alle Rechte vorbehalten

POWER AND MODE PINS MUST BE
CONNECTED TO SAME NETS
AS PARTNER PINS

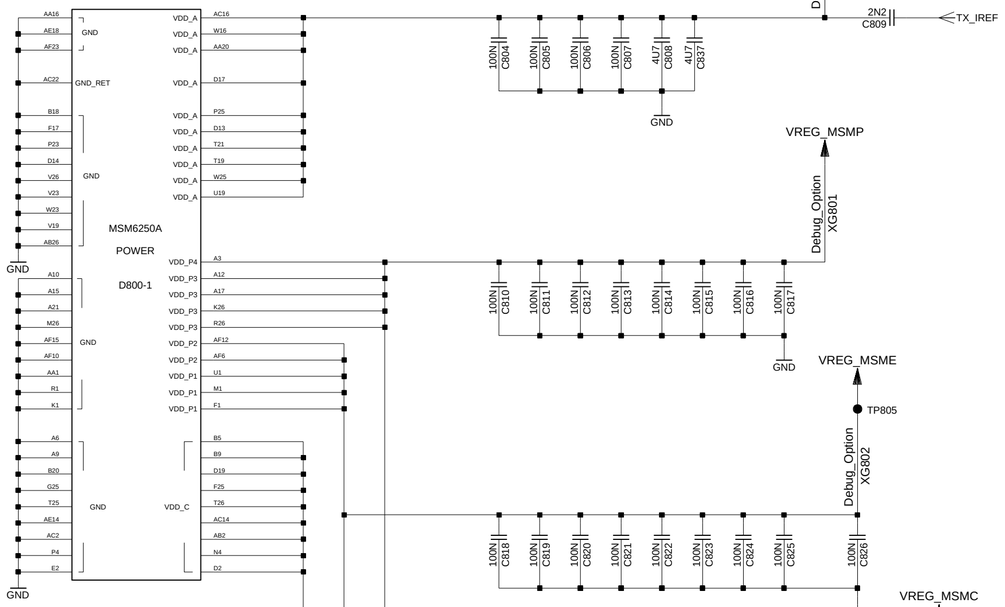

MSM6250 POWER

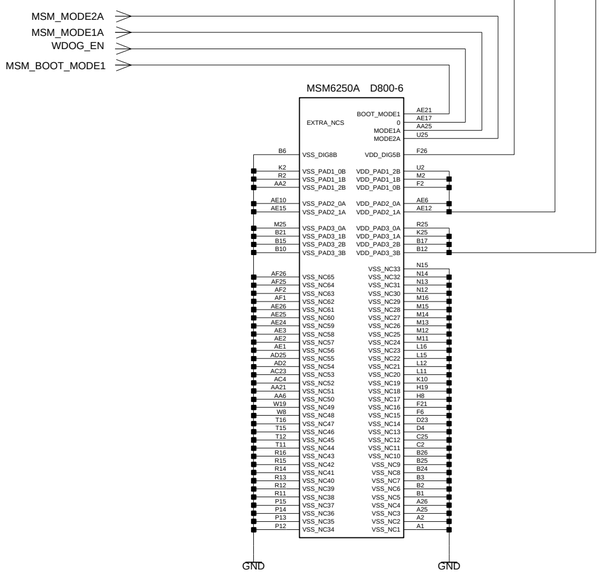

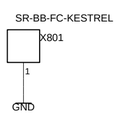

KESTREL MAIN -MSM6250

				DATE	25.05.2005
				USER	Milakovic
				APPR'D	
4	35317	13.01.2006	SD	PHE RD HW LPDM	
3	35059	09.01.2006	Mil	BENQ mobile	
2	34702	19.12.2005	Mil		
1	34341	08.12.2005	Mil		
VERS.	CHANGE NUMBER	DATE	NAME	(Created by BOM number: A5B00900206072-35317)	

EF81 MAINBOARD
ASSEM B2+.4 (Q2640-A5)
TOP HIERARCHY LEVEL
SCHEMATIC

1:1

241793

sheet8

Propietary data, Company confidential.
all rights reserved

Als Betriebsgeheimnis anvertraut
alle Rechte vorbehalten

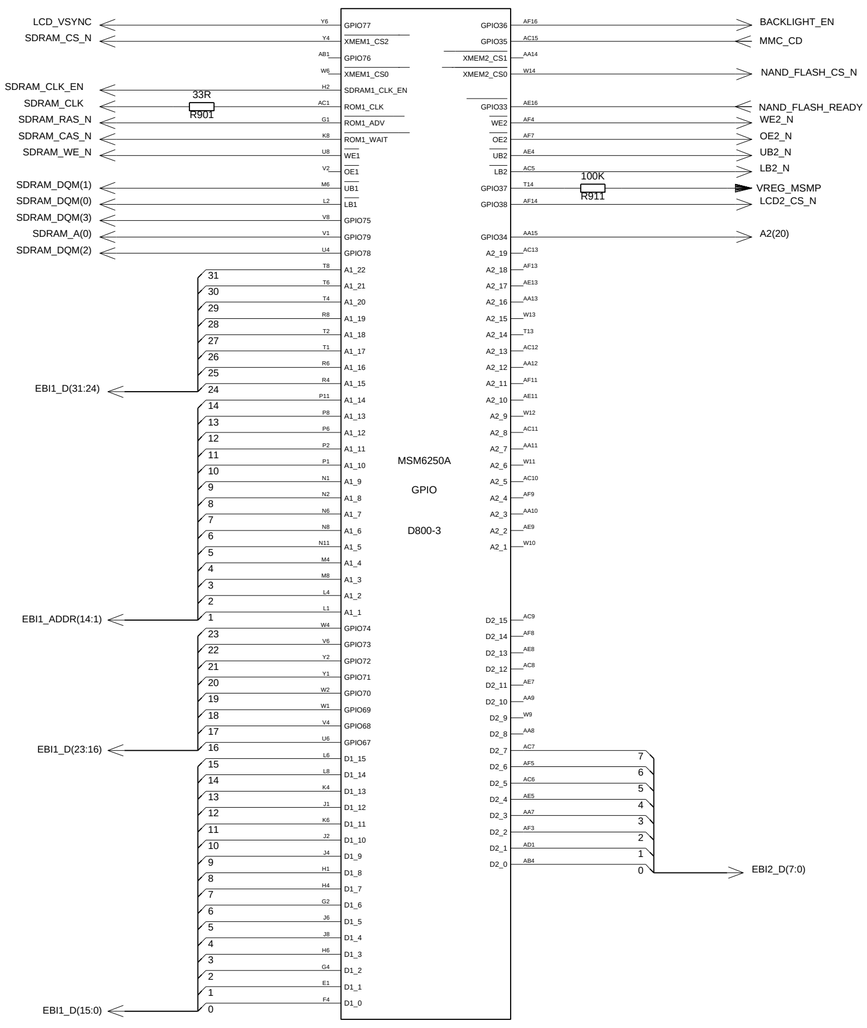

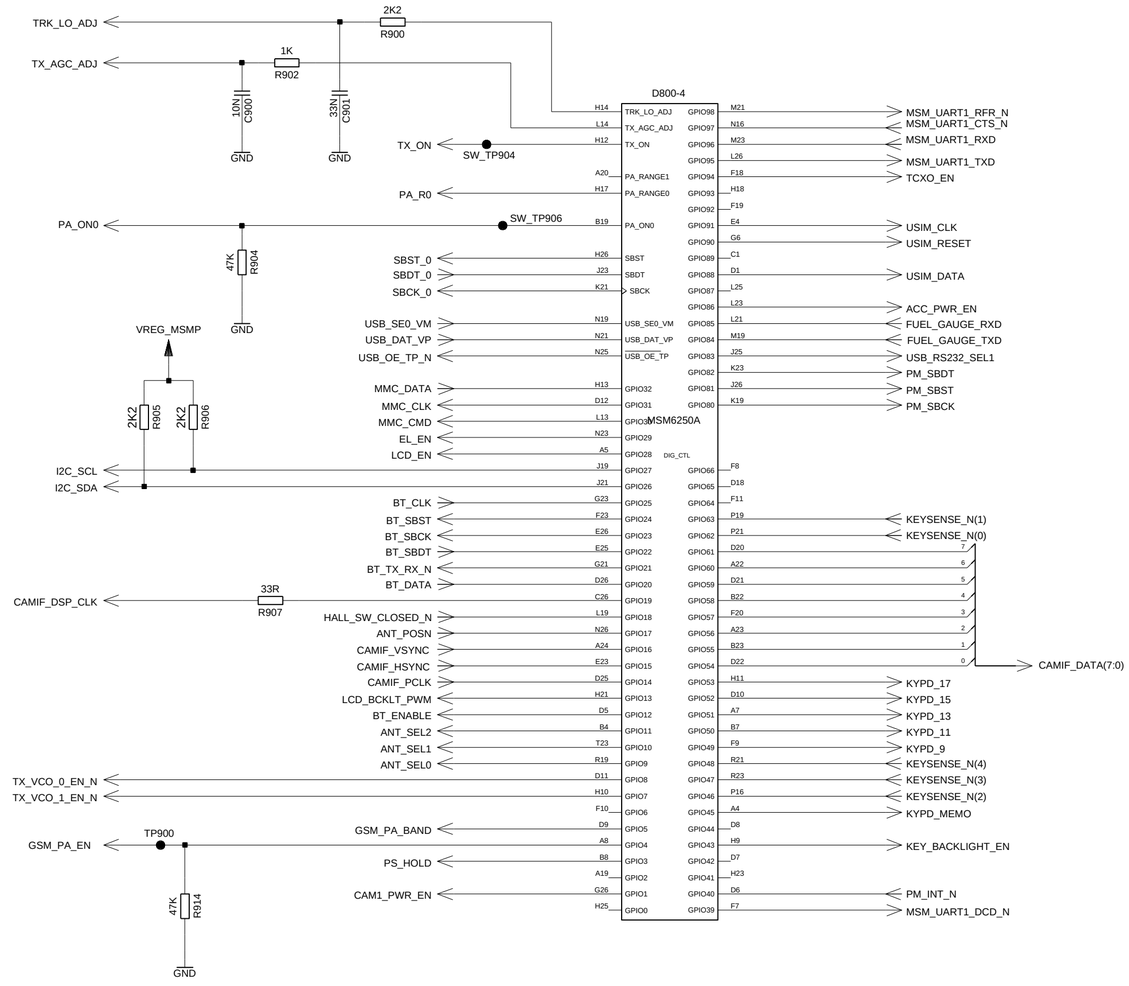

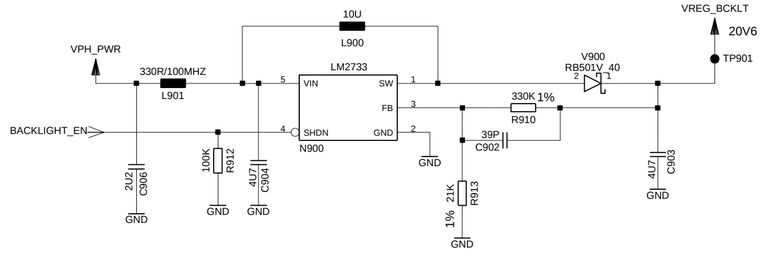

KESTREL MAIN - GENERAL PURPOSE IO

VERS.	CHANGE NUMBER	DATE	NAME		
				DATE	25.05.2005
				USER	Milakovic
				APPR'D	
4	35317	13.01.2006	SD	PHE RD HW LPDM	
3	35059	09.01.2006	Mil	BENQ mobile	
2	34702	19.12.2005	Mil		
1	34341	08.12.2005	Mil		

EF81 MAINBOARD
ASSEM B2+.4 (Q2640-A5)
TOP HIERARCHY LEVEL
SCHEMATIC

1:1

241793

sheet9

(Created by BOM number: A5B00900206072-35317)

Propietary data, Company confidential.
all rights reserved

Als Betriebsgeheimnis anvertraut
alle Rechte vorbehalten

NAND FLASH

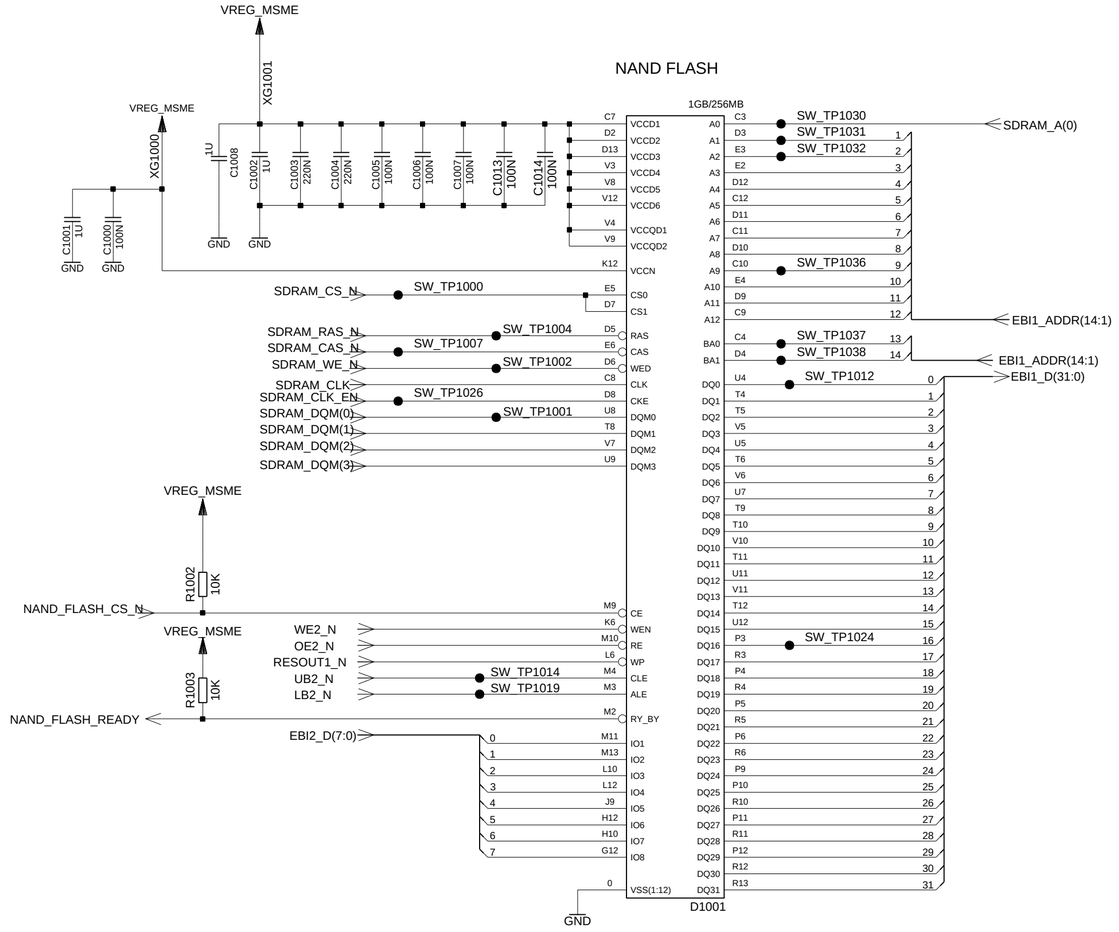

19.2MHz VCTCXO

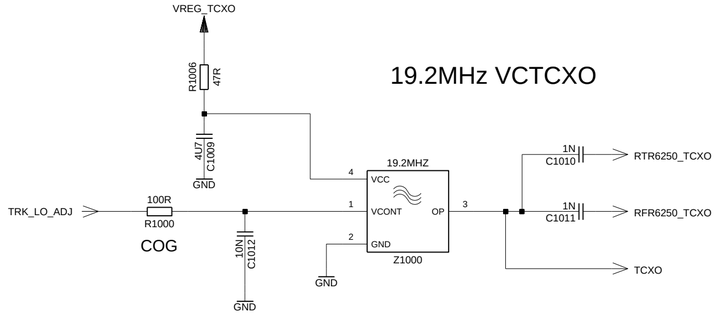

KESTREL MAIN - MEMORY

VERS.	CHANGE NUMBER	DATE	NAME		
				DATE	25.05.2005
				USER	Milakovic
				APPR'D	
4	35317	13.01.2006	SD	PHE RD HW LPDM	
3	35059	09.01.2006	Mil	BENQ mobile	
2	34702	19.12.2005	Mil		
1	34341	08.12.2005	Mil		

EF81 MAINBOARD
ASSEM B2+.4 (Q2640-A5)
TOP HIERARCHY LEVEL
SCHEMATIC

1:1

241793

sheet10

(Created by BOM number: A5B00900206072-35317)

Propietary data, Company confidential.
all rights reserved

Als Betriebsgeheimnis anvertraut
alle Rechte vorbehalten

UNREGULATED CHARGING

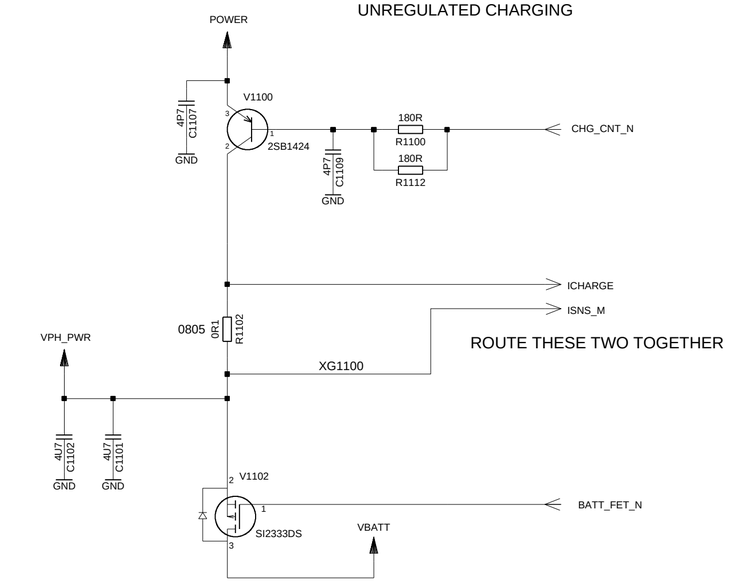

BATTERY CONTACTS AND HKADC SIGNAL CONDITIONING

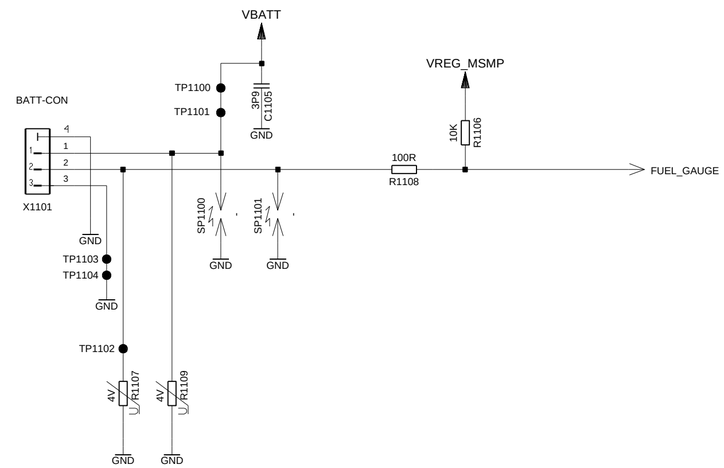

EXTERNAL ACCESSORY SUPPLY

1%

1%

KESTRELMAIN - BATT CHARGER / PHONE PWR

VERS.	CHANGE NUMBER	DATE	NAME		
				DATE	25.05.2005
				USER	Milakovic
				APPR'D	
4	35317	13.01.2006	SD	PHE RD HW LPDM	
3	35059	09.01.2006	Mil		
2	34702	19.12.2005	Mil	BENQ mobile	
1	34341	08.12.2005	Mil		

EF81 MAINBOARD
ASSEM B2+.4 (Q2640-A5)
TOP HIERARCHY LEVEL
SCHEMATIC

1:1

241793

sheet11

(Created by BOM number: A5B00900206072-35317)

Propietary data, Company confidential.
all rights reserved

Als Betriebsgeheimnis anvertraut
alle Rechte vorbehalten

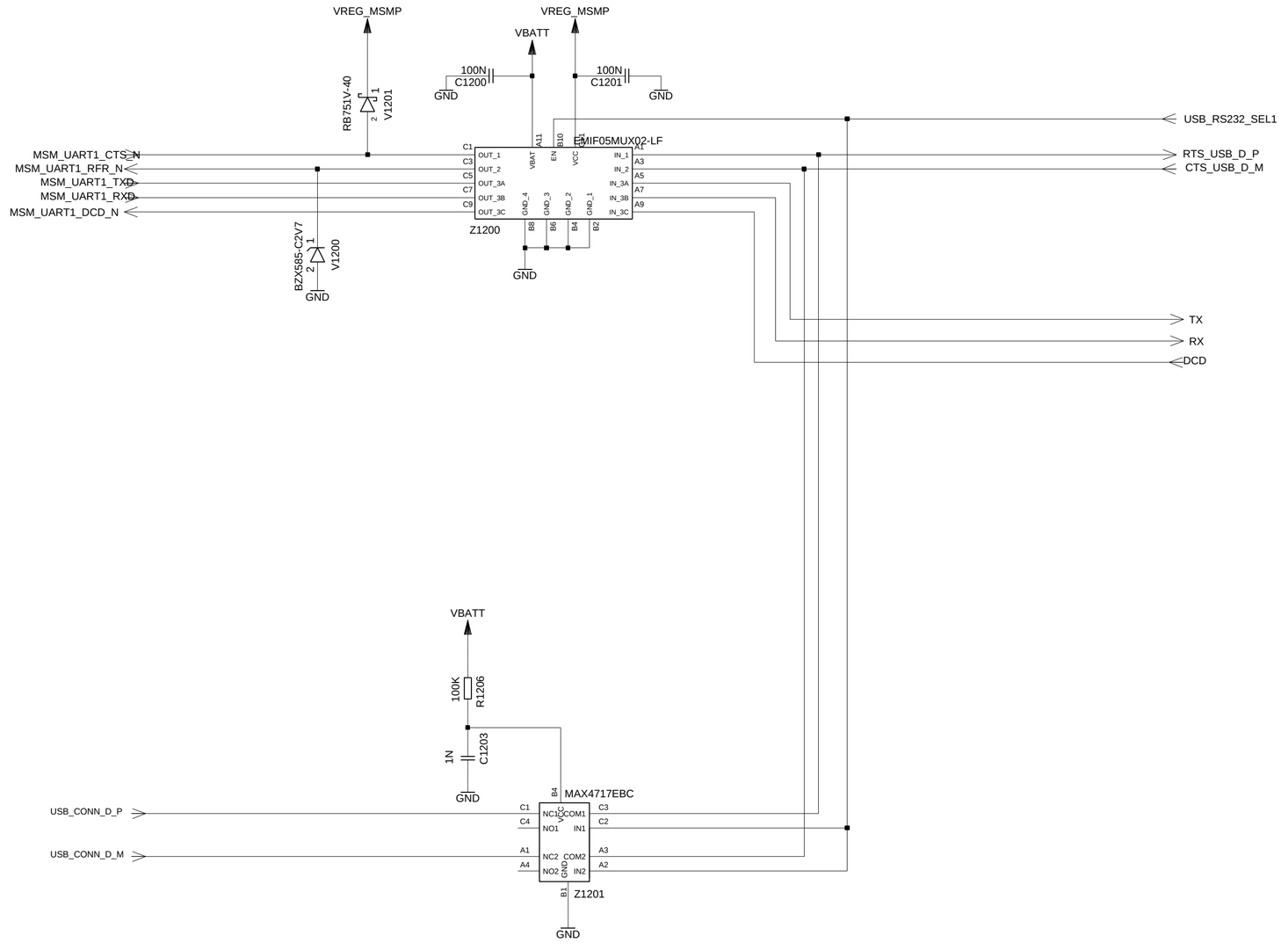

KESTREL MAIN - USB/RS232 MULTIPLEX

VERS.	CHANGE NUMBER	DATE	NAME		
				DATE	25.05.2005
				USER	Milakovic
				APPR'D	
4	35317	13.01.2006	SD	PHE RD HW LPDM	
3	35059	09.01.2006	Mil	BENQ mobile	
2	34702	19.12.2005	Mil		
1	34341	08.12.2005	Mil		

EF81 MAINBOARD
ASSEM B2+.4 (Q2640-A5)
TOP HIERARCHY LEVEL
SCHEMATIC

1:1

241793

sheet12

(Created by BOM number: A5B00900206072-35317)

Propietary data, Company confidential.
all rights reserved

Als Betriebsgeheimnis anvertraut
alle Rechte vorbehalten

NET	VOLTAGE
VREG_MSMC	1V3
VREG_MSME	1V85
VREG_USB	3V30
VREG_AUX1	2V85
VREG_AUX2	2V85
VREG_UIM	3V00
VREG_MSMP	2V60
VREG_MSMA	2V60
VREG_RFRX_1	2V85
VREG_RFRX_0	2V85
VREG_RFTX	2V85
VREG_SYNTH	2V85
VREG_TCXO	2V85
VREG_BCKLT	20V6
VREG_EL	2V9
VREG_LCD	2V9
POWER	2V70

KESTREL MAIN - POWER MANAGEMENT

VERS.	CHANGE NUMBER	DATE	NAME		
4	35317	13.01.2006	SD	PHE RD HW LPDM	
3	35059	09.01.2006	Mil		
2	34702	19.12.2005	Mil	BENQ mobile	241793
1	34341	08.12.2005	Mil		

DATE 25.05.2005
USER Milakovic
APPR'D

EF81 MAINBOARD
ASSEM B2+.4 (Q2640-A5)
TOP HIERARCHY LEVEL
SCHEMATIC

1:1

sheet13

(Created by BOM number: A5B00900206072-35317)

Propietary data, Company confidential.
all rights reserved

Als Betriebsgeheimnis anvertraut
alle Rechte vorbehalten

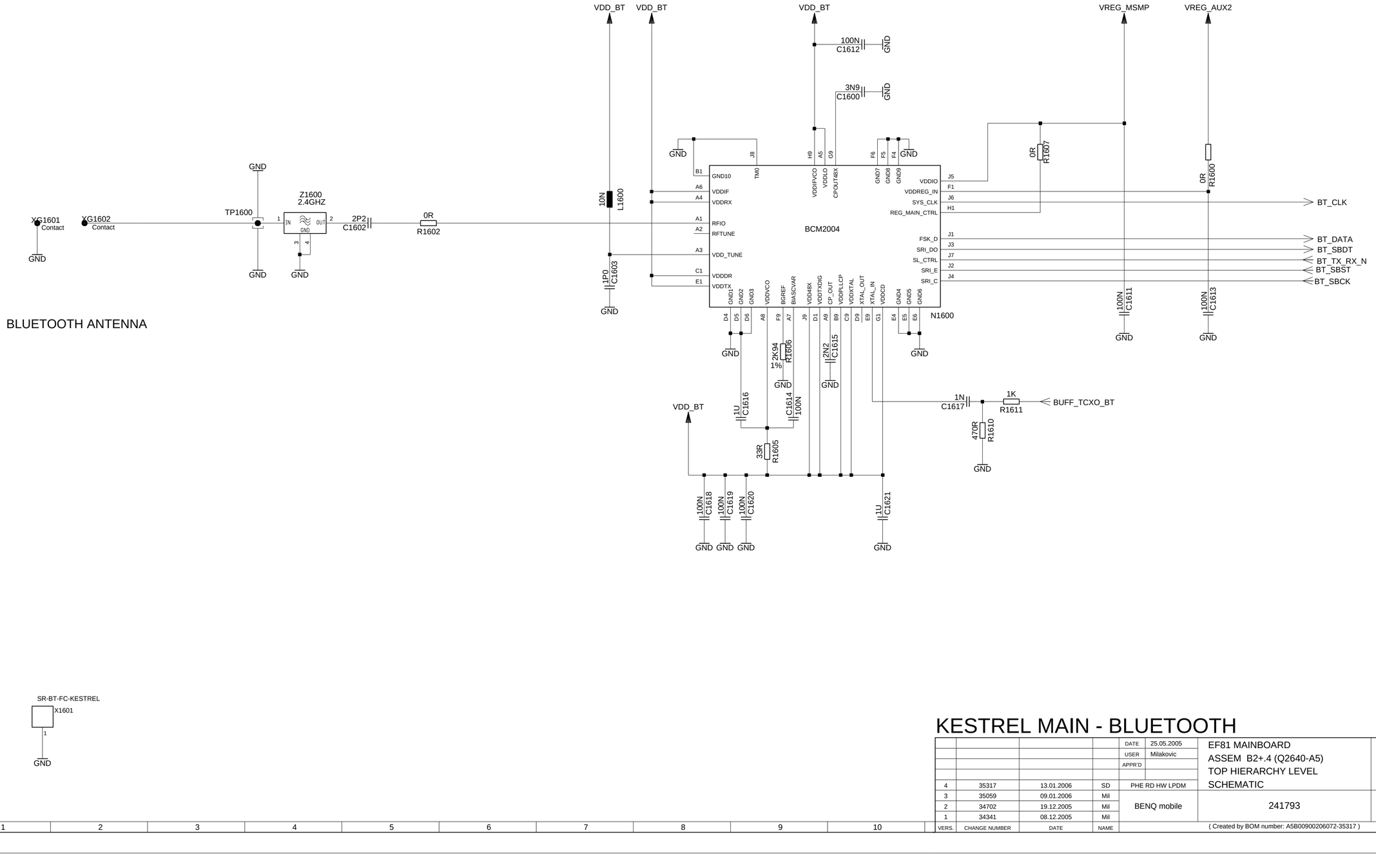

KESTREL MAIN - BLUETOOTH

VERS.	CHANGE NUMBER	DATE	NAME		
				DATE	25.05.2005
				USER	Milakovic
				APPR'D	
4	35317	13.01.2006	SD	PHE RD HW LPDM	
3	35059	09.01.2006	Mil	BENQ mobile	
2	34702	19.12.2005	Mil		
1	34341	08.12.2005	Mil		

EF81 MAINBOARD
ASSEM B2+.4 (Q2640-A5)
TOP HIERARCHY LEVEL
SCHEMATIC

241793

1:1

sheet16

(Created by BOM number: A5B00900206072-35317)

Propietary data, Company confidential.
all rights reserved

Als Betriebsgeheimnis anvertraut
alle Rechte vorbehalten

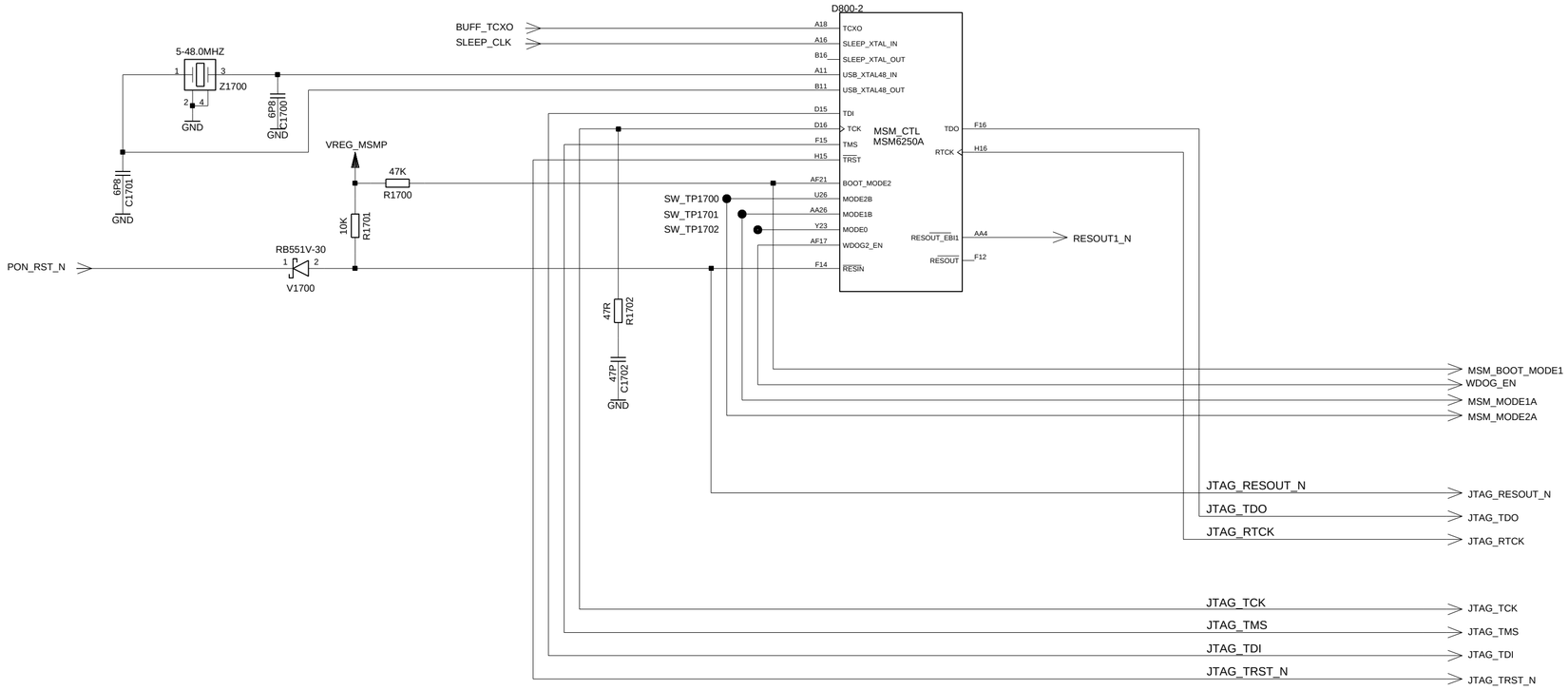

KESTREL MAIN - JTAG/MODE SELECT

VERS.	CHANGE NUMBER	DATE	NAME
4	35317	13.01.2006	SD
3	35059	09.01.2006	Mil
2	34702	19.12.2005	Mil
1	34341	08.12.2005	Mil

PHE RD HW LPDM

BENQ mobile

(Created by BOM number: A5B00900206072-35317)

DATE	25.05.2005
USER	Milakovic
APPR'D	

EF81 MAINBOARD
ASSEM B2+.4 (Q2640-A5)
TOP HIERARCHY LEVEL
SCHEMATIC

1:1

241793

sheet17

Propietary data, Company confidential.
all rights reserved

Als Betriebsgeheimnis anvertraut
alle Rechte vorbehalten

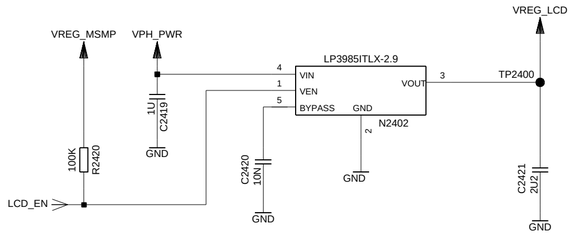

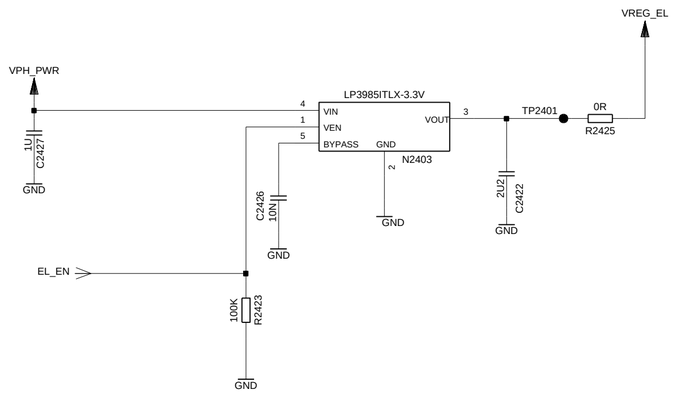

KESTREL MAIN - CAMERA INTERFACES

				DATE	25.05.2005
				USER	Milakovic
				APPR'D	
4	35317	13.01.2006	SD	PHE RD HW LPDM	
3	35059	09.01.2006	Mil	BENQ mobile	
2	34702	19.12.2005	Mil		
1	34341	08.12.2005	Mil		
VERS.	CHANGE NUMBER	DATE	NAME	(Created by BOM number: A5B00900206072-35317)	

EF81 MAINBOARD
ASSEM B2+.4 (Q2640-A5)
TOP HIERARCHY LEVEL
SCHEMATIC

1:1

241793

sheet19

Propietary data, Company confidential.
all rights reserved

Als Betriebsgeheimnis anvertraut
alle Rechte vorbehalten

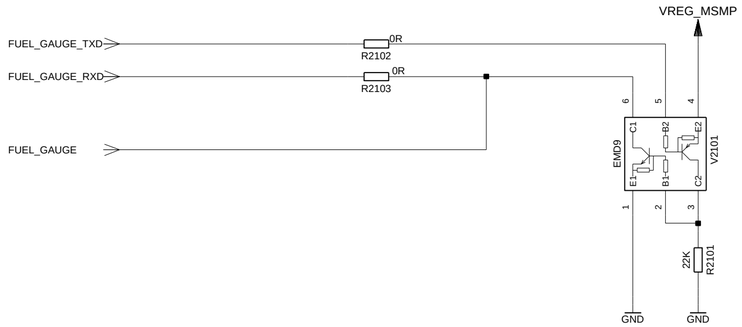

KESTREL MAIN - FUEL GAUGE

				DATE	25.05.2005
				USER	Milakovic
				APPR'D	
4	35317	13.01.2006	SD	PHE RD HW LPDM	
3	35059	09.01.2006	Mil	BENQ mobile	
2	34702	19.12.2005	Mil		
1	34341	08.12.2005	Mil		
VERS.	CHANGE NUMBER	DATE	NAME	(Created by BOM number: A5B00900206072-35317)	

EF81 MAINBOARD
ASSEM B2+.4 (Q2640-A5)
TOP HIERARCHY LEVEL
SCHEMATIC

1:1

241793

sheet21

Propietary data, Company confidential.
all rights reserved

Als Betriebsgeheimnis anvertraut
alle Rechte vorbehalten

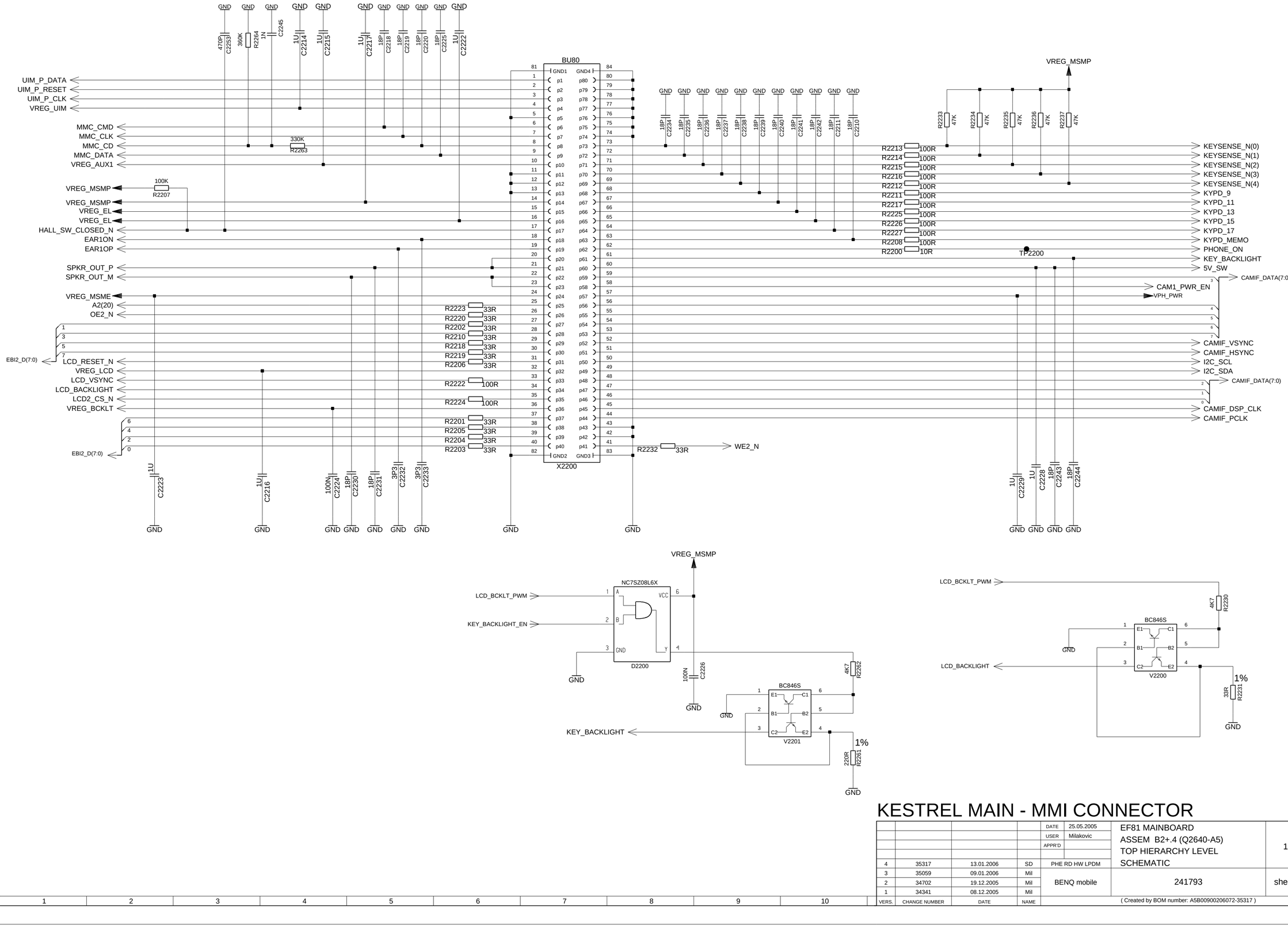

KESTREL MAIN - MMI CONNECTOR

VERS.	CHANGE NUMBER	DATE	NAME		
				DATE	25.05.2005
				USER	Milakovic
				APPR'D	
4	35317	13.01.2006	SD	PHE RD HW LPDM	
3	35059	09.01.2006	Mil	BENQ mobile	
2	34702	19.12.2005	Mil		
1	34341	08.12.2005	Mil		

EF81 MAINBOARD
ASSEM B2+.4 (Q2640-A5)
TOP HIERARCHY LEVEL
SCHEMATIC

241793

1:1

sheet22

(Created by BOM number: A5B00900206072-35317)

PROPRIETARY DATA, COMPANY CONFIDENTIAL
ALL RIGHTS RESERVED

C301	8B	C817	8C	C1306	7B	C1618	7D	R703	6C	R1611	7C	V1102	8B
C530	8C	C818	6B	C1307	8A	C1619	7D	R704	6C	R1700	7B	V1301	8B
C531	8C	C819	6B	C1308	8B	C1620	7C	R712	6C	R1701	7B	V1302	7B
C701	6B	C820	6C	C1309	7B	C1621	7C	R713	6C	R1702	8C	V1700	7B
C703	7B	C821	6C	C1310	7A	C1700	7B	R714	7C	R1703	7B	V2101	6B
C704	6C	C822	7B	C1311	7B	C1701	7B	R718	6C	R1710	8C	V2200	8D
C705	6C	C823	7B	C1314	7B	C1702	8C	R719	6C	R1711	8C	V2201	8D
C706	7B	C824	7B	C1315	7B	C2215	8D	R721	6C	R2101	6B	X100	5D
C709	6C	C825	7B	C1316	7B	C2216	8D	R722	6C	R2102	7B	X801	6A
C711	6B	C826	7B	C1317	7B	C2217	8D	R723	6C	R2103	7B	X1601	7D
C712	6B	C827	8B	C1318	7B	C2222	8D	R724	6C	R2201	8D	Z1300	8B
C713	6B	C828	7B	C1320	8B	C2223	8D	R730	6B	R2202	8D	Z1600	7D
C715	6C	C829	7C	C1321	8B	C2224	8D	R731	6B	R2203	8D	Z1700	7B
C717	6C	C830	7C	C1322	8B	C2226	8C	R737	6B	R2204	8D		
C718	6C	C831	7C	C1323	8B	C2229	8D	R741	7C	R2205	8D		
C720	7C	C832	8B	C1324	8B	C2230	9C	R900	7C	R2206	8D		
C721	6C	C833	7B	C1325	8B	C2231	9C	R901	7B	R2207	8C		
C722	7B	C834	7B	C1326	7B	C2232	7C	R902	8C	R2210	8D		
C723	7B	C835	7B	C1327	7B	C2233	7C	R904	8C	R2212	7C		
C724	7C	C836	8C	C1328	7B	C2253	8D	R907	7C	R2213	7C		
C725	6C	C837	7C	C1329	8B	C2419	9C	R911	7B	R2214	7C		
C728	6C	C900	8C	C1330	7B	C2420	9C	R914	8B	R2215	7C		
C729	6C	C901	7C	C1331	8B	C2421	9C	R1002	9C	R2216	7C		
C736	6C	C1000	8C	C1332	7C	C2422	8C	R1003	9C	R2218	8D		
C737	6C	C1001	8C	C1333	7C	C2426	8C	R1106	7B	R2219	8D		
C738	6B	C1002	8C	C1334	7B	C2427	8C	R1108	7B	R2220	8D		
C739	6B	C1003	9C	C1335	8B	D800	7B	R1300	8A	R2222	8D		
C740	6B	C1004	9C	C1336	8B	D1001	8C	R1301	8A	R2223	8D		
C742	6B	C1005	8C	C1337	7B	D1300	7C	R1302	7A	R2224	8D		
C804	7B	C1006	8C	C1338	9B	D1301	7B	R1303	8B	R2230	8C		
C805	7C	C1007	9B	C1339	8B	D2200	8C	R1306	7B	R2231	8D		
C806	6C	C1008	8B	C1346	7C	L1301	8B	R1310	7C	R2232	8D		
C807	6C	C1013	9B	C1600	7C	L1302	8B	R1311	7D	R2233	7C		
C808	7B	C1014	9B	C1602	7D	L1303	8B	R1312	8B	R2234	7C		
C809	8C	C1101	8B	C1603	7D	L1304	8B	R1313	7C	R2235	7C		
C810	7C	C1102	8B	C1611	7D	L1305	8B	R1314	7B	R2236	7C		
C811	8C	C1300	8B	C1612	7D	L1600	7D	R1600	7D	R2237	7C		
C812	8C	C1301	8B	C1613	7D	N700	6B	R1602	7D	R2261	8D		
C813	7C	C1302	7B	C1614	7D	N1300	7B	R1605	7D	R2262	8D		
C814	7C	C1303	8A	C1615	7C	N1600	7D	R1606	7C	R2420	8C		
C815	7C	C1304	8B	C1616	7D	N2402	8C	R1607	7D	R2423	8C		
C816	8C	C1305	7B	C1617	7C	N2403	8C	R1610	7C	R2425	8C		

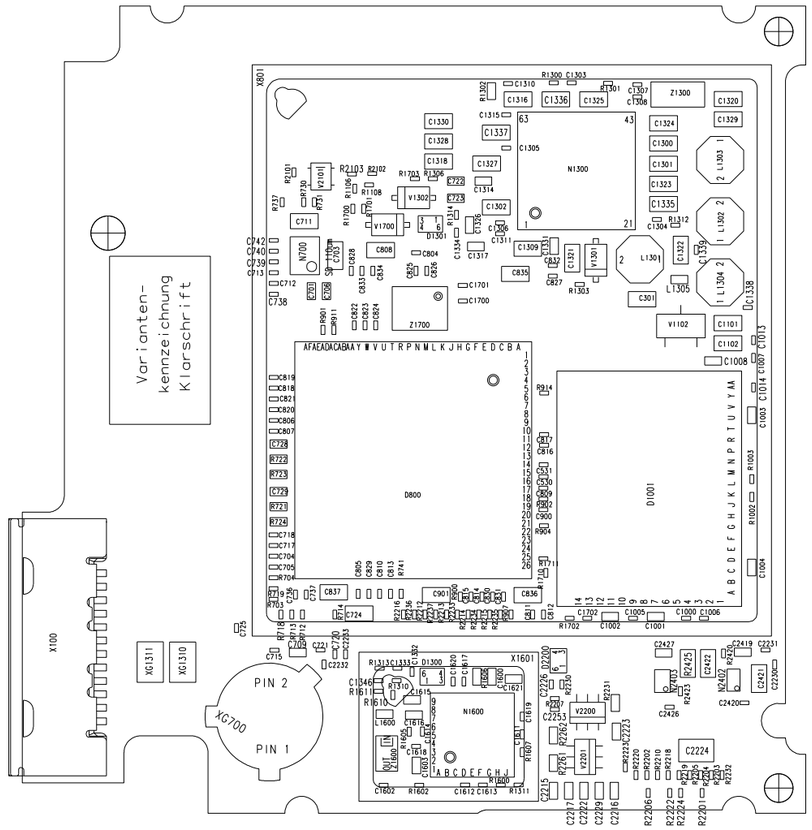
X801
X100
XG1311
XG1310
XG700
PIN 2
PIN 1
N1300
N700
N1600
D800
D1001
D1300
X1601
Z1300
Z1700
V1102
L1301
L1303
L1304
L1305
V2200
C1300
C1305
C1336
C1337
C1316
C1325
C1320
C1329
C1324
C1323
C1335
C1101
C1102
C1008
C1004
C1000
C1001
C1002
C1702
R1702
C1600
C1602
C1612
C1613
R1311
R1600
C2224
C2426
C2420
C2419
C2231
C2427
C2425
C2422
C2421
C2230
C2226
C2207
C2263
C2253
C2223
C2220
C2218
C2219
C2217
C2222
C2299
C2216
R2206
R2222
R2264
R2201
R2232
R2203
R2202
R2220
R2218
R2219
R2235
R2234
R2233
R2236
R2237
R2262
R2261
R2207
R2263
R2253
R2223
R2215
R2216
R2214
R2213
R2212
R2210
R2204
R2205
R2230
R2231
R2201
R1003
R1002
R914
R904
R900
R911
R901
R907
R902
R1106
R1108
R1106
R1107
R1105
R1104
R1103
R1102
R1101
R1100
R1300
R1303
R1301
R1302
R1306
R1310
R1312
R1313
R1314
R1610
R1611
R1605
R1606
R1607
R1602
R1605
R1600
R1617
R1618
R1619
R1620
R1621
R1615
R1614
R1612
R1613
R1311
R1312
R1313
R1314
R1610
R1611
R1605
R1606
R1607
R1602

PROPRIETARY DATA, COMPANY CONFIDENTIAL
ALL RIGHTS RESERVED

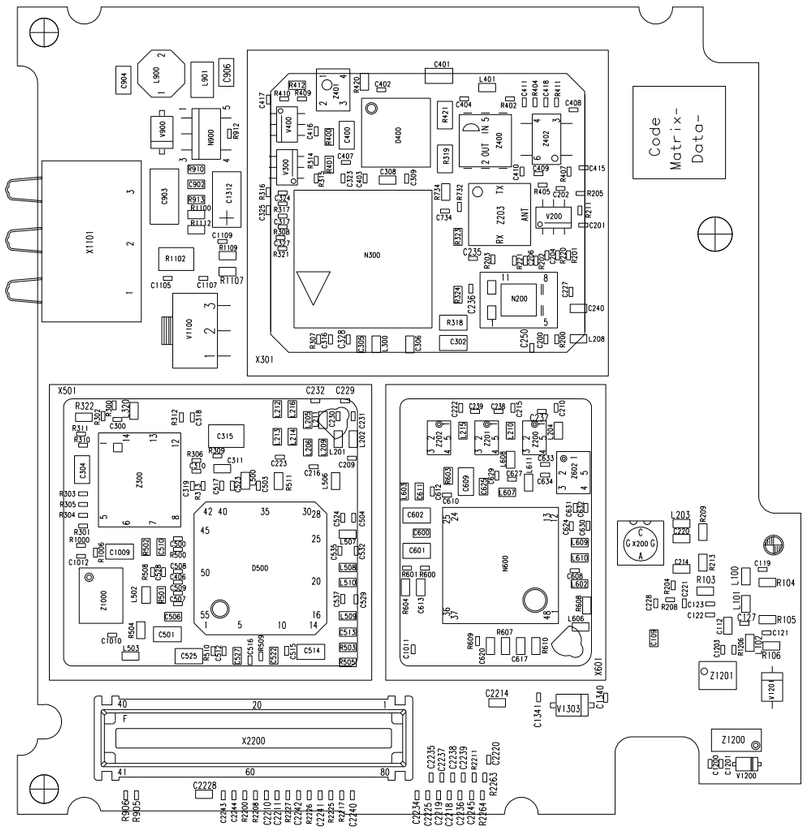

C109	5C	C317	3B	C532	3C	C2219	4D	L509	3C	R313	3C	R910	3B	Z1201	5C				
C112	5C	C318	3C	C535	3C	C2220	4D	L510	3C	R314	3B	R912	3B						
C119	5C	C319	3C	C537	3C	C2225	4D	L602	4C	R315	3B	R913	3B						
C121	5C	C323	3B	C600	4C	C2228	3D	L603	4C	R316	3B	R1000	2C						
C122	5C	C324	3B	C601	4C	C2234	4D	L606	4C	R317	3B	R1006	2C						
C123	5C	C325	3B	C602	4C	C2235	4D	L607	4C	R318	4B	R1100	3B						
C127	5C	C327	3B	C608	4C	C2236	4D	L608	4C	R319	4B	R1102	2B						
C200	4B	C328	3B	C609	4C	C2237	4D	L609	4C	R321	3B	R1107	3B						
C201	4B	C400	3B	C610	4C	C2238	4D	L610	4C	R322	2C	R1109	3B						
C202	4B	C401	4A	C611	4C	C2239	4D	L611	4C	R323	4B	R1112	3B						
C204	4B	C402	3B	C612	4C	C2240	3D	L900	2B	R324	4B	R1206	5C						
C206	4B	C403	3B	C613	4C	C2241	3D	L901	3B	R400	3B	R2200	3D						
C209	3C	C404	4B	C617	4C	C2242	3D	N200	4B	R401	3B	R2208	3D						
C210	4C	C406	2C	C620	4C	C2243	3D	N300	3B	R402	4B	R2211	4D						
C214	5C	C407	3B	C624	4C	C2244	3D	N600	4C	R404	4B	R2217	3D						
C215	4C	C408	4B	C625	4C	C2245	4D	N900	3B	R405	4B	R2225	3D						
C216	3C	C409	4B	C627	4C	D400	3B	R103	5C	R407	4B	R2226	3D						
C220	5C	C410	4B	C629	4C	D500	3C	R104	5C	R409	3B	R2227	3D						
C221	5C	C411	4B	C630	4C	L100	5C	R105	5C	R410	3B	R2263	4D						
C222	4C	C415	4B	C631	4C	L101	5C	R106	5C	R411	4B	R2264	4D						
C223	3C	C416	3B	C632	4C	L102	5C	R200	4B	R412	3A	V200	4B						
C227	4B	C417	3B	C633	4C	L201	3C	R201	4B	R420	3B	V300	3B						
C228	5C	C418	4B	C634	4C	L202	3C	R202	4B	R421	4B	V400	3B						
C229	3C	C500	2C	C734	4B	L203	5C	R203	4B	R500	2C	V900	2B						
C230	3C	C501	2C	C902	3B	L204	4C	R204	5C	R501	2C	V1100	3B						
C231	3C	C503	3C	C903	2B	L205	3C	R205	4B	R502	2C	V1200	5D						
C232	3C	C504	3C	C904	2B	L206	3C	R208	5C	R503	3C	V1201	5C						
C235	4B	C506	2C	C906	3A	L208	4B	R209	5C	R504	2C	V1303	4C						
C236	4B	C507	2C	C1009	2C	L209	3C	R211	4B	R505	3C	X200	5C						
C237	4C	C508	2C	C1010	2C	L210	4C	R213	5C	R508	2C	X301	3B						
C238	4C	C509	2C	C1011	4C	L211	3C	R220	4B	R509	3C	X501	3B						
C239	4C	C510	2C	C1012	2C	L212	3C	R221	4B	R510	3C	X601	4C						
C240	4B	C512	3C	C1105	2B	L213	3C	R300	2C	R511	3C	X1101	2B						
C250	4B	C513	3C	C1107	3B	L214	3C	R301	2C	R600	4C	X2200	3C						
C300	2C	C514	3C	C1109	3B	L215	4C	R302	2C	R601	4C	Z200	4C						
C302	4B	C515	3C	C1200	5D	L216	3C	R303	2C	R603	4C	Z201	4C						
C304	2C	C516	3C	C1201	5D	L300	3B	R304	2C	R604	4C	Z202	4C						
C305	3B	C517	3C	C1203	5C	L320	2C	R305	2C	R607	4C	Z203	4B						
C306	4B	C522	3C	C1312	3B	L401	4B	R306	3C	R608	4C	Z300	2C						
C308	3B	C523	3C	C1340	4C	L500	3C	R307	3B	R609	4C	Z400	4B						
C309	4B	C524	3C	C1341	4C	L502	2C	R308	3B	R610	4C	Z401	3A						
C310	3C	C525	2C	C2210	3D	L503	2C	R309	3C	R732	4B	Z402	4B						
C311	3C	C527	3C	C2211	3D	L506	3C	R310	2C	R734	4B	Z602	4C						
C315	3C	C528	2C	C2214	4C	L507	3C	R311	2C	R905	2D	Z1000	2C						
C316	3B	C529	3C	C2218	4D	L508	3C	R312	3C	R906	2D	Z1200	5D						

Achtung : Hoehenprofil C24___-___-___-__-42 (gilt nur fuer Entwicklung)
Liefervarianten siehe : V24851-Z2000-A1-*-35

				DATE	25.05.2005
				NAME	Milakovic
				APPR'D	
				STD	
4	35317	13.01.2006	SD	PHE RD HW LPDM	
3	35059	09.01.2006	Mil	BENQ mobile	
2	34702	19.12.2005	Mil		
1	34341	08.12.2005	Mil		
VERS.	CHANGE NUMBER	DATE	NAME	(Created by BOM number: A5B00900206072-35317)	

EF81 MAINBOARD
ASSEM B2+.4 (Q2640-A5)
WIRING DIAGRAMM (SOLDER SIDE 2)

3:1

241794

SHEET 2+

ALS BETRIEBSGEHEIMNIS ANVERTRAUT
ALLE RECHTE VORBEHALTEN

PROPRIETARY DATA, COMPANY CONFIDENTIAL
ALL RIGHTS RESERVED

ALS BETRIEBSGEHEIMNIS ANVERTRAUT
ALLE RECHTE VORBEHALTEN

TP706	7D	/EAR1OP
TP804	8A	VREG_MSMA
TP806	8A	VREG_MSMC
TP1300	8A	/SLEEP_CLK
TP1304	8A	VREG_SYNTH
TP1305	7A	VREG_TCXO
TP1307	6A	VREG_RFRX_0
TP1311	7A	/VREG_USB
TP1313	7A	VREG_MSMP
TP1600	6C	/N$405275
TP1701	7C	/JTAG_RESOUT_N
TP1702	6C	/JTAG_TDO
TP1703	6C	/JTAG_RTCK
TP1704	6D	/JTAG_TCK
TP1705	7D	/JTAG_TMS
TP1706	6D	/JTAG_TDI
TP1707	6C	/JTAG_TRST_N
TP1708	7A	/N$266703
TP1709	6C	/WDOG_EN
TP1710	7A	GND
TP2200	6A	/PHONE_ON
TP2400	8D	VREG_LCD
TP2401	8D	/N$403188
TP2402	8D	VPH_PWR

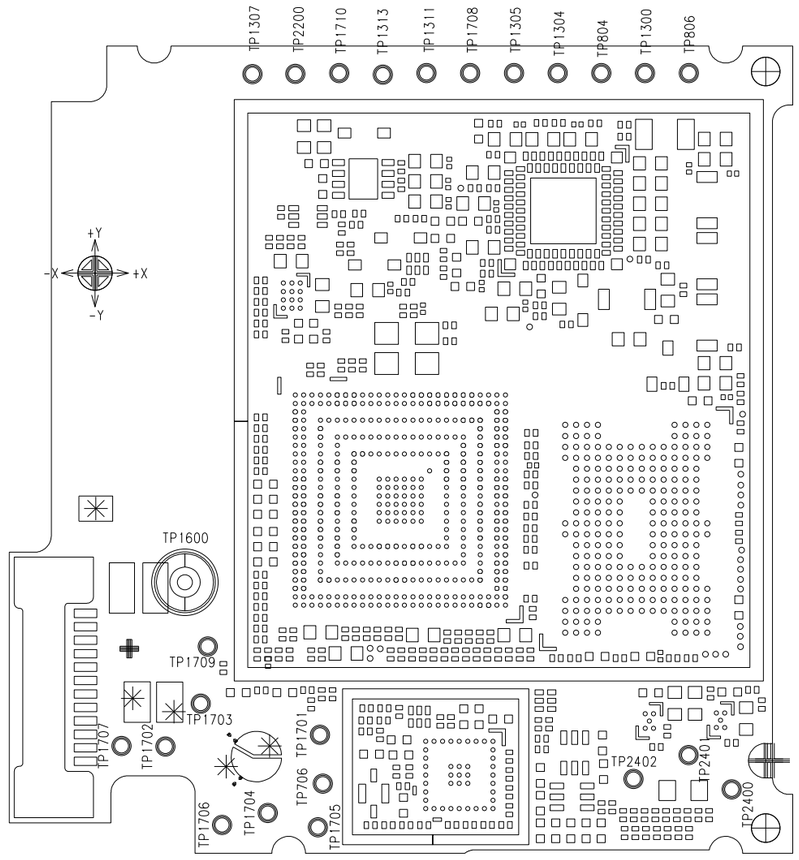

				DATE	25.05.2005	EF81 MAINBOARD ASSEM B2+ (Q2640-A5) TESTPOINT DIAGRAMM (SIDE 1)
				NAME	Milakovic	
				APPR'D		
				STD		
				PHE RD HW LPDM		
				BENQ mobile		241795
1	34341	08.12.2005	Mil	(Created by BOM number: A5B00900206072-34341)		
VERS.	CHANGE NUMBER	DATE	NAME			

3:1

SHEET 1+

PROPRIETARY DATA, COMPANY CONFIDENTIAL
ALL RIGHTS RESERVED

ALS BETRIEBSGEHEIMNIS ANVERTRAUT
ALLE RECHTE VORBEHALTEN

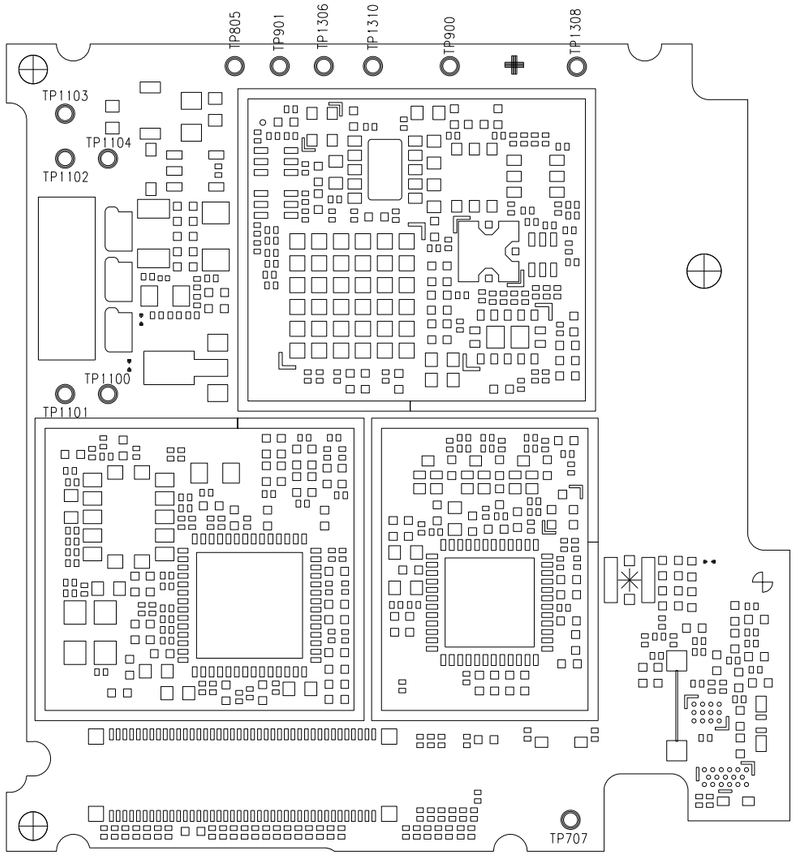

TP707	4D	/EAR10N
TP805	3A	VREG_MSME
TP900	4A	/GSM_PA_EN
TP901	3A	VREG_BCKLT
TP1100	2B	VBATT
TP1101	2B	VBATT
TP1102	2B	/N$410909
TP1103	2A	GND
TP1104	2B	GND
TP1306	3A	VREG_RFTX
TP1308	4A	VREG_RFRX_1
TP1310	3A	VREG_AUX2

				DATE	25.05.2005	EF81 MAINBOARD ASSEM B2+ (Q2640-A5) TESTPOINT DIAGRAMM (SIDE 2)
				NAME	Milakovic	
				APPR'D		
				STD		
				PHE RD HW LPDM		
				BENQ mobile		241795
1	34341	08.12.2005	Mil	(Created by BOM number: A5B00900206072-34341)		
VERS.	CHANGE NUMBER	DATE	NAME			

3:1

SHEET 2-

Proprietary data, company confidential.
All rights reserved

Als Betriebsgeheimnis anvertraut
Alle Rechte vorbehalten

1	2	3	4	5

HIERARCHY	SHEET	PDF-SHEET
A5B00900199863-33944	index	sheet 1
	netlist1	sheet 2
	poslist1	sheet 3
	sheet14	sheet 4
	sheet15	sheet 5
	sheet23	sheet 6

A

B

C

D

E

				DATE	10.10.2005	KESTREL CARD PCB B2+ LAYOUT V1 TOP HIERARCHY LEVEL SCHEMATIC	1:1
				USER	SCHUPFER		
				APPR'D			
				MD PD HW4 MCH1			
2	33944	23.11.2005	SD	BENQ mobile		226110	index
1	32424	10.10.2005	SD				
VERS.	CHANGE NUMBER	DATE	NAME	(Created by BOM number: A5B00900199864-33944)			

Proprietary data, company confidential.
All rights reserved

Als Betriebsgeheimnis anvertraut
Alle Rechte vorbehalten

1	2	3	4	5	

MMC_CD
/sheet14 9 C
/sheet23 4 C

MMC_CLK
/sheet14 9 C
/sheet23 4 C

MMC_CMD
/sheet14 9 C
/sheet23 4 C

MMC_DATA
/sheet14 9 C
/sheet23 4 C

UIM_P_CLK
/sheet15 9 C
/sheet23 4 B

UIM_P_DATA
/sheet15 9 C
/sheet23 4 B

UIM_P_RESET
/sheet15 9 C
/sheet23 4 B

VREG_AUX1
/sheet14 6 C
/sheet14 5 B
/sheet14 3 B
/sheet23 4 B

VREG_UIM
/sheet15 5 B
/sheet23 4 B

A B C D E

				DATE	10.10.2005	KESTREL CARD PCB B2+ LAYOUT V1 TOP HIERARCHY LEVEL SCHEMATIC	1:1
				USER	SCHUPFER		
				APPR'D			
				MD PD HW4 MCH1			
2	33944	23.11.2005	SD	BENQ mobile		226110	netlist1
1	32424	10.10.2005	SD				
VERS.	CHANGE NUMBER	DATE	NAME	(Created by BOM number: A5B00900199864-33944)			

Proprietary data, company confidential.
All rights reserved

Als Betriebsgeheimnis anvertraut
Alle Rechte vorbehalten

1	2	3	4	5	
					A
					B
					C
					D
					E

C1402 /sheet14 5 B
C1407 /sheet14 5 B
C1500 /sheet15 5 D
R1400 /sheet14 3 B
R1401 /sheet14 3 B
R1500 /sheet15 5 C
X1400 /sheet14 2 C
X1500 /sheet15 3 C
X2304 /sheet23 3 C
Z1400 /sheet14 8 C
Z1500 /sheet15 6 C

				DATE	10.10.2005	KESTREL CARD PCB B2+ LAYOUT V1 TOP HIERARCHY LEVEL SCHEMATIC	1:1
				USER	SCHUPFER		
				APPR'D			
				MD PD HW4 MCH1			
				BENQ mobile		226110	poslist1
2	33944	23.11.2005	SD				
1	32424	10.10.2005	SD				
VERS.	CHANGE NUMBER	DATE	NAME	(Created by BOM number: A5B00900199864-33944)			

Proprietary data, company confidential.
All rights reserved

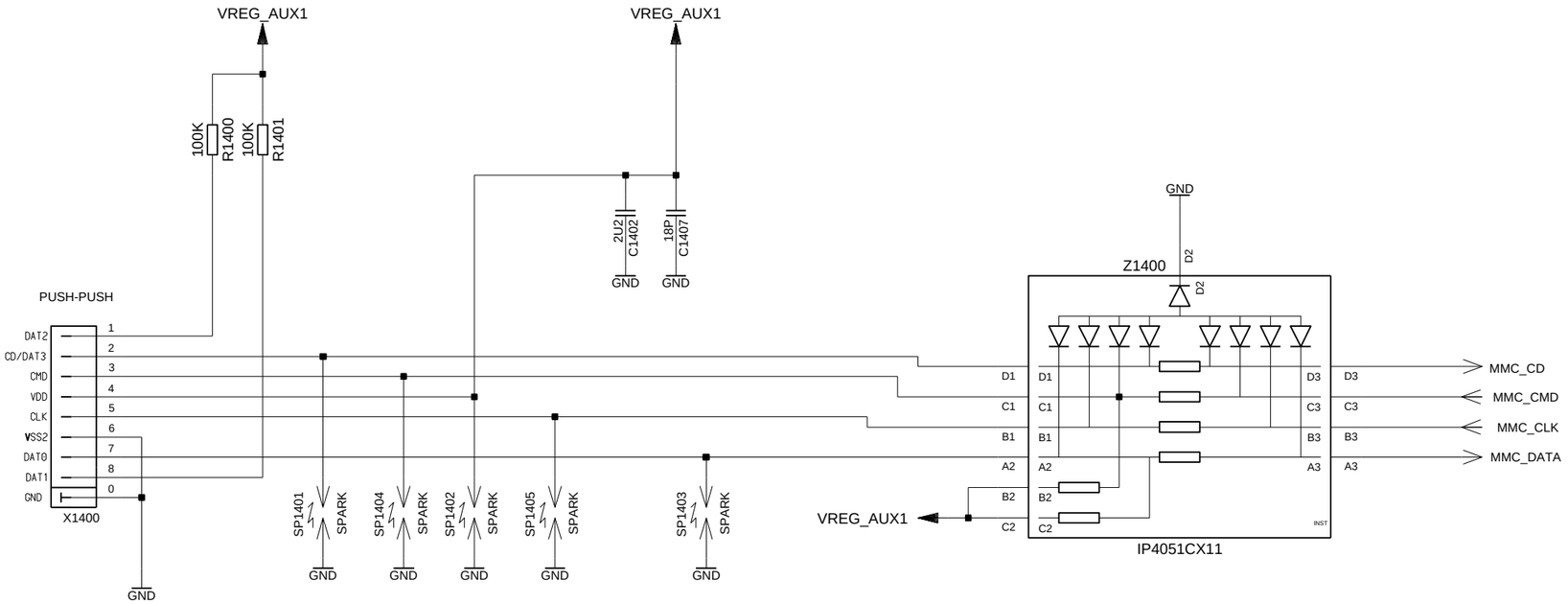

KESTREL CARD PCB - MULTIMEDIA CARD

VERS.	CHANGE NUMBER	DATE	NAME			
				DATE	10.10.2005	KESTREL CARD PCB B2+ LAYOUT V1 TOP HIERARCHY LEVEL SCHEMATIC
				USER	SCHUPFER	
				APPR'D		
				MD PD HW4 MCH1		
2	33944	23.11.2005	SD	BENQ mobile	226110	sheet14
1	32424	10.10.2005	SD			

1:1

(Created by BOM number: A5B00900199864-33944)

Als Betriebsgeheimnis anvertraut
Alle Rechte vorbehalten

Proprietary data, company confidential.
All rights reserved

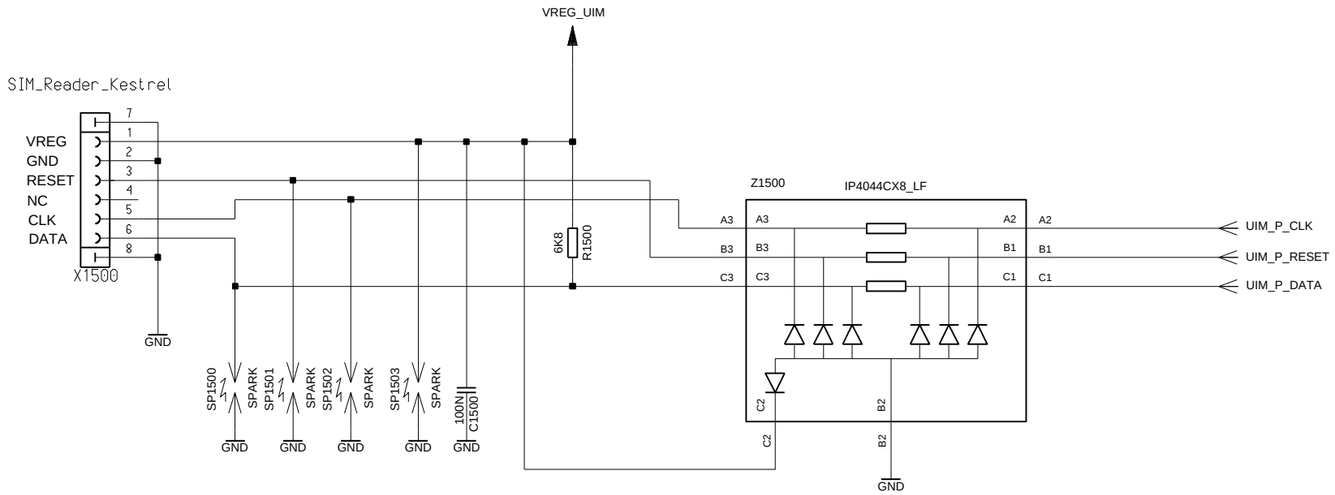

KESTREL CARD PCB - SIM CARD

VERS.	CHANGE NUMBER	DATE	NAME			
				DATE	10.10.2005	KESTREL CARD PCB B2+ LAYOUT V1 TOP HIERARCHY LEVEL SCHEMATIC	1:1
				USER	SCHUPFER		
				APPR'D			
				MD PD HW4 MCH1			
2	33944	23.11.2005	SD	BENQ mobile		226110	sheet15
1	32424	10.10.2005	SD				

(Created by BOM number: A5B00900199864-33944)

Als Betriebsgeheimnis anvertraut
Alle Rechte vorbehalten

Proprietary data, company confidential.
All rights reserved

Als Betriebsgeheimnis anvertraut
Alle Rechte vorbehalten

1	2	3	4	5

A B C D E

BOARD to BOARD CONNECTOR

Con_F2F_20pol

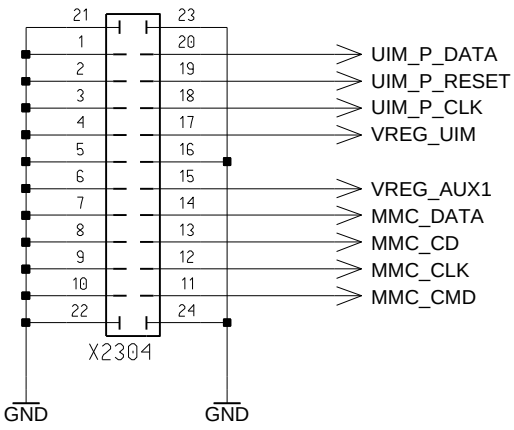

				DATE	10.10.2005	KESTREL CARD PCB B2+ LAYOUT V1 TOP HIERARCHY LEVEL SCHEMATIC	1:1
				USER	SCHUPFER		
				APPR'D			
				MD PD HW4 MCH1			
2	33944	23.11.2005	SD	BENQ mobile		226110	sheet23
1	32424	10.10.2005	SD				
VERS.	CHANGE NUMBER	DATE	NAME	(Created by BOM number: A5B00900199864-33944)			

PROPRIETARY DATA, COMPANY CONFIDENTIAL
ALL RIGHTS RESERVED

ALS BETRIEBSGEHEIMNIS ANVERTRAUT
ALLE RECHTE VORBEHALTEN

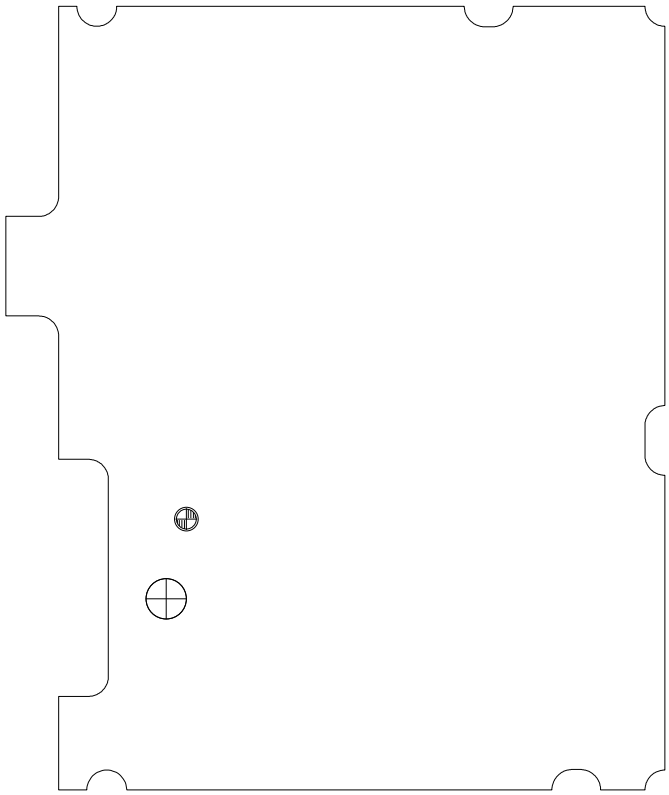

Achtung : Hoehenprofil C24___-___-___-__-42 (gilt nur fuer Entwicklung)
Liefervarianten siehe : V24851-Z2000-A1-*-35

				DATE	10.10.2005	KESTREL CARD PCB B2+ LAYOUT V1 WIRING DIAGRAMM (SOLDER SIDE 1)	3:1
				NAME	SCHUPFER		
				APPR'D			
				STD			
				MD PD HW4 MCH1			
							SHEET
2	33944	23.11.2005	SD	BENQ mobile		226111	1+
1	32424	10.10.2005	SD				
VERS.	CHANGE NUMBER	DATE	NAME	(Created by BOM number: A5B00900199864-33944)			

PROPRIETARY DATA, COMPANY CONFIDENTIAL
ALL RIGHTS RESERVED

ALS BETRIEBSGEHEIMNIS ANVERTRAUT
ALLE RECHTE VORBEHALTEN

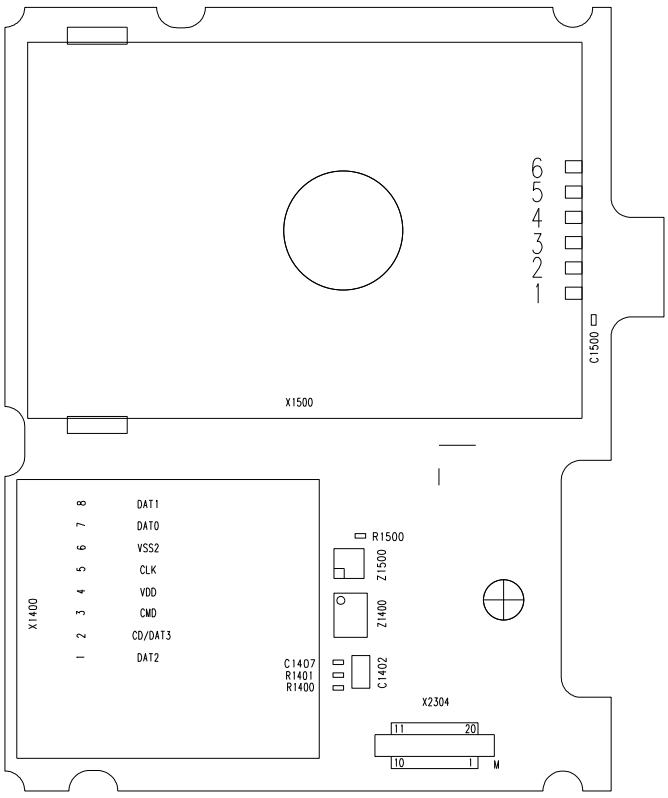

C1402	3C	X1500	4B
C1407	3C	X2304	4C
C1500	4B	Z1400	3C
R1400	3C	Z1500	3B
R1401	3C		
R1500	3B		
X1400	2C		

Achtung : Hoehenprofil C24___-___-___-__-42 (gilt nur fuer Entwicklung)
Liefervarianten siehe : V24851-Z2000-A1-*-35

				DATE	10.10.2005	KESTREL CARD PCB B2+ LAYOUT V1 WIRING DIAGRAMM (SOLDER SIDE 2)	3:1
				NAME	SCHUPFER		
				APPR'D			
				STD			
				MD PD HW4 MCH1			
							SHEET
2	33944	23.11.2005	SD	BENQ mobile		226111	2+
1	32424	10.10.2005	SD				
VERS.	CHANGE NUMBER	DATE	NAME	(Created by BOM number: A5B00900199864-33944)			

PROPRIETARY DATA, COMPANY CONFIDENTIAL
ALL RIGHTS RESERVED

ALS BETRIEBSGEHEIMNIS ANVERTRAUT
ALLE RECHTE VORBEHALTEN

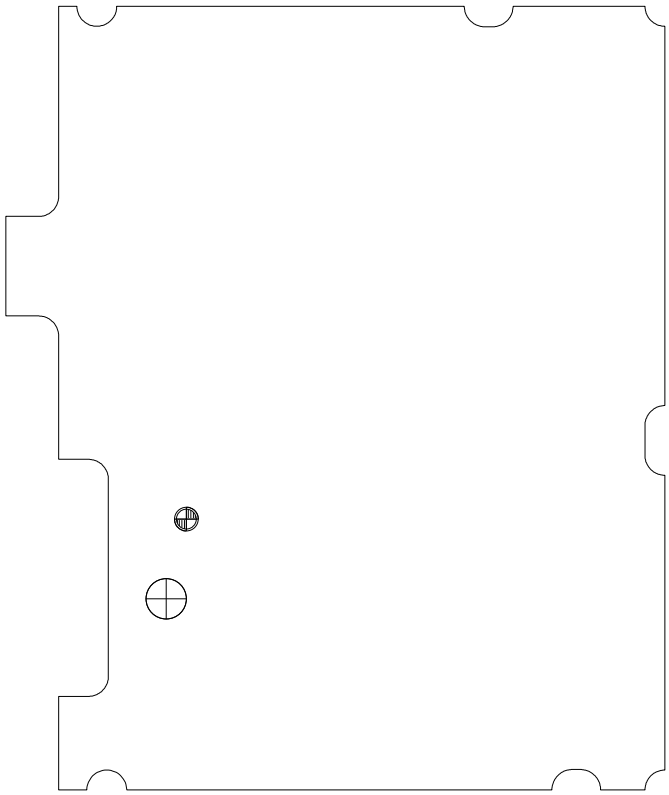

Achtung : Hoehenprofil C24___-___-___-__-42 (gilt nur fuer Entwicklung)
Liefervarianten siehe : V24851-Z2000-A1-*-35

				DATE	10.10.2005	KESTREL CARD PCB B2+ LAYOUT V1 WIRING DIAGRAMM (SOLDER SIDE 1)	3:1
				NAME	SCHUPFER		
				APPR'D			
				STD			
				MD PD HW4 MCH1			
							SHEET
2	33944	23.11.2005	SD	BENQ mobile		226111	3+
1	32424	10.10.2005	SD				
VERS.	CHANGE NUMBER	DATE	NAME	(Created by BOM number: A5B00900199864-33944)			

PROPRIETARY DATA, COMPANY CONFIDENTIAL
ALL RIGHTS RESERVED

ALS BETRIEBSGEHEIMNIS ANVERTRAUT
ALLE RECHTE VORBEHALTEN

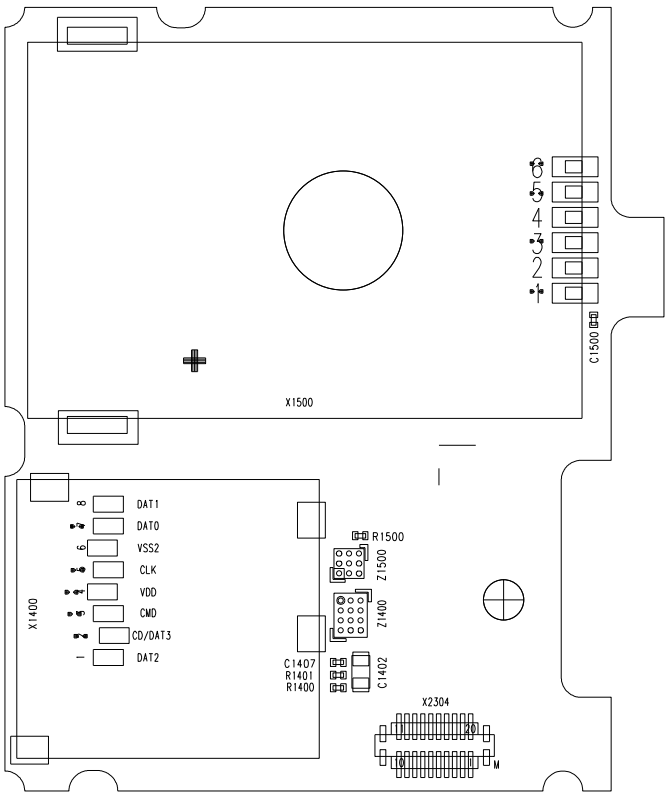

C1402	3C	X1500	4B
C1407	3C	X2304	4C
C1500	4B	Z1400	3C
R1400	3C	Z1500	3B
R1401	3C		
R1500	3B		
X1400	2C		

Achtung : Hoehenprofil C24___-___-___-__-42 (gilt nur fuer Entwicklung)
Liefervarianten siehe : V24851-Z2000-A1-*-35

				DATE	10.10.2005	KESTREL CARD PCB B2+ LAYOUT V1 WIRING DIAGRAMM (SOLDER SIDE 2)	3:1
				NAME	SCHUPFER		
				APPR'D			
				STD			
				MD PD HW4 MCH1			
							SHEET
2	33944	23.11.2005	SD	BENQ mobile		226111	4-
1	32424	10.10.2005	SD				
VERS.	CHANGE NUMBER	DATE	NAME	(Created by BOM number: A5B00900199864-33944)			