Propietary data, Company confidential.
all rights reserved

Als Betriebsgeheimnis anvertraut
alle Rechte vorbehalten

HIERARCHY	SHEET	PDF-SHEET
A5B00920100609-40140	index	sheet 1
	netlist1	sheet 2
	netlist2	sheet 3
	poslist1	sheet 4
	page1	----
	sheet1	sheet 5
	sheet4	sheet 6
	sheet10	sheet 7
	sheet11	sheet 8
	sheet12	sheet 9
	sheet13	sheet 10
	sheet14	sheet 11
	sheet15	sheet 12
	sheet16	sheet 13
	sheet17	sheet 14
	sheet18	sheet 15
	sheet19	sheet 16
	sheet21	sheet 17
	sheet22	sheet 18
	sheet23	sheet 19
	sheet24	sheet 20
	sheet27	sheet 21
	sheet28	sheet 22
	sheet35	sheet 23
	sheet48	sheet 24
	sheet51	sheet 25
	sheet59	sheet 26
	sheet72	sheet 27

VERS.	CHANGE NUMBER	DATE	NAME		
1	40140	07.07.2006	bar	DATE	07.07.2006
				USER	Bartenschlag
				APPR'D	
				PH RD IND LPM	
				BENQ mobile	

Obsidian B2 Board
-Q3340-E2 V1, 900, w FM
TOP HIERARCHY LEVEL
SCHEMATIC

286763

1:1

index

(Created by BOM number: A5B00920100641-40140)

Proprietary data, company confidential.
All rights reserved

Als Betriebsgeheimnis anvertraut
Alle Rechte vorbehalten

1.5V_DSP
/sheet13 12 A
/sheet11 10 C

1.5V_UC
/sheet13 11 A
/sheet11 10 C
/sheet11 7 A

1.8V_MEM1
/sheet13 1 F
/sheet13 8 B
/sheet13 2 F
/sheet11 9 D
/sheet12 8 E

1.8V_MEM2
/sheet13 8 B
/sheet13 1 G
/sheet13 8 C
/sheet13 2 G
/sheet12 8 E
/sheet12 6 C
/sheet12 8 F
/sheet12 5 B
/sheet12 7 B
/sheet12 11 C

2.65V
/page1 2 C
/sheet15 11 E
/sheet13 8 B
/sheet13 1 G
/sheet13 3 D
/sheet13 2 G
/sheet11 2 B
/sheet11 4 A
/sheet11 9 B
/sheet11 7 B
/sheet11 4 A
/sheet11 4 A
/sheet11 4 A
/sheet10 12 A
/sheet10 2 A
/sheet10 2 C
/sheet10 15 D
/sheet51 3 A
/sheet51 4 B
/sheet51 5 B
/sheet22 11 B
/sheet18 3 A

2.9V
/sheet13 8 B
/sheet13 1 G
/sheet13 2 G
/sheet11 7 A
/sheet11 7 A
/sheet23 5 B
/sheet51 5 B
/sheet28 6 A
/sheet22 11 B
/sheet59 10 B

A(0:24)
/sheet10 12 G
/sheet12 15 E
/sheet12 6 D
/sheet12 3 D

AC_CTS
/sheet15 13 E
/sheet10 14 C

AC_DCD
/sheet15 13 E
/sheet10 6 B

AC_RTS
/sheet15 13 E
/sheet10 14 C

AC_RX
/sheet15 13 E
/sheet10 14 C

AC_TX
/sheet15 13 E
/sheet10 13 C

ADV
/sheet10 6 G
/sheet12 15 E
/sheet12 6 B

AKKU_TYP
/sheet14 7 C
/sheet10 11 B

A_FM_STANDBY
/sheet10 14 D
/sheet18 9 C

B6
/sheet12 5 C

BATT+
/sheet14 7 C
/sheet14 7 C
/sheet13 1 A
/sheet13 3 E
/sheet13 2 B
/sheet13 1 G
/sheet13 12 G
/sheet13 2 G
/sheet10 15 F
/sheet21 7 C
/sheet48 4 A
/sheet35 7 D
/sheet59 5 F
/sheet59 3 G

BATT+_F
/sheet15 11 E
/sheet13 3 B
/sheet13 3 A
/sheet13 3 B
/sheet13 3 C
/sheet13 2 G
/sheet13 2 A
/sheet27 2 C

BATT_DCDC
/sheet13 10 D
/sheet13 2 B

BB_SIN26M
/sheet10 2 F
/sheet4 12 C
/sheet59 12 D

BC0
/sheet10 7 G
/sheet12 15 E
/sheet12 6 D

BC1
/sheet10 7 G
/sheet12 15 F
/sheet12 6 D

BFCLKI
/sheet10 7 G
/sheet12 7 B

BFCLKO
/sheet10 7 G
/sheet12 7 B

BOOST_FB
/sheet13 4 C
/sheet13 12 E

BOOST_IFB_N
/sheet13 11 E
/sheet13 4 G

BOOST_IFB_P
/sheet13 11 E

/sheet13 4 C

BOOST_OUT
/sheet13 6 C
/sheet13 11 E

BREF
/sheet10 15 B
/sheet10 12 B

BT_CTS
/sheet10 14 D
/sheet51 2 C

BT_PCM_CLK
/sheet10 14 E
/sheet51 2 C

BT_PCM_IN
/sheet10 14 E
/sheet51 2 C

BT_PCM_OUT
/sheet10 14 E
/sheet51 2 C

BT_PCM_SYNC
/sheet10 14 E
/sheet51 2 C

BT_RESET
/sheet13 7 D
/sheet51 2 D

BT_RTS
/sheet10 13 D
/sheet51 1 C

BT_RX
/sheet10 14 D
/sheet51 2 C

BT_SIN26M
/sheet51 10 D
/sheet4 12 C
/sheet59 12 D

BT_TX
/sheet10 13 F
/sheet51 1 C

BT_TX_DEBUG
/sheet51 5 E

BT_VCXOEN
/sheet13 2 D
/sheet51 2 D

BT_WAKEUP_GSM
/sheet10 5 G
/sheet51 2 B

C5,D3,D7
/sheet12 5 E

CAM_CLKOUT
/sheet10 6 A
/sheet35 4 C

CAM_DAT0
/sheet10 4 B
/sheet35 10 B

CAM_DAT1
/sheet10 5 B
/sheet35 10 B

CAM_DAT2
/sheet10 5 B
/sheet35 10 B

CAM_DAT3
/sheet10 5 B
/sheet35 10 C

CAM_DAT4
/sheet10 5 B
/sheet35 10 C

CAM_DAT5
/sheet10 5 B
/sheet35 10 C

CAM_DAT6
/sheet10 5 B
/sheet35 10 C

CAM_DAT7
/sheet10 5 B
/sheet35 10 C

CAM_HSYNC
/sheet10 5 B
/sheet35 10 C

CAM_PCLK
/sheet10 5 B
/sheet35 4 B

CAM_VSYNC
/sheet10 6 B
/sheet35 10 C

CAS
/sheet10 6 G
/sheet12 15 E
/sheet12 6 C

CHARGE_CNTRL
/sheet13 7 D
/sheet13 10 G

CHARGE_SOURCE
/sheet13 7 D
/sheet13 10 G

CIF_PD
/sheet10 6 B
/sheet35 6 E

CKE
/sheet10 7 G
/sheet12 15 E
/sheet12 6 C

CLK32
/sheet10 6 B
/sheet51 2 D
/sheet18 2 B

CS0_FLASH
/sheet10 7 G
/sheet12 15 F
/sheet12 6 B

CS1_SDRAM
/sheet10 8 G
/sheet12 15 F
/sheet12 6 C

CS2_FLASH
/sheet10 8 G
/sheet12 15 F
/sheet12 6 B

CS3_MEMORY
/sheet10 8 G
/sheet12 6 B

CTS
/sheet15 11 A
/sheet15 9 E

D(0:15)
/sheet10 10 G
/sheet12 15 B
/sheet12 3 D

D(3)
/page1 3 C

D4,D6,J4,J6

/sheet12 5 E

DB_ETMCLK
/sheet10 3 E

DB_ETMSYNC
/sheet10 4 E

DB_RTCK
/sheet10 3 D

DB_TCK
/page1 3 D
/sheet10 3 D

DB_TDI
/page1 3 C
/sheet10 3 D

DB_TDO
/sheet10 3 D

DB_TMS
/page1 3 C
/sheet10 3 D

DB_TRACEPKT2
/sheet10 3 E

DB_TRACEPKT4
/sheet10 4 E

DB_TRACEPKT5
/sheet10 4 E

DB_TRACEPKT6
/sheet10 4 E

DB_TRACEPKT7
/sheet10 4 E

DB_TRST
/page1 3 D
/sheet10 3 D

DCD
/sheet15 9 E
/sheet15 11 B

DISP_CD
/sheet10 3 C
/sheet22 11 B

DISP_CS1
/sheet10 3 C
/sheet22 11 B

DISP_D0
/sheet10 3 C
/sheet22 11 B

DISP_D1
/sheet10 3 C
/sheet22 11 B

DISP_D2
/sheet10 3 C
/sheet22 11 C

DISP_D3
/sheet10 3 C
/sheet22 11 C

DISP_D4
/sheet10 3 C
/sheet22 11 C

DISP_D5
/sheet10 3 C
/sheet22 11 C

DISP_D6
/sheet10 3 C
/sheet22 11 C

DISP_D7

/sheet10 3 C
/sheet22 11 C

DISP_RD
/sheet10 3 C
/sheet22 11 C

DISP_RESET1
/sheet10 3 D
/sheet22 11 B

DISP_VD
/sheet10 3 D
/sheet22 11 B

DISP_WR
/sheet10 3 C
/sheet22 11 B

DVDD_CAMERA
/sheet35 10 E
/sheet35 4 B

F32K
/sheet10 2 F

FEMC1
/sheet59 2 D
/sheet59 8 E

FEMC2
/sheet59 4 D
/sheet59 8 E

FLASH_RESET
/sheet13 7 C
/sheet10 4 F
/sheet12 7 C

FM_DATA_EXIST
/sheet10 14 D
/sheet18 9 B

FM_IN
/sheet15 4 B
/sheet18 2 C

F_VPP
/sheet12 11 C
/sheet12 9 C
/sheet12 6 C

GND_MIC
/sheet15 11 B
/sheet11 7 E
/sheet10 10 A
/sheet19 7 D
/sheet19 8 D
/sheet19 6 C

HF_OUT
/sheet72 2 B
/sheet59 2 B

HF_OUT1
/sheet72 3 B

HF_OUT_BT2
/sheet51 10 B

HW_DET_BAND_SEL
/sheet10 2 B
/sheet10 3 E

HW_DET_BLUETOOTH
/sheet10 2 A
/sheet10 3 E

HW_DET_MOB_TYPE1
/sheet10 2 A
/sheet10 3 E

HW_DET_MOB_TYPE2
/sheet10 4 E
/sheet10 3 A

HW_DET_MOB_TYPE3
/sheet10 4 E
/sheet10 3 A

HW_DET_MOB_TYPE4
/sheet10 4 E
/sheet10 3 B

I2C_2_CLK
/sheet10 8 B
/sheet35 4 C

I2C_2_DAT
/sheet10 8 B
/sheet35 4 C

I2C_CLK
/sheet13 3 F
/sheet10 14 E
/sheet18 9 C

I2C_DAT
/sheet13 3 F
/sheet10 14 E
/sheet18 9 C

I2S2_CLK0_TX
/sheet13 8 F
/sheet10 14 E

I2S2_CLK1_RX
/sheet13 3 F
/sheet10 14 E

I2S2_RX
/sheet13 3 F
/sheet10 14 F

I2S2_TX
/sheet13 8 F
/sheet10 14 E

I2S2_WA0_TX
/sheet13 8 F
/sheet10 14 F

I2S2_WA1_RX
/sheet13 3 F
/sheet10 14 F

J2,J3,J7,J8
/sheet12 5 F

KB_ON_OFF
/sheet13 2 C
/sheet27 1 B

KPD_BCKLT
/sheet27 1 B
/sheet28 8 B

KPD_BCKLT_PWM
/sheet13 7 D
/sheet28 4 C

KP_IN0
/sheet13 7 C
/sheet10 5 G
/sheet27 1 C

KP_IN1
/sheet10 5 G
/sheet27 1 C

KP_IN2
/sheet10 5 G
/sheet27 1 C

KP_IN3
/sheet10 5 G
/sheet27 1 C
/sheet27 5 D

KP_IN4
/sheet10 5 G
/sheet27 1 C

/sheet27 5 E

KP_IN5_OUT6
/sheet10 5 G
/sheet27 1 B

KP_OUT0
/sheet11 2 C
/sheet10 5 G
/sheet27 1 C

KP_OUT1
/sheet10 5 G
/sheet27 1 C

KP_OUT2
/sheet10 6 G
/sheet27 1 C

KP_OUT3
/sheet10 6 G
/sheet27 1 B

LCD_BCKLT
/sheet23 8 C
/sheet22 11 B

LCD_BCKLT_PWM
/sheet13 7 D
/sheet23 3 D

MIC1A
/sheet10 10 A
/sheet19 7 B

MIC1B
/sheet10 9 A
/sheet19 7 B

MICBIAS_F
/sheet15 11 C
/sheet19 7 A
/sheet19 6 C

MICEA
/sheet15 11 B
/sheet10 10 A

MICEB
/sheet15 11 B
/sheet10 10 A

MMCI_CD
/sheet10 13 B
/sheet10 13 F
/sheet48 3 C

MMCI_CLK
/sheet10 13 B
/sheet48 3 C

MMCI_CMD
/sheet10 12 B
/sheet48 3 C

MMCI_DAT0
/sheet10 12 B
/sheet48 3 C

MMCI_DAT1
/sheet10 12 B
/sheet48 5 D

MMCI_DAT2
/sheet10 12 B

/sheet48 5 E

MMC_VCC
/sheet48 3 B
/sheet48 8 A
/sheet48 6 A

MMC_VCC_EN
/sheet10 6 G
/sheet48 3 A

MON1
/sheet10 3 D

MON2
/sheet10 3 D

MONO1_LP_OUT
/sheet13 7 E
/sheet13 3 E

MONO1_OUT
/sheet17 7 A
/sheet13 8 E
/sheet13 2 G
/sheet13 1 G

MONO2_LP_OUT
/sheet13 7 E
/sheet13 3 E

MONO2_OUT
/sheet17 7 B
/sheet13 8 E
/sheet13 2 G
/sheet13 1 G

OSC32K
/sheet10 2 F

PHANTOM_BUF_OUT
/sheet15 11 B
/sheet13 7 E

PM_CHARGE_UC
/sheet13 2 D
/sheet10 7 B

PM_INT
/sheet13 7 F
/sheet10 14 E

PM_POWER_ON
/sheet13 3 C
/sheet13 7 C

PM_RESET_N
/sheet13 7 C
/sheet10 3 F

PM_RF2_EN
/sheet13 2 C
/sheet10 7 B

PM_RINGIN
/sheet13 3 E
/sheet10 8 B

PM_RTC_INT
/sheet13 2 C
/sheet10 4 F

PM_SIN26M
/sheet13 3 E
/sheet4 12 C

/sheet59 12 D

PM_WADOG
/sheet13 2 D
/sheet10 6 B

PM_WADOG2
/sheet13 2 D

POWER
/sheet15 11 B
/sheet13 1 G
/sheet13 2 G
/sheet13 10 G

RAS
/sheet10 6 G
/sheet12 15 E
/sheet12 6 C

RD
/sheet10 7 G
/sheet12 15 E
/sheet12 6 B

REF_GND
/sheet13 3 A
/sheet13 6 G

RF_AFC
/sheet10 2 F
/sheet4 12 C
/sheet59 15 C

RF_ANT_DET
/sheet10 7 A
/sheet72 5 C

RF_CLK
/sheet10 8 B
/sheet4 12 C
/sheet59 11 E

RF_DAT
/sheet10 8 B
/sheet4 12 C
/sheet59 11 E

RF_I
/sheet10 9 B
/sheet4 12 B
/sheet59 11 D

RF_IX
/sheet10 9 B
/sheet4 12 B
/sheet59 11 D

RF_Q
/sheet10 9 B
/sheet4 12 B
/sheet59 11 D

RF_QX
/sheet10 9 B
/sheet4 12 B
/sheet59 11 D

RF_RAMP1
/sheet10 9 A
/sheet4 12 C
/sheet59 7 E

RF_STR
/sheet10 8 B

/sheet4 12 C
/sheet59 11 E

RF_TPA_DIG
/sheet10 7 B
/sheet4 12 D
/sheet59 2 F

RTS
/sheet15 11 A
/sheet15 9 E

RX
/sheet15 11 B
/sheet15 9 E

SDCLKI
/sheet10 7 G
/sheet12 7 C

SDCLKO
/sheet10 6 G
/sheet12 7 C

SENSE_IN1
/sheet13 2 D
/sheet13 12 G

SENSE_IN2
/sheet13 12 G
/sheet13 2 D

SERIAL_EN
/sheet15 11 E
/sheet10 8 B

SIM_CLK
/sheet16 10 C
/sheet10 13 C

SIM_IO
/sheet16 10 C
/sheet10 13 C

SIM_RST
/sheet16 10 C
/sheet10 13 C

SLI_LED
/sheet13 7 D
/sheet24 3 B

STEPDOWN_GND
/sheet13 11 A
/sheet13 6 F
/sheet13 11 A
/sheet13 8 H
/sheet13 3 B

STEREO1_OUT
/sheet15 11 B
/sheet13 7 E

STEREO2_OUT
/sheet15 11 B
/sheet13 7 E

TRIG_IN
/sheet10 3 D

TVCXO
/sheet10 15 A
/sheet10 11 B
/sheet4 12 B
/sheet59 15 C

TX
/sheet15 9 E
/sheet15 11 B

TXBAND
/sheet59 5 E
/sheet59 9 E

USB_D+
/sheet15 11 D
/sheet10 13 C

USB_D-
/sheet15 11 D
/sheet10 13 C

USB_MODE
/sheet15 11 D
/sheet13 8 B

VAFL
/sheet13 2 E
/sheet10 11 A
/sheet18 9 A

VAFR
/sheet13 2 E
/sheet10 11 A
/sheet18 9 B

VAUDREGA
/sheet13 3 E
/sheet13 2 G
/sheet13 1 G
/sheet13 8 C
/sheet13 3 C

VBAT
/sheet10 11 B
/sheet10 15 F

VBOOST
/sheet13 1 G
/sheet13 2 G
/sheet13 12 C
/sheet13 12 D
/sheet27 2 C
/sheet22 11 B

VBUCK
/sheet13 1 G
/sheet13 2 G
/sheet13 12 A

VBUCK_FB
/sheet13 10 A
/sheet13 2 C

VBUCK_LX
/sheet13 10 A
/sheet13 6 B
/sheet13 2 G
/sheet13 1 G

VCC_LIGHT
/sheet27 2 C

VCXOEN_UC
/sheet13 2 C
/sheet10 4 F

VDD_AFC
/sheet13 1 G
/sheet13 2 G
/sheet13 8 C

/sheet11 4 A

VDD_BT
/sheet13 1 G
/sheet13 8 C
/sheet13 2 G
/sheet51 4 B
/sheet51 2 A

VDD_BT_RF2
/sheet51 5 B
/sheet51 1 A

VDD_CHARGE
/sheet13 2 D
/sheet13 10 G

VDD_FM_FM
/sheet18 4 A
/sheet18 9 B

VDD_RF1
/sheet13 2 G
/sheet13 8 C
/sheet13 1 G
/sheet4 12 C
/sheet59 15 D
/sheet59 8 B
/sheet59 9 B

VDD_RF2
/sheet13 8 C
/sheet13 2 G
/sheet13 1 G
/sheet72 7 C
/sheet4 12 D
/sheet59 7 B
/sheet59 10 B
/sheet59 8 B
/sheet59 5 F
/sheet59 15 D
/sheet59 7 F

VDD_RTC
/sheet13 2 C
/sheet13 1 G
/sheet13 2 G
/sheet13 8 B
/sheet11 7 A

VDD_SIM
/sheet16 10 C
/sheet13 8 B
/sheet13 2 G
/sheet13 1 G

VDD_USB
/sheet13 8 B
/sheet13 1 H
/sheet13 2 H
/sheet11 7 A

VDD_VIBRA
/sheet13 8 B
/sheet13 2 H
/sheet13 1 H
/sheet21 4 C

VMICP
/sheet10 10 A
/sheet19 8 C

VREFEXS_GND
/sheet13 2 E
/sheet13 4 F

VERS.	CHANGE NUMBER	DATE	NAME
1	40140	07.07.2006	bar

DATE	07.07.2006
USER	Bartenschlag
APPR'D	
PH RD IND LPM	

Obsidian B2 Board
-Q3340-E2 V1, 900, w FM
TOP HIERARCHY LEVEL
SCHEMATIC

1:1

BENQ mobile

286763

netlist1

(Created by BOM number: A5B00920100641-40140)

Proprietary data, company confidential.
All rights reserved

Als Betriebsgeheimnis anvertraut
Alle Rechte vorbehalten

1	2	3	4	5

WAIT
/sheet10 6 G
/sheet12 7 B

WR
/sheet10 7 G
/sheet12 15 E
/sheet12 6 B
/sheet12 6 C

A

B

C

D

E

				DATE	07.07.2006	Obsidian B2 Board -Q3340-E2 V1, 900, w FM TOP HIERARCHY LEVEL SCHEMATIC	1:1
				USER	Bartenschlag		
				APPR'D			
				PH RD IND LPM			
				BENQ mobile		286763	netlist2
1	40140	07.07.2006	bar				
VERS.	CHANGE NUMBER	DATE	NAME	(Created by BOM number: A5B00920100641-40140)			

Proprietary data, company confidential.
All rights reserved

Als Betriebsgeheimnis anvertraut
Alle Rechte vorbehalten

C1000 /sheet10 2 E
C1001 /sheet10 2 F
C1002 /sheet10 1 F
C1003 /sheet10 1 F
C1004 /sheet10 8 A
C1005 /sheet10 7 A
C1008 /sheet10 15 E
C1009 /sheet10 15 E
C1011 /sheet11 7 E
C1012 /sheet10 6 B
C1013 /sheet10 15 G
C1037 /sheet10 5 A
C1038 /sheet10 6 A
C1039 /sheet10 4 G
C1040 /sheet10 3 F
C1070 /sheet10 9 A
C1071 /sheet10 10 B
C1072 /sheet10 11 A
C1073 /sheet10 11 A
C1074 /sheet10 10 A
C1075 /sheet10 10 B
C1076 /sheet10 9 A
C1077 /sheet10 9 A
C1078 /sheet10 9 A
C1079 /sheet10 9 A
C1088 /sheet10 10 A
C1110 /sheet11 4 A
C1115 /sheet11 10 C
C1116 /sheet11 10 C
C1120 /sheet11 7 B
C1121 /sheet11 7 B
C1122 /sheet11 6 A
C1123 /sheet11 6 A
C1124 /sheet11 5 A
C1125 /sheet11 5 A
C1126 /sheet11 4 B
C1128 /sheet11 4 B
C1129 /sheet11 4 A
C1130 /sheet11 4 A
C1131 /sheet11 9 C
C1132 /sheet11 8 B
C1133 /sheet11 9 C
C1134 /sheet11 5 A
C1135 /sheet11 9 C
C1136 /sheet11 8 D
C1137 /sheet11 8 D
C1138 /sheet11 9 C
C1139 /sheet11 9 D
C1140 /sheet11 7 B
C1214 /sheet10 15 F
C1250 /sheet12 7 C
C1251 /sheet12 10 D
C1252 /sheet12 5 F
C1253 /sheet12 6 F
C1254 /sheet12 6 F
C1256 /sheet12 6 E
C1257 /sheet12 6 E
C1258 /sheet12 6 E
C1259 /sheet12 7 E
C1260 /sheet12 6 E
C1261 /sheet12 6 E
C1262 /sheet12 6 E
C1263 /sheet12 6 F
C1264 /sheet12 6 F
C1265 /sheet12 7 E
C1301 /sheet13 3 A
C1302 /sheet13 4 A
C1303 /sheet13 4 A
C1304-2 /sheet13 2 B
C1304-1 /sheet13 2 B
C1305 /sheet13 2 B
C1306-1 /sheet13 3 B
C1306-2 /sheet13 3 B
C1308 /sheet13 3 D
C1309 /sheet13 4 D
C1310 /sheet13 4 D
C1311 /sheet13 4 D
C1312 /sheet13 4 D
C1313 /sheet13 4 D
C1314 /sheet13 4 D
C1315-1 /sheet13 1 B
C1315-2 /sheet13 1 B
C1316 /sheet13 7 C
C1317 /sheet13 3 E
C1318-1 /sheet13 1 B
C1318-2 /sheet13 1 B
C1319 /sheet13 3 E
C1320 /sheet13 3 D
C1322 /sheet13 3 D
C1325 /sheet13 3 E
C1326 /sheet13 6 B
C1327 /sheet13 7 A
C1329-2 /sheet13 6 A
C1329-1 /sheet13 6 A
C1330-1 /sheet13 6 A
C1330-2 /sheet13 6 A
C1332-1 /sheet13 8 A
C1332-2 /sheet13 7 A
C1333 /sheet13 6 E
C1334 /sheet13 6 E
C1338 /sheet13 8 A
C1339 /sheet13 11 G
C1340 /sheet13 7 C
C1341 /sheet13 7 E
C1344 /sheet13 8 B
C1345 /sheet13 8 B
C1347 /sheet13 8 E
C1348 /sheet13 8 E
C1352 /sheet13 12 E
C1353 /sheet13 12 C
C1354 /sheet13 11 A
C1355 /sheet13 11 E
C1357 /sheet13 10 E
C1358 /sheet13 12 E
C1359 /sheet13 11 A
C1360 /sheet13 10 G
C1361 /sheet13 11 G
C1362 /sheet13 11 G
C1363 /sheet13 12 E
C1364-2 /sheet13 7 C
C1364-1 /sheet13 7 C
C1367-1 /sheet13 7 C
C1367-2 /sheet13 7 C
C1371 /sheet13 4 A
C1372 /sheet13 4 A
C1373 /sheet13 4 A
C1374 /sheet13 4 D
C1381 /sheet13 3 E
C1382 /sheet13 3 E
C1391 /sheet13 6 E
C1398 /sheet13 11 E
C1400 /sheet14 5 D
C1402 /sheet14 6 D
C1403 /sheet14 6 D
C1405 /sheet14 6 D
C1426 /sheet14 6 C
C1501 /sheet15 9 B
C1502 /sheet15 9 B
C1504 /sheet15 3 A
C1506 /sheet15 8 B
C1507 /sheet15 6 A
C1508 /sheet15 3 B
C1509 /sheet15 4 B
C1510 /sheet15 7 B
C1512 /sheet15 11 B
C1513 /sheet15 6 B
C1514 /sheet15 8 B
C1515 /sheet15 12 F
C1516 /sheet15 13 F
C1517 /sheet15 8 B
C1525 /sheet15 8 B
C1526 /sheet15 7 B
C1541 /sheet15 8 B
C1548 /sheet15 7 B
C1605 /sheet16 9 D
C1705 /sheet17 4 B
C1708 /sheet17 5 B
C1709 /sheet17 5 B
C1710 /sheet17 6 A
C1712 /sheet17 6 B
C1801 /sheet18 4 A
C1802 /sheet18 6 A
C1803 /sheet18 6 B
C1804 /sheet18 7 A
C1805 /sheet18 7 A
C1806 /sheet18 6 A
C1807 /sheet18 7 B
C1809 /sheet18 3 B
C1810 /sheet18 7 B
C1812 /sheet18 4 B
C1813 /sheet18 4 C
C1815 /sheet18 4 C
C1816 /sheet18 4 C
C1818 /sheet18 3 C
C1822 /sheet18 5 C
C1823 /sheet18 5 D
C1824 /sheet18 4 C
C1825 /sheet18 5 D
C1826 /sheet18 6 D
C1901 /sheet19 5 B
C1902 /sheet19 5 B
C1904 /sheet19 5 C
C1930 /sheet19 8 C
C1931 /sheet19 7 C
C2100 /sheet21 5 C
C2102 /sheet21 6 C
C2201 /sheet22 8 D
C2203 /sheet22 9 D
C2204 /sheet22 8 D
C2205 /sheet22 8 D
C2206 /sheet22 7 D
C2207 /sheet22 9 D
C2208 /sheet22 10 D
C2209 /sheet22 10 D
C2210 /sheet22 6 D
C2211 /sheet22 6 D
C2212 /sheet22 6 D
C2213 /sheet22 7 D
C2214 /sheet22 7 D
C2215 /sheet22 9 D
C2216 /sheet22 9 D
C2217 /sheet22 10 D
C2218 /sheet22 7 D
C2219 /sheet22 8 D
C2320 /sheet23 5 C
C2321 /sheet23 7 C
C2322 /sheet23 4 D
C2400 /sheet24 3 C
C2405 /sheet24 3 B
C2702 /sheet27 2 B
C2703 /sheet27 2 B
C2704 /sheet27 3 B
C2705 /sheet27 3 B
C2706 /sheet27 3 B
C2707 /sheet27 3 B
C2708 /sheet27 3 B
C2709 /sheet27 4 B
C2710 /sheet27 4 B
C2711 /sheet27 4 B
C2712 /sheet27 4 B
C2713 /sheet27 4 B
C2714 /sheet27 5 B
C2720 /sheet27 4 E
C2721 /sheet27 4 E
C2801 /sheet28 5 C
C2856 /sheet28 5 B
C3501 /sheet35 6 C
C3502 /sheet35 6 C
C3513 /sheet35 7 E
C3514 /sheet35 7 E
C3515 /sheet35 9 E
C4081 /sheet72 2 C
C4082 /sheet72 3 C
C4083 /sheet72 6 C
C4084 /sheet72 7 B
C4085 /sheet72 6 B
C4800 /sheet48 5 B
C4801 /sheet48 6 B
C4806 /sheet48 3 C
C4807 /sheet48 4 B
C4810 /sheet48 4 B
C5100 /sheet51 4 B
C5101 /sheet51 4 B
C5102 /sheet51 2 A
C5104 /sheet51 7 C
C5106 /sheet51 5 B
C5108 /sheet51 5 B
C5111 /sheet51 7 C
C5112 /sheet51 6 B
C5113 /sheet51 9 C
C5117 /sheet51 2 A
C5120 /sheet51 3 A
C5121 /sheet51 8 D
C5122 /sheet51 7 D
C5130 /sheet51 1 A
C5148 /sheet51 10 C
C5149 /sheet51 10 C
C5150 /sheet51 10 C
C5930 /sheet59 1 C
C5931 /sheet59 2 C
C5932 /sheet59 2 C
C5933 /sheet59 1 C
C5934 /sheet59 7 B
C5935 /sheet59 8 B
C5936 /sheet59 3 D
C5937 /sheet59 3 D
C5939 /sheet59 5 E
C5940 /sheet59 4 F
C5941 /sheet59 4 F
C5942 /sheet59 5 F
C5943 /sheet59 2 F
C5944 /sheet59 8 B
C5945 /sheet59 8 B
C5946 /sheet59 9 B
C5947 /sheet59 9 B
C5948 /sheet59 9 B
C5949 /sheet59 9 B
C5950 /sheet59 10 B
C5951 /sheet59 8 B
C5953 /sheet59 11 C
C5958 /sheet59 14 D
C5959 /sheet59 14 D
C5960 /sheet59 14 C
C5961 /sheet59 14 C
C5962 /sheet59 3 G
C5964 /sheet59 8 F
C5965 /sheet59 8 F
C5966 /sheet59 9 F
C5967 /sheet59 9 F
C5970 /sheet59 7 G
C5971 /sheet59 7 G
C5972 /sheet59 13 C
C5973 /sheet59 13 C
D1000-2 /sheet11 3 D
D1000-1 /sheet10 12 F
D1299 /sheet12 4 E
D1300 /sheet13 4 F
D1800 /sheet18 5 C
D5100 /sheet51 2 D
D5930 /sheet59 2 C
D5932 /sheet59 8 E
D5933 /sheet59 4 E
L1300 /sheet13 3 B
L1301 /sheet13 11 A
L1302 /sheet13 10 D
L1303 /sheet13 8 C
L1318 /sheet13 2 A
L1320 /sheet13 8 C
L1503 /sheet15 4 B
L1504 /sheet15 4 B
L1505 /sheet15 4 B
L1509 /sheet15 4 B
L1510 /sheet15 4 B
L1511 /sheet15 3 B
L1591 /sheet15 4 B
L1701 /sheet17 5 A
L1702 /sheet17 5 B
L1703 /sheet17 5 A
L1704 /sheet17 5 C
L1800 /sheet18 3 C
L1801 /sheet18 6 D
L1802 /sheet18 6 D
L1803 /sheet18 6 D
L4081 /sheet72 3 B
L4083 /sheet72 7 B
L4085 /sheet72 6 C
L4089 /sheet72 7 B
L5101 /sheet51 9 B
L5102 /sheet51 8 D
L5103 /sheet51 7 C
L5104 /sheet51 7 C
L5105 /sheet51 7 C
L5931 /sheet59 1 C
N3500 /sheet35 7 E
N4800 /sheet48 4 B
R101 /page1 3 C
R1006 /sheet10 2 F
R1008 /sheet10 7 G
R1009 /sheet10 7 G
R1010 /sheet10 13 B
R1012 /sheet10 9 A
R1014 /sheet10 12 B
R1015 /sheet10 2 C
R1016 /sheet10 2 C
R1018 /sheet10 15 B
R1021 /sheet10 15 B
R1022 /sheet10 15 F
R1023 /sheet10 15 G
R1024 /sheet10 15 D
R1025 /sheet10 15 D
R1037 /sheet10 6 A
R1038 /sheet10 12 A
R1039 /sheet10 12 A
R1040 /sheet10 6 B
R1041 /sheet10 2 A
R1045 /sheet10 2 B
R1046 /sheet10 3 A
R1047 /sheet10 3 B
R1048 /sheet10 3 A
R1049 /sheet10 3 B
R1050 /sheet10 2 A
R1051 /sheet10 3 B
R1052 /sheet10 2 B
R1053 /sheet10 3 A
R1054 /sheet10 2 A
R1055 /sheet10 2 B
R1072 /sheet10 11 A
R1073 /sheet10 11 A
R1100 /sheet11 3 C
R1130 /sheet11 6 A
R1251 /sheet12 6 B
R1252 /sheet12 6 B
R1254 /sheet12 10 C
R1255 /sheet12 7 C
R1256 /sheet12 5 C
R1257 /sheet12 5 C
R1280 /sheet12 5 C
R1300 /sheet13 4 B
R1302 /sheet13 3 B
R1303 /sheet13 2 C
R1308 /sheet13 3 D
R1320 /sheet13 8 C
R1340 /sheet13 12 E
R1341 /sheet13 12 E
R1343 /sheet13 11 E
R1344 /sheet13 11 G
R1345 /sheet13 11 E
R1346 /sheet13 12 E
R1347 /sheet13 12 E
R1353 /sheet13 10 G
R1399 /sheet13 6 C
R1500 /sheet15 5 C
R1501 /sheet15 6 C
R1502 /sheet15 5 C
R1505 /sheet15 6 C
R1508 /sheet15 10 B
R1512 /sheet15 7 A
R1524 /sheet15 10 B
R1525 /sheet15 10 B
R1530 /sheet15 10 D
R1531 /sheet15 10 D
R1532 /sheet15 10 D
R1614 /sheet16 9 C
R1705 /sheet17 3 B
R1706 /sheet17 4 B
R1805 /sheet18 2 B
R1806 /sheet18 3 A
R1807 /sheet18 8 A
R1808 /sheet18 8 B
R1809 /sheet18 8 C
R1810 /sheet18 8 C
R1812 /sheet18 5 C
R1813 /sheet18 5 D
R1814 /sheet18 5 D
R1815 /sheet18 7 C
R1816 /sheet18 7 C
R1817 /sheet18 3 B
R1901 /sheet19 6 B
R1902 /sheet19 6 B
R1926 /sheet19 7 B
R1927 /sheet19 6 B
R1930 /sheet19 7 C
R2203 /sheet22 10 B
R2204 /sheet22 10 B
R2205 /sheet22 10 B
R2206 /sheet22 10 B
R2207 /sheet22 10 C
R2208 /sheet22 10 C
R2209 /sheet22 10 C
R2210 /sheet22 10 C
R2211 /sheet22 10 C
R2212 /sheet22 10 C
R2213 /sheet22 10 C
R2214 /sheet22 10 B
R2215 /sheet22 10 B
R2216 /sheet22 10 B
R2310 /sheet23 5 B
R2311 /sheet23 7 C
R2312 /sheet23 5 C
R2417 /sheet24 3 B
R2704 /sheet27 2 C
R2705 /sheet27 2 C
R2706 /sheet27 2 B
R2707 /sheet27 2 B
R2708 /sheet27 2 C
R2709 /sheet27 2 C
R2710 /sheet27 2 C
R2711 /sheet27 4 D
R2712 /sheet27 4 E
R2856 /sheet28 6 A
R2859 /sheet28 7 B
R2860 /sheet28 6 B
R3500 /sheet35 6 B
R3501 /sheet35 5 B
R3502 /sheet35 5 B
R3539 /sheet35 6 E
R4090 /sheet72 6 C
R4091 /sheet72 6 C
R4800 /sheet48 3 B
R4806 /sheet48 3 C
R4807 /sheet48 3 C
R4808 /sheet48 8 C
R4809 /sheet48 8 C
R4810 /sheet48 6 D
R4811 /sheet48 6 E
R5101 /sheet51 5 B
R5103 /sheet51 2 C
R5110 /sheet51 9 C
R5111 /sheet51 9 D
R5122 /sheet51 8 D
R5126 /sheet51 2 D
R5930 /sheet59 1 C
R5931 /sheet59 1 C
R5932 /sheet59 2 F
R5933 /sheet59 10 B
R5934 /sheet59 10 B
R5937 /sheet59 5 D
R5938 /sheet59 5 D
R5939 /sheet59 5 D
R5940 /sheet59 5 D
R5941 /sheet59 5 E
R5942 /sheet59 5 E
R5945 /sheet59 4 E
R5959 /sheet59 11 C
R5960 /sheet59 12 C
R5967 /sheet59 15 C
R5970 /sheet59 9 F
R5974 /sheet59 8 G
R5975 /sheet59 8 G
R5982 /sheet59 13 C
R5983 /sheet59 14 C
R5984 /sheet59 14 C
R5992 /sheet59 13 C
R5993 /sheet59 13 C
R5994 /sheet59 12 C
TP1317 /sheet13 8 B
TP1355 /sheet13 11 C
TP1334 /sheet13 7 C
TP1327 /sheet13 11 A
TP1306 /sheet13 8 B
TP1302 /sheet13 4 D
TP1309 /sheet13 8 B
TP1013 /sheet10 15 A
TP1014 /sheet10 15 B
TP1251 /sheet12 11 C
TP1250 /sheet12 11 C
TP2302 /sheet23 7 C
TP5101 /sheet51 10 C
TP4800 /sheet48 6 A
TP3502 /sheet35 9 E
TP2401 /sheet24 3 C
TP5901 /sheet59 11 D
TP5933 /sheet59 5 E
TP5932 /sheet59 6 G
V1302 /sheet13 11 A
V1305-2 /sheet13 10 G
V1305-1 /sheet13 11 G
V1376 /sheet13 11 E
V1400 /sheet14 5 C
V1800 /sheet18 6 D
V1801 /sheet18 6 D
V2100 /sheet21 6 C
V2300-1 /sheet23 7 C
V2300-2 /sheet23 5 C
V2302 /sheet23 5 D
V2405 /sheet24 3 C
V2801-1 /sheet28 7 B
V2801-2 /sheet28 6 B
V2802 /sheet28 5 C
V5930 /sheet59 13 C
X1000 /sheet10 1 G
X1300 /sheet13 2 H
X1400 /sheet14 3 D
X1504 /sheet15 2 B
X1604 /sheet16 2 C
X1800 /sheet18 8 D
X2200 /sheet22 5 C
X2201 /sheet22 3 B
X2705 /sheet27 5 B
X3500 /sheet35 7 C
X4000 /sheet72 9 C
X4081 /sheet72 5 B
X4899 /sheet48 10 C
X5100 /sheet51 1 E
X5900 /sheet59 13 F
Z1001 /sheet10 2 F
Z1501 /sheet15 10 E
Z1601 /sheet16 5 C
Z4801 /sheet48 5 C
Z5100 /sheet51 9 C
Z5930 /sheet59 12 C

				DATE	07.07.2006
				USER	Bartenschlag
				APPR'D	
				PH RD IND LPM	
				BENQ mobile	
1	40140	07.07.2006	bar		
VERS.	CHANGE NUMBER	DATE	NAME		

Obsidian B2 Board
-Q3340-E2 V1, 900, w FM
TOP HIERARCHY LEVEL
SCHEMATIC

1:1

286763

poslist1

(Created by BOM number: A5B00920100641-40140)

Propietary data, Company confidential.
all rights reserved

Als Betriebsgeheimnis anvertraut
alle Rechte vorbehalten

TABLE_OF_CONTENTS_PROJECT

PAGE	BLOCK	STATUS
1	TOP HIERARCHICAL OVERVIEW	
2		
3		
4	DEFINITION OF HIT POINTS	
5-8		
9		
10	SGOLD2	
11	SGOLD2 SUPPLY DOMAIN	
12	SDRAM FLASH	
13	MOZART / TWIGO	
14	BATTERY CONNECTOR	
15	IO-CONNECTOR	
16	SIM-CONNECTOR	
17	ONE SPEAKER SOLUTION	
19	MICROPHONE CIRCUIT 1	
21	VIBRA	
22	DISPLAY CONNECTOR	
23	DISPLAY/ KEYPAD BACKLIGHT CONTROL	
27	MMI CONNECTOR	
28	KEYPAD BACKLIGHT	
35	CAMERA INTERFACE	
48	MMC READER	
51	BLUETOOTH SOLUTION 2	
59	BRIGHT 6PL	
72	ANTENNA CIRCUIT	

PAGE	BLOCK	STATUS

VERS.	CHANGE NUMBER	DATE	NAME
1	40140	07.07.2006	bar

DATE 07.07.2006
USER Bartenschlag
APPR'D
PH RD IND LPM

BENQ mobile

Obsidian B2 Board
-Q3340-E2 V1, 900, w FM
TOP HIERARCHY LEVEL
SCHEMATIC

286763

1:1

sheet1

(Created by BOM number: A5B00920100641-40140)

Propietary data, Company confidential.
all rights reserved

Als Betriebsgeheimnis anvertraut
alle Rechte vorbehalten

HIT_POINTS LOGIK/HF_PART_1

HIT_POINTS LOGIK/HF

400-449

TRANCEIVER ENABLE SIGNAL
TRANCEIVER CLOCK SIGNAL
TRANCEIVER DATA SIGNAL

Bidirectional analoue RX/TX modulatet signal
Baseband signals

Reference freqency correction

DCSTX enable Asic for Hitachisolution
GSMTX enable Asic for Hitachisolution

analogue power amplifier ramping signal

26 MHz reference frequency

26 MHz reference frequency for Bluetooth

26 MHz reference frequency for Powermanagement

Temperature sensor X-tal

DETECTION internal/external Antenna

programmed voltage 1

programmed voltage 2

switched LOW- / HIGH-band

XG30 → RF_I
XG31 → RF_Q
XG32 → RF_IX
XG33 → RF_QX
XG34 → TVCXO

XG36 → RF_AFC
XG37 → RF_CLK
XG38 → RF_DAT
XG39 → RF_STR
XG40 → RF_RAMP1
XG41 → BB_SIN26M
XG42 → BT_SIN26M
XG43 → PM_SIN26M
XG44 → VDD_RF1
XG45 → VDD_RF2
XG46 → RF_TPA_DIG

HIT_POINTS LOGIK/BLUETOOTH

USART1_TXD

USART1_RXD

USART1_CTS

USART1_RTS

				DATE	07.07.2006	Obsidian B2 Board -Q3340-E2 V1, 900, w FM TOP HIERARCHY LEVEL SCHEMATIC	1:1
				USER	Bartenschlag		
				APPR'D			
				PH RD IND LPM			
				BENQ mobile		286763	sheet4
1	40140	07.07.2006	bar				
VERS.	CHANGE NUMBER	DATE	NAME	(Created by BOM number: A5B00920100641-40140)			

Propietary data, Company confidential.
all rights reserved

Als Betriebsgeheimnis anvertraut
alle Rechte vorbehalten

SGOLD2

1000-1099

HW_DET

2.65V
100K R1041
SW_TP1092
100K R1053
100K R1046
HW_DET_MOB_TYPE1
SW_TP1086
SW_TP1087
HW_DET_MOB_TYPE2
HW_DET_BLUETOOTH
SW_TP1090
SW_TP1088
HW_DET_MOB_TYPE3
HW_DET_BAND_SEL
SW_TP1091
SW_TP1089
HW_DET_MOB_TYPE4
100K R1052
100K R1055
100K R1049
GND

HW_DET_FM-Radio

2.65V
100K R1015

Camera Interface

CAM_DAT0 E11
CAM_DAT1 B11
CAM_DAT2 C10
CAM_DAT3 A11
CAM_DAT4 D11
CAM_DAT5 B10
CAM_DAT6 A10
CAM_DAT7 B9
CAM_PCLK C9
CAM_HSYNC A8
CAM_VSYNC D10
CAM_CLKOUT E9
CIF_RESET C8
CIF_PD B8
R1037 100R
R1040 33R
C1038 22P
GND

DSP

CLK32 F3
SW_TP1095 G5
AC_DCD F1
PM_WADOOG F2
DSPIN0
DSPIN1
DSPOUT0
DSPOUT1

TDMA-TIMER

PM_CHARGE_UC B17
RF_TPA_DIG B16
PM_RF2_EN B15
I2C_2_DAT D13
SERIAL_EN B14
I2C_2_CLK C18
T_OUT0
T_OUT1
T_OUT2
T_OUT3
T_OUT4
T_OUT5
T_OUT6
T_OUT7
T_OUT8
T_OUT9
T_OUT10
T_OUT11
T_OUT12

RF_CTRL

RF_ANT_DET D15
C1005 27P EMC
GND
SW_TP1088 C13
SW_TP1084 D17
RF_STR C17
PM_RINGIN A17
RF_DAT C16
RF_CLK B18
RF_STR0
RF_STR1
RF_DATA
RF_CLK

Analog Interface

RF_RAMP1 L12
1K R1012
RF_I M11
RF_IX J12
RF_Q K12
RF_QX R13
BB_I R14
BB_IX P15
BB_Q N15
BB_QX M18
MIC1B M17
MIC1A P19
MICEB N18
MICEA K16
VMICP L16
33N C1070
33N C1071
33N C1074
C1075 GND_MIC
VAFL 2K2
VAFR 2K2
R1073
R1072
100N C1073
100N C1072
SW_TP1045 T18
SW_TP1044 V18
TVCXO U19
VBAT V19
AKKU_TYP U17
BREF W17
GND
GND
100K R1039
GND
22K-F R1014
MMCI_CMD M16
MMCI_DAT0 E12
MMCI_DAT1 C12
MMCI_DAT2 D12
MMCI_DAT3 B12
MMCI_CLK A12
IRDA_RX C11
PAOUT1-1
PAOUT1-2
PAOUT2-1
PAOUT2-2
EP_PA1-1
EP_PA1-2
EP_PA2
EPREF-1
EPREF-2
M_0
M_1
M_2
M_7
M_8
M_9
M_10
IREF
EP_P1-1
EP_P1-2
EP_N1-1
EP_N1-2
VMICN
VMICP
MICN1
MICP1
MICN2
MICP2

Display Interface

DISP_D0 A6
DISP_D1 C7
DISP_D2 B6
DISP_D3 D8
DISP_D4 E7
DISP_D5 A5
DISP_D6 D7
DISP_D7 C6
DISP_CS1 A4
E6
DISP_CD B5
DISP_WR A3
DISP_RD C5
B4
DISP_RESET1 D6
DISP_VD C4
DIF_D0
DIF_D1
DIF_D2
DIF_D3
DIF_D4
DIF_D5
DIF_D6
DIF_D7
DIF_CS1
DIF_CS2
DIF_CD
DIF_WR
DIF_RD
DIF_HD
DIF_VD
DIF_RESET1
DIF_RESET2

Debug & JTAG

DB_TP1016
DB_TDI D19
DB_TDO E17
DB_TMS F16
DB_TCK E16
DB_TRST C19
DB_RTCK D18
DB_TP1017
DB_TP1018
DB_TP1019
DB_TP1020
DB_TP1021
TDI
TDO
TMS
TCK
TRST
RTCK

SW_TP1024
SW_TP1025
SW_TP1026
TRIG_IN E14
MON1 B13
MON2 A14
TRIG_IN
MON1
MON2

SW_TP1022
DB_ETMSYNC U8
DB_ETMCLK V8
SW_TP1023
HW_DET_MOB_TYPE1 T9
HW_DET_MOB_TYPE2 U9
HW_DET_MOB_TYPE3 W8
HW_DET_MOB_TYPE4 R9
HW_DET_BLUETOOTH W9
DB_TRACEPKT2 T10
HW_DET_BAND_SEL V9
DB_TRACEPKT4 U10
DB_TRACEPKT5 V10
DB_TRACEPKT6 R10
DB_TRACEPKT7 T11
SW_TP1029
SW_TP1031
SW_TP1032
SW_TP1033
SW_TP1034
TRACESYNC
TRACECLK
PIPESTAT0
PIPESTAT1
PIPESTAT2
TRACEPKT0
TRACEPKT1
TRACEPKT2
TRACEPKT3
TRACEPKT4
TRACEPKT5
TRACEPKT6
TRACEPKT7

Functional

NOTE:
tuning capacitors C1002 and C1003 must be seperately checked for each product

C1000 100N
GND
RF_AFC C15
C1001
R1006 30K
BB_SIN26M U12
47P
F32K
GND 18P C1002
OSC32K U13
SW_TP1035 V13
PM_RTC_INT
PM_RESET_N V12
FLASH_RESET U14
VCXOEN_UC F18
GND Z1001 32.768KHZ
GND 18P C1003
AFC
F26M
F32K
OSC32K
RTC_OUT
RESET
RSTOUT
VCXO_EN

Keypad

KP_IN0 D2
KP_IN1 D1
KP_IN2 D5
KP_IN3 F5
KP_IN4 E3
KP_IN5_OUT6 E2
BT_WAKEUP_GSM E1
KP_OUT0 D3
KP_OUT1 F4
KP_OUT2 C2
KP_OUT3 C1

MISC

CLKOUT0 H1
MMC_VCC_EN

External BUS

EBU_RAS M2
EBU_CAS M4
EBU_ADV T7
EBU_WAIT T6
EBU_SDCLKO U3
EBU_SDCLKI U4
EBU_BFCLKO R3
EBU_BFCLKI V3
EBU_CKE T3
EBU_WR U1
EBU_RD N3
EBU_BC0 M3
EBU_BC1 P2
EBU_CS0 P4
EBU_CS1 V1
EBU_CS2 T2
EBU_CS3 P3
EBU_AD0 V4
EBU_AD1 R4
EBU_AD2 W3
EBU_AD3 T5
EBU_AD4 R6
EBU_AD5 U5
EBU_AD6 W4
EBU_AD7 W5
EBU_AD8 U6
EBU_AD9 V5
EBU_AD10 V6
EBU_AD11 W6
EBU_AD12 T8
EBU_AD13 U7
EBU_AD14 V7
EBU_AD15 R7
EBU_A0 H2
EBU_A1 H3
EBU_A2 J4
EBU_A3 J2
EBU_A4 J3
EBU_A5 K1
EBU_A6 K2
EBU_A7 K3
EBU_A8 K5
EBU_A9 L2
EBU_A10 L1
EBU_A11 M1
EBU_A12 N1
EBU_A13 K4
EBU_A14 L4
EBU_A15 P1
EBU_A16 L3
EBU_A17 R1
EBU_A18 N2
EBU_A19 N4
EBU_A20 N5
EBU_A21 T1
EBU_A22 R2
EBU_A23 U2
EBU_A24 V2

KP_IN0
KP_IN1
KP_IN2
KP_IN3
KP_IN4
KP_IN5_OUT6
BT_WAKEUP_GSM
KP_OUT0
KP_OUT1
KP_OUT2
KP_OUT3
MMC_VCC_EN
RAS
CAS
ADV
WAIT
SDCLKO
BFCLKO
CKE
WR
RD
BC0
BC1
CS0_FLASH
CS1_SDRAM
CS2_FLASH
CS3_MEMORY
D(0:15)
A(0:24)

near PIN U4
R1008 22R
SDCLKI
near PIN V3
R1009 22R
BFCLKI

Serial-Interface

CC_IO L18
CC_CLK J16
CC_RST M19
SIM_IO
SIM_CLK
SIM_RST

USB_DPLUS U11
USB_DMINUS V11
USB_D+
USB_D-

USART0_RXD G1
USART0_TXD G4
USART0_RTS H4
USART0_CTS G3
AC_RX
AC_TX
AC_RTS
AC_CTS

USART1_RXD F17
USART1_TXD G18
USART1_RTS E19
USART1_CTS F15
BT_RX
BT_RTS
BT_CTS

USIF_TXD_MTSR A7
USIF_RXD_MRST B7
USIF_SCLK D9
XG1010
A_FM_STANDBY
FM_DATA_EXIST
SW_TP1011

SSC1_SCLK H15
SSC1_MTSR K18
SSC1_MRST J17

I2C_SCL C3
I2C_SDA E4
PM_INT T13
SW_TP1012
SW_TP opt.
I2C_CLK
I2C_DAT
PM_INT

I2S1_CLK0 F19
I2S1_CLK1 G16
I2S1_RX G17
I2S1_TX G15
I2S1_WA0 E18
XG1009
SW_TP1094
XG1008
XG1007
XG1004
DAI_CLOCK
BT_PCM_CLK
BT_PCM_OUT
DAI_RX_DATA
BT_PCM_IN
DAI_TX_DATA
BT_PCM_SYNC
DAI_RESET

I2S2_CLK0 J18
I2S2_CLK1 H17
I2S2_RX H19
I2S2_TX H18
I2S2_WA0 J19
I2S2_WA1 H16
I2S2_CLK1_RX
I2S2_CLK0_TX
I2S2_TX
I2S2_RX
I2S2_WA1_RX
I2S2_WA0_TX

IRDA_RX B2
IRDA_TX A2
BT_TX

FCDP_RB G2
MMCI_CD

TP1013
TVCXO
15K R1018
GND
TP1014
BREF
15K R1021
GND

2.65V
R1025 3K3
R1024 3K3

BATT+
XG1013
330K R1022
VBAT
220K R1023
GND

SR-POLARIS-FCS-BB-TOP
X1000 1
GND

D1000-1
PMB8876X-V2.1_J11

Attention:
Multiply implemented balls can be connected as desired:
PAOUT1-1 or 1-2
PAOUT2-1 or 2-2
EP_P1-1 or P1-2
EP_N1-1 or N1-2
EP_PA1-1 or PA1-2
EPREF-1 or -2

				DATE	07.07.2006
				USER	Bartenschlag
				APPR'D	
				PH RD IND LPM	
				BENQ mobile	
1	40140	07.07.2006	bar		
VERS.	CHANGE NUMBER	DATE	NAME		

Obsidian B2 Board
-Q3340-E2 V1, 900, w FM
TOP HIERARCHY LEVEL
SCHEMATIC

1:1

286763

sheet10

(Created by BOM number: A5B00920100641-40140)

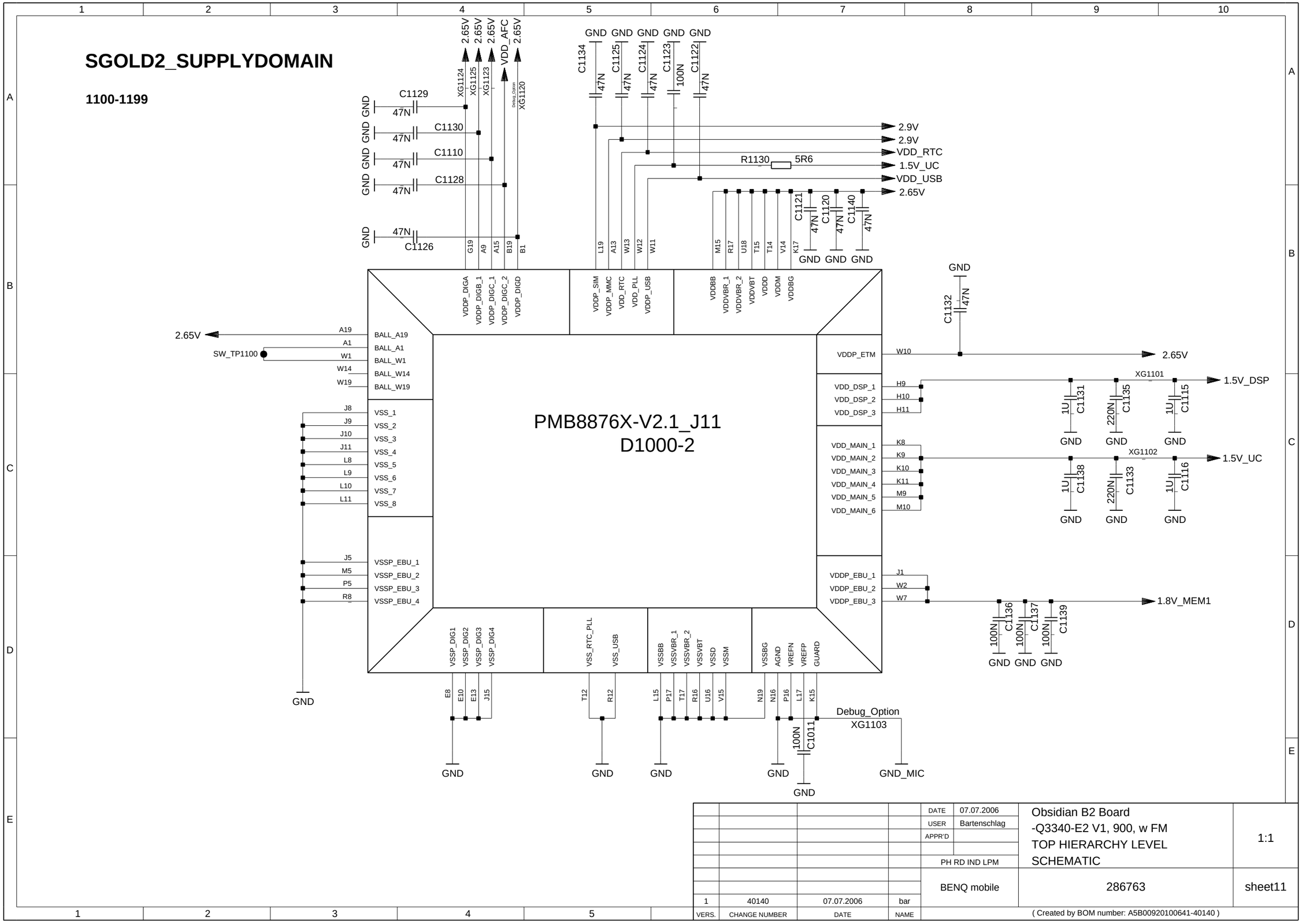

				DATE	07.07.2006	Obsidian B2 Board -Q3340-E2 V1, 900, w FM TOP HIERARCHY LEVEL SCHEMATIC
				USER	Bartenschlag	1:1
				APPR'D		
				PH RD IND LPM		
				BENQ mobile		286763
1	40140	07.07.2006	bar			sheet11
VERS.	CHANGE NUMBER	DATE	NAME			(Created by BOM number: A5B00920100641-40140)

Proprietary data, company confidential.
All rights reserved

Als Betriebsgeheimnis anvertraut
Alle Rechte vorbehalten

Propietary data, Company confidential.
all rights reserved

Als Betriebsgeheimnis anvertraut
alle Rechte vorbehalten

FLASH_SDRAM

1200-1299

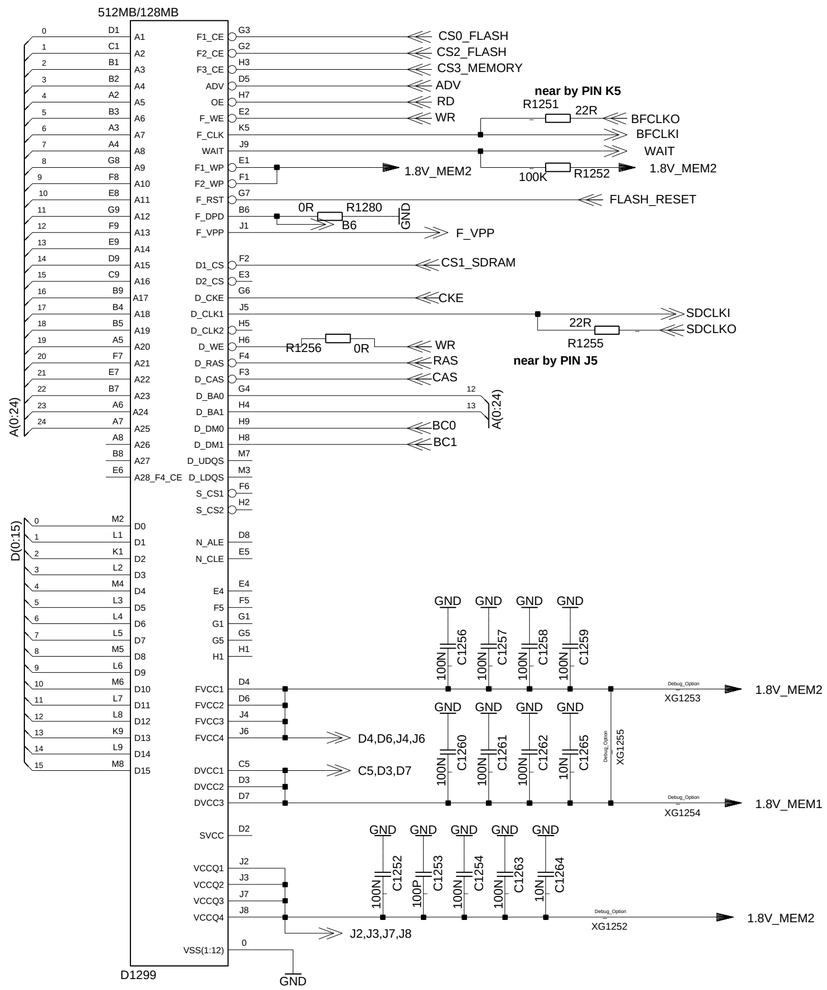

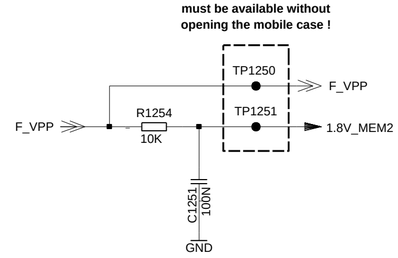

Layout Information:

1) place a capacitor (decoupling) to every power ball (VCC, VCCQ) as close as possible. There should be one capacitor for each ball.

2) connect the power plane as short as possible via the decoupling capacitor to the power ball.

3) connect ground as close as possible to the decoupling capcitor.

4) Please avoid branches by routing signals to more than one target (ball), this means for every signal expecting the power connectivity's. This is very important for the clock signals.

5) The BFCLKO & BFCLKI signal is a loop line from SGOLD2 to the Memory and back to SGOLD2. So avoid branches here as well. The same applies to SDCLKO & SDCLKI.

SW-TESTPUNKTE

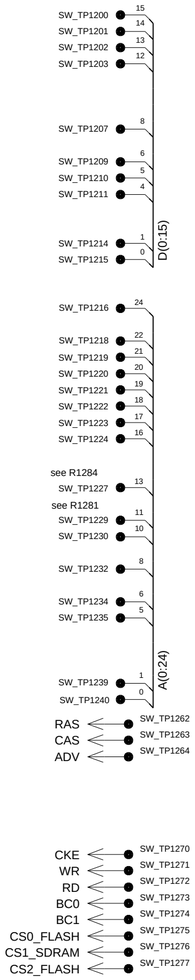

				DATE	07.07.2006
				USER	Bartenschlag
				APPR'D	
				PH RD IND LPM	
				BENQ mobile	
1	40140	07.07.2006	bar		
VERS.	CHANGE NUMBER	DATE	NAME		

Obsidian B2 Board
-Q3340-E2 V1, 900, w FM
TOP HIERARCHY LEVEL
SCHEMATIC

1:1

286763

sheet12

(Created by BOM number: A5B00920100641-40140)

MOZART

1300-1399

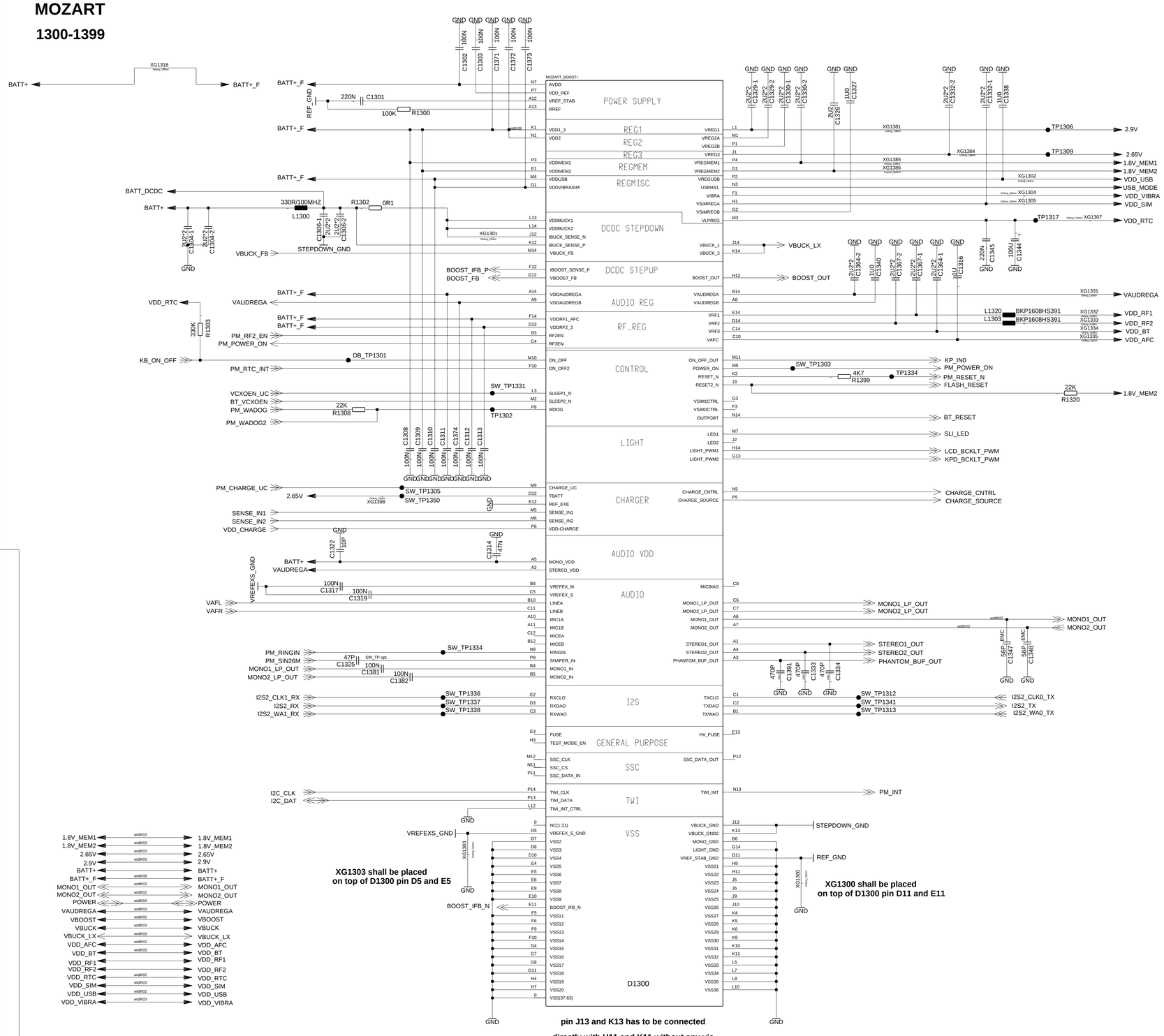

XG1303 shall be placed on top of D1300 pin D5 and E5

XG1300 shall be placed on top of D1300 pin D11 and E11

pin J13 and K13 has to be connected directly with H11 and K11 without any via

short as possible at the ASIC

				DATE	07.07.2006
				USER	Bartenschlag
				APPR'D	
				PH RD IND LPM	
1	40140	07.07.2006	bar	BENQ mobile	

Obsidian B2 Board
-Q3340-E2 V1, 900, w FM
TOP HIERARCHY LEVEL
SCHEMATIC

1:1

286763

sheet13

(Created by BOM number: AS800920100641-40140)

Sin nuestra expresa autorizacion, queda terminantemente prohibida la reproduccion total o parcial de este documento, asi como su uso indebido y/o su entrega o comunicacion terceros. De los infractores se exigira el correspondiente resarcimiento de daños y perjuicios. Se reserva todos los direchos para el caso de la concesion de patente de invencion o el registro de Modelo Industrial.

Copying of this document, and giving it to others and the use or communication of the contents thereof, are forbidden without express authority. Offenders are liable to the payment of damages. All rights are reserved in the event of the grant of a Patent or the registration of a utility model or Design.

Weitergabe sowie Vervielfaeltigung dieser Unterlage, Verwertung und Mitteilung ihres Inhalts nicht gestattet, soweit nicht ausdrueklich zugestanden. Zuwiderhandlungen Verpflichten zu Schadenersatz. Alle Rechte fuer den Fall der Patenterteilung oder GM-Eintragung vorbehalten

Proprietary data, company confidential.
All rights reserved

Als Betriebsgeheimnis anvertraut
Alle Rechte vorbehalten

BATTERY_CONNECTOR

1400-1449

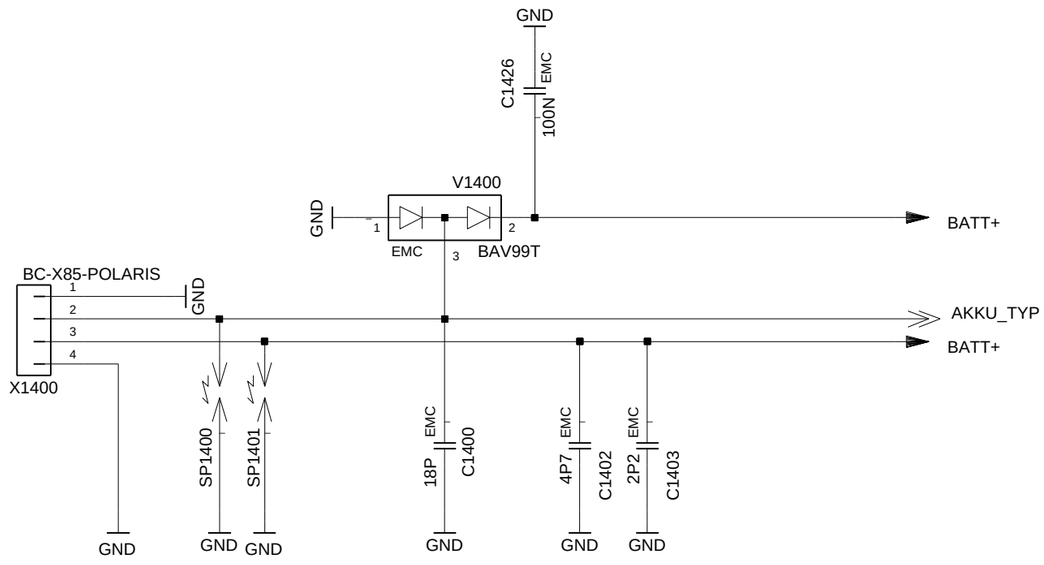

				DATE	07.07.2006
				USER	Bartenschlag
				APPR'D	
				PH RD IND LPM	
				BENQ mobile	
1	40140	07.07.2006	bar		
VERS.	CHANGE NUMBER	DATE	NAME		

Obsidian B2 Board
-Q3340-E2 V1, 900, w FM
TOP HIERARCHY LEVEL
SCHEMATIC

1:1

286763

sheet14

(Created by BOM number: A5B00920100641-40140)

Propietary data, Company confidential.
all rights reserved

Als Betriebsgeheimnis anvertraut
alle Rechte vorbehalten

IO_CONNECTOR

1500-1599

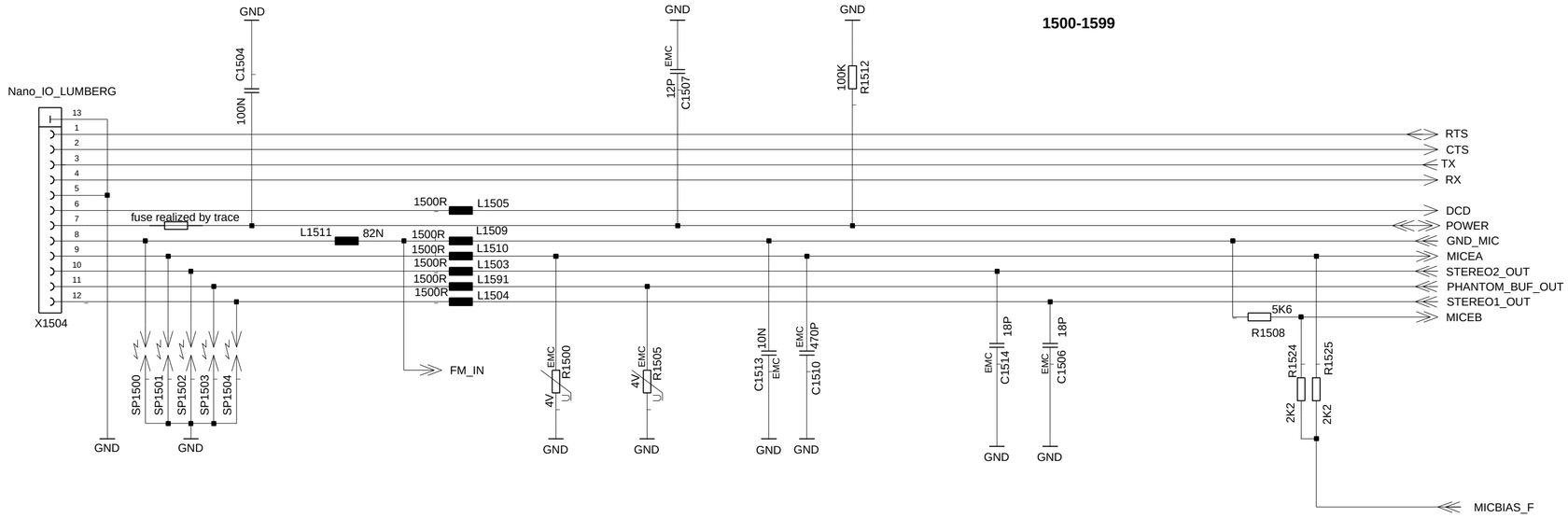

				DATE	07.07.2006
				USER	Bartenschlag
				APPR'D	
				PH RD IND LPM	
1	40140	07.07.2006	bar	BENQ mobile	
VERS.	CHANGE NUMBER	DATE	NAME		

Obsidian B2 Board
-Q3340-E2 V1, 900, w FM
TOP HIERARCHY LEVEL
SCHEMATIC

1:1

286763

sheet15

(Created by BOM number: A5B00920100641-40140)

Proprietary data, company confidential.
All rights reserved

SIM_CONNECTOR

1600-1659

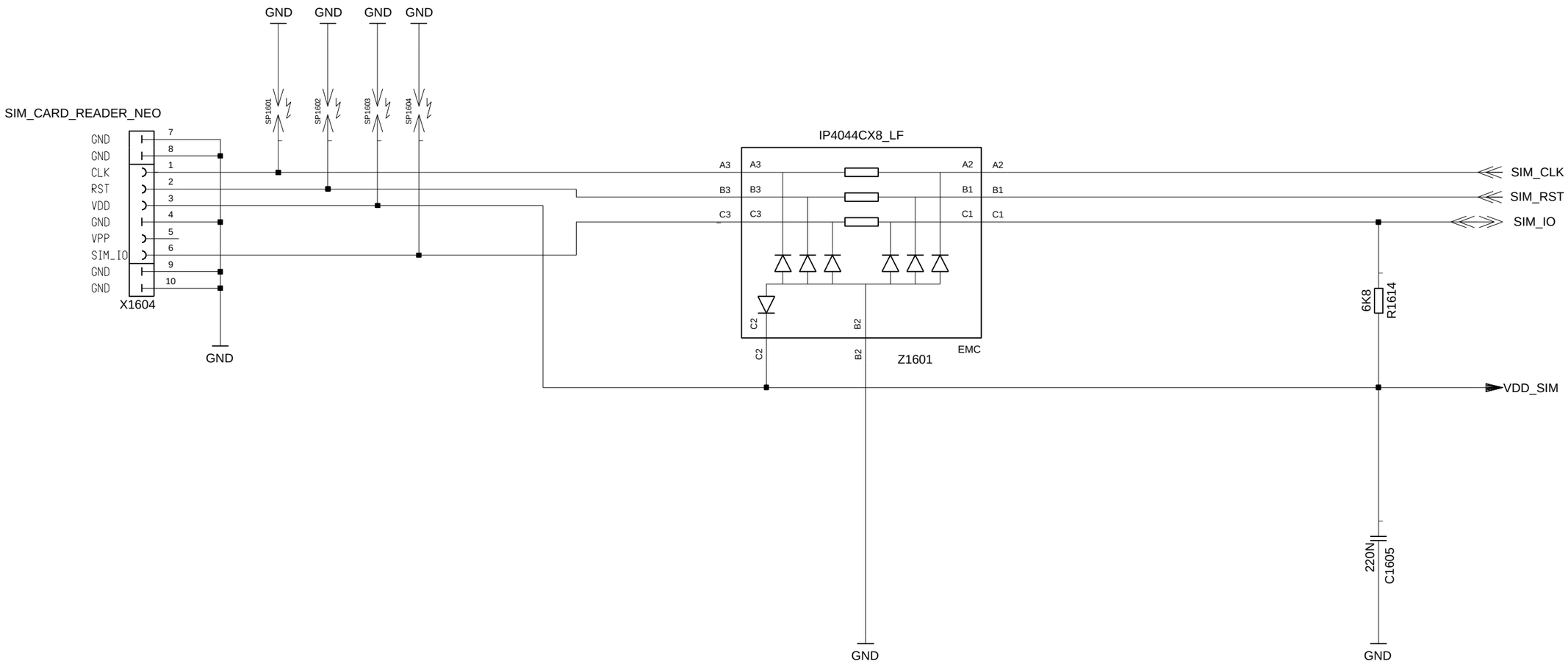

				DATE	07.07.2006
				USER	Bartenschlag
				APPR'D	
				PH RD IND LPM	
				BENQ mobile	
1	40140	07.07.2006	bar		
VERS.	CHANGE NUMBER	DATE	NAME		

Obsidian B2 Board
-Q3340-E2 V1, 900, w FM
TOP HIERARCHY LEVEL
SCHEMATIC

1:1

286763

sheet16

(Created by BOM number: A5B00920100641-40140)

Als Betriebsgeheimnis anvertraut
Alle Rechte vorbehalten

Proprietary data, company confidential.
All rights reserved

Als Betriebsgeheimnis anvertraut
Alle Rechte vorbehalten

SPEAKER

1700-1759

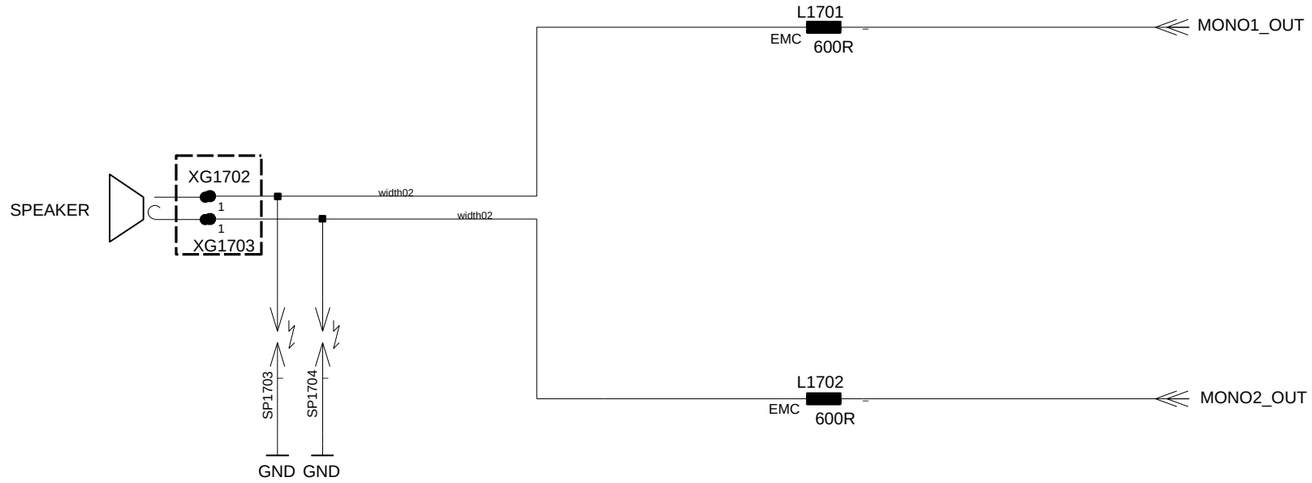

				DATE	07.07.2006	Obsidian B2 Board -Q3340-E2 V1, 900, w FM TOP HIERARCHY LEVEL SCHEMATIC
				USER	Bartenschlag	
				APPR'D		
				PH RD IND LPM		
				BENQ mobile		286763
1	40140	07.07.2006	bar			
VERS.	CHANGE NUMBER	DATE	NAME	(Created by BOM number: A5B00920100641-40140)		

1:1

sheet17

Proprietary data, company confidential.
All rights reserved

FM-RADIO

1800-1899

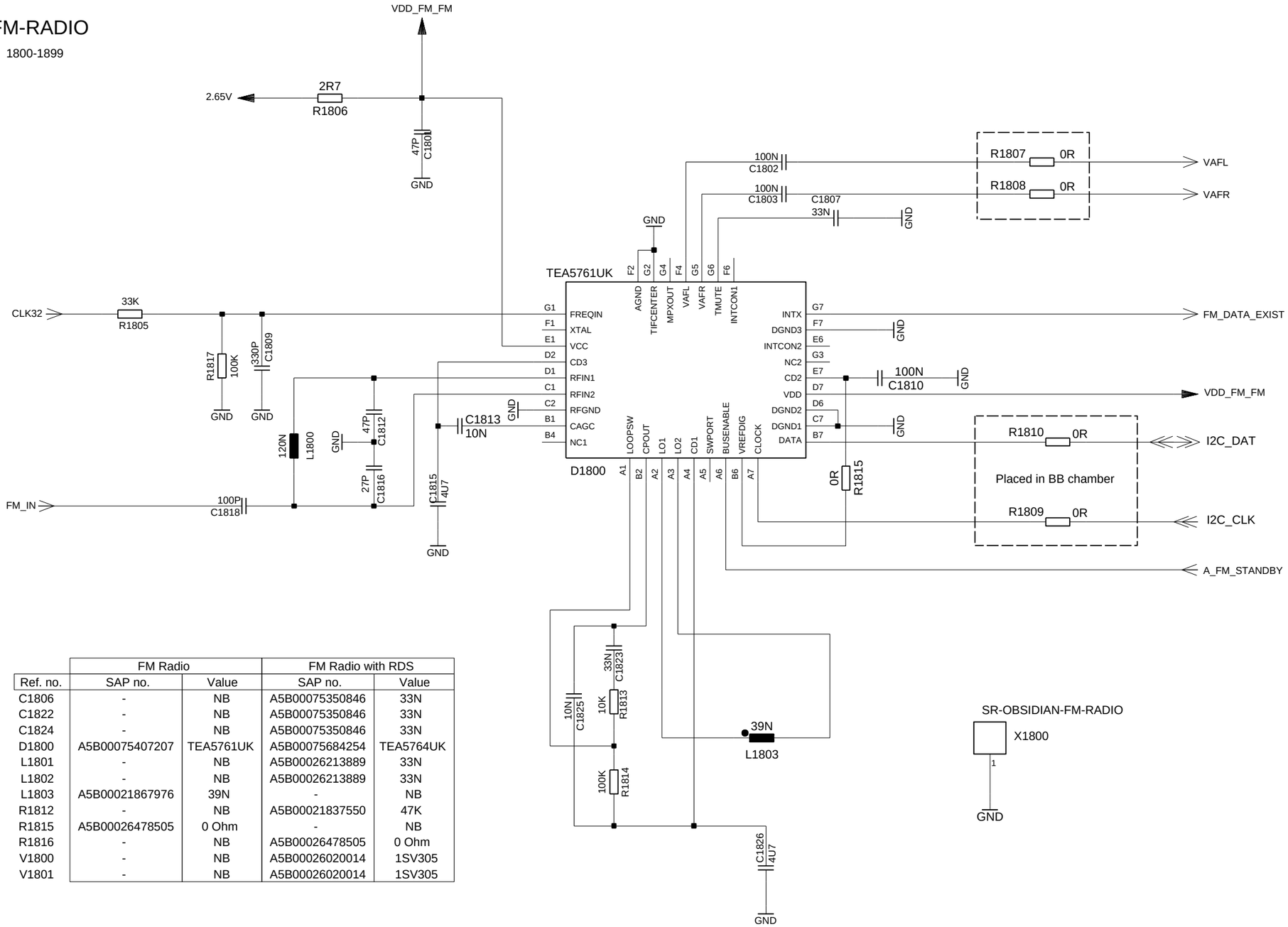

	FM Radio		FM Radio with RDS	
Ref. no.	SAP no.	Value	SAP no.	Value
C1806	-	NB	A5B00075350846	33N
C1822	-	NB	A5B00075350846	33N
C1824	-	NB	A5B00075350846	33N
D1800	A5B00075407207	TEA5761UK	A5B00075684254	TEA5764UK
L1801	-	NB	A5B00026213889	33N
L1802	-	NB	A5B00026213889	33N
L1803	A5B00021867976	39N	-	NB
R1812	-	NB	A5B00021837550	47K
R1815	A5B00026478505	0 Ohm	-	NB
R1816	-	NB	A5B00026478505	0 Ohm
V1800	-	NB	A5B00026020014	1SV305
V1801	-	NB	A5B00026020014	1SV305

VERS.	CHANGE NUMBER	DATE	NAME		
1	40140	07.07.2006	bar	DATE	07.07.2006
				USER	Bartenschlag
				APPR'D	
				PH RD IND LPM	
				BENQ mobile	

Obsidian B2 Board
-Q3340-E2 V1, 900, w FM
TOP HIERARCHY LEVEL
SCHEMATIC

286763

1:1

sheet18

(Created by BOM number: A5B00920100641-40140)

Als Betriebsgeheimnis anvertraut
Alle Rechte vorbehalten

Proprietary data, company confidential.
All rights reserved

MICROPHONE_CIRCUIT_1

1900-1999

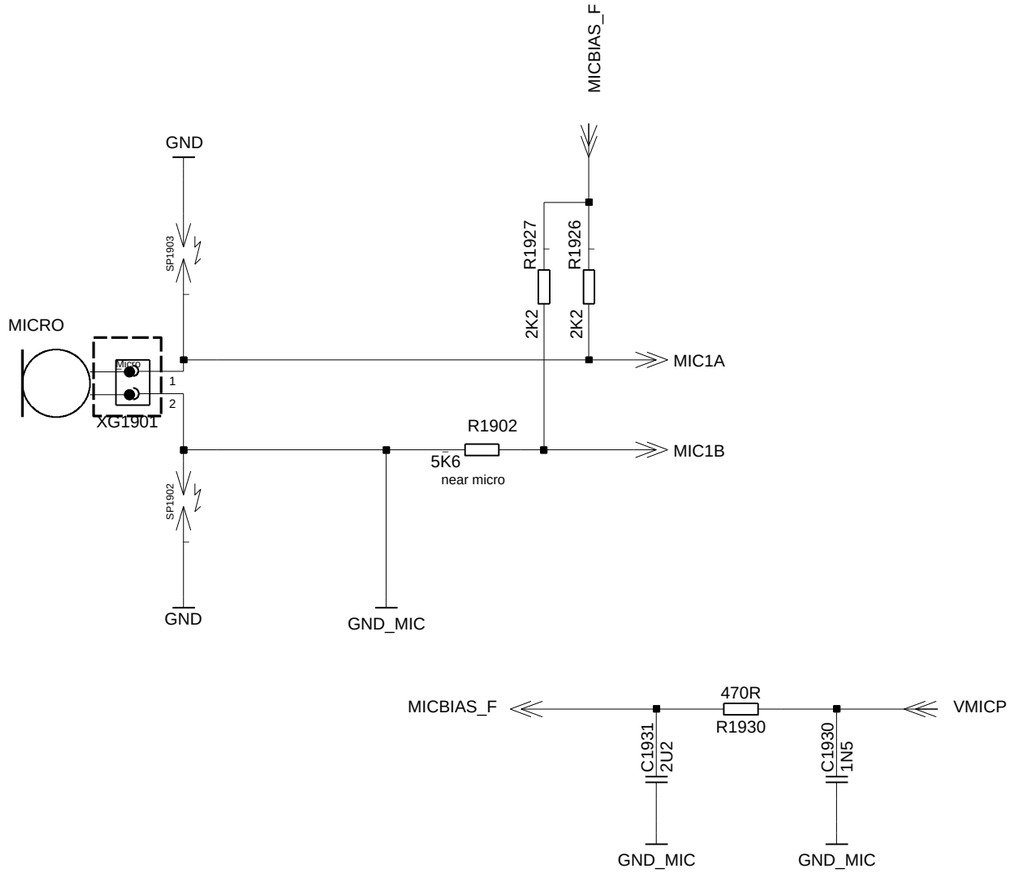

Als Betriebsgeheimnis anvertraut
Alle Rechte vorbehalten

				DATE	07.07.2006
				USER	Bartenschlag
				APPR'D	
				PH RD IND LPM	
				BENQ mobile	
1	40140	07.07.2006	bar		
VERS.	CHANGE NUMBER	DATE	NAME		

Obsidian B2 Board
-Q3340-E2 V1, 900, w FM
TOP HIERARCHY LEVEL
SCHEMATIC

1:1

286763

sheet19

(Created by BOM number: A5B00920100641-40140)

Proprietary data, company confidential.
All rights reserved

VIBRA

2100-2125

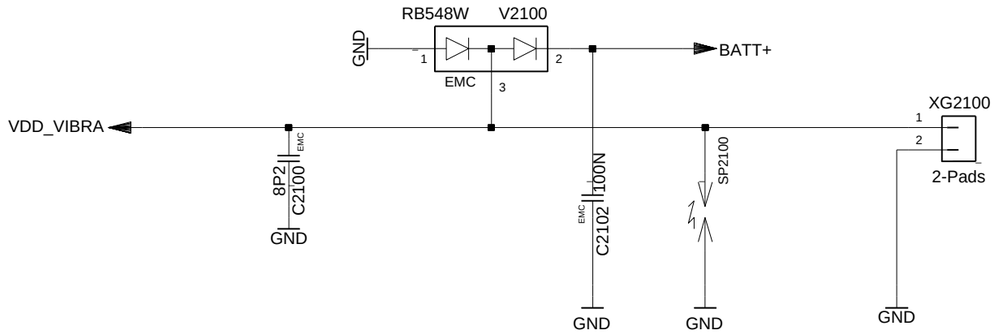

Als Betriebsgeheimnis anvertraut
Alle Rechte vorbehalten

				DATE	07.07.2006
				USER	Bartenschlag
				APPR'D	
				PH RD IND LPM	
				BENQ mobile	
1	40140	07.07.2006	bar		
VERS.	CHANGE NUMBER	DATE	NAME		

Obsidian B2 Board
-Q3340-E2 V1, 900, w FM
TOP HIERARCHY LEVEL
SCHEMATIC

1:1

286763

sheet21

(Created by BOM number: A5B00920100641-40140)

Propietary data, Company confidential.
all rights reserved

Als Betriebsgeheimnis anvertraut
alle Rechte vorbehalten

DISPLAY_CONNECTOR

2200-2299

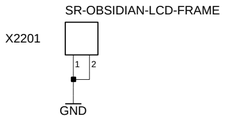

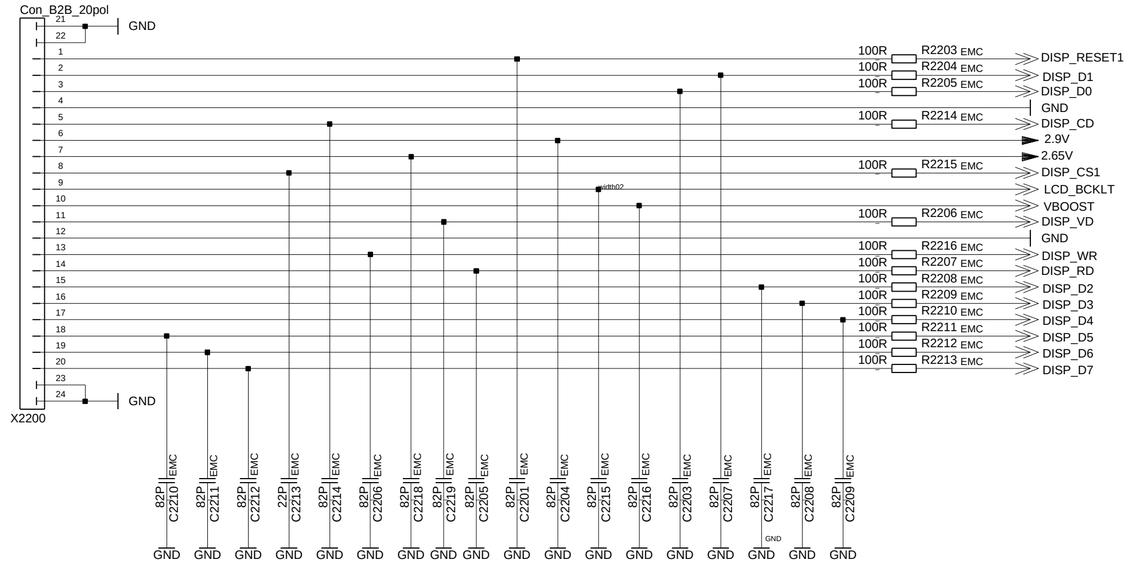

				DATE	07.07.2006
				USER	Bartenschlag
				APPR'D	
				PH RD IND LPM	
				BENQ mobile	
1	40140	07.07.2006	bar		
VERS.	CHANGE NUMBER	DATE	NAME	(Created by BOM number: A5B00920100641-40140)	

Obsidian B2 Board
-Q3340-E2 V1, 900, w FM
TOP HIERARCHY LEVEL
SCHEMATIC

1:1

286763

sheet22

Proprietary data, company confidential.
All rights reserved

DISPLAY BACKLIGHT CONTROL

2300-2399

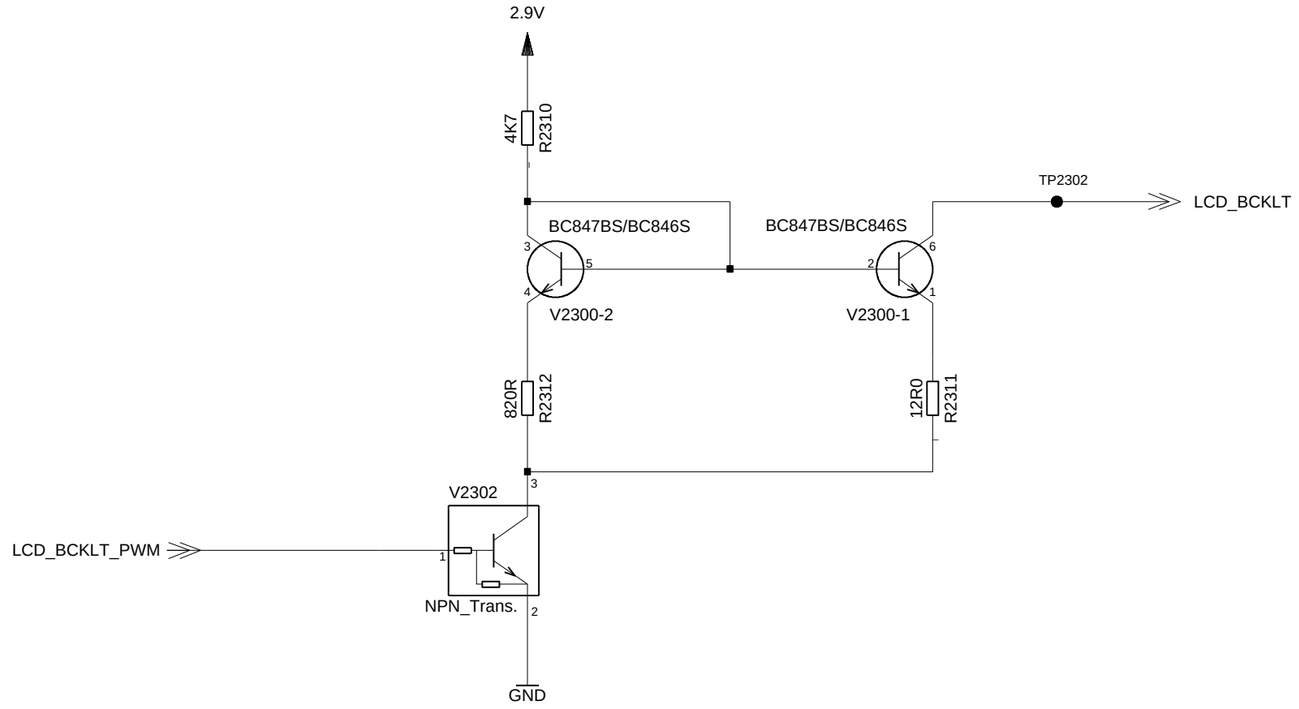

				DATE	07.07.2006
				USER	Bartenschlag
				APPR'D	
				PH RD IND LPM	
				BENQ mobile	
1	40140	07.07.2006	bar		
VERS.	CHANGE NUMBER	DATE	NAME		

Obsidian B2 Board
-Q3340-E2 V1, 900, w FM
TOP HIERARCHY LEVEL
SCHEMATIC

1:1

286763

sheet23

(Created by BOM number: A5B00920100641-40140)

Als Betriebsgeheimnis anvertraut
Alle Rechte vorbehalten

Proprietary data, company confidential.
All rights reserved

Als Betriebsgeheimnis anvertraut
Alle Rechte vorbehalten

1	2	3	4	5

SLI LED

2400-2499

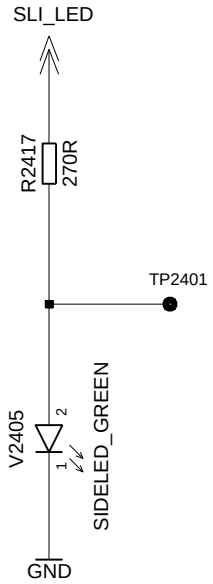

				DATE	07.07.2006	Obsidian B2 Board -Q3340-E2 V1, 900, w FM TOP HIERARCHY LEVEL SCHEMATIC	1:1
				USER	Bartenschlag		
				APPR'D			
				PH RD IND LPM			
				BENQ mobile		286763	sheet24
1	40140	07.07.2006	bar				
VERS.	CHANGE NUMBER	DATE	NAME	(Created by BOM number: A5B00920100641-40140)			

Proprietary data, company confidential.
All rights reserved

Als Betriebsgeheimnis anvertraut
Alle Rechte vorbehalten

MMI_CONNECTOR

BOARD TO BOARD CONNECTOR

2700-2749

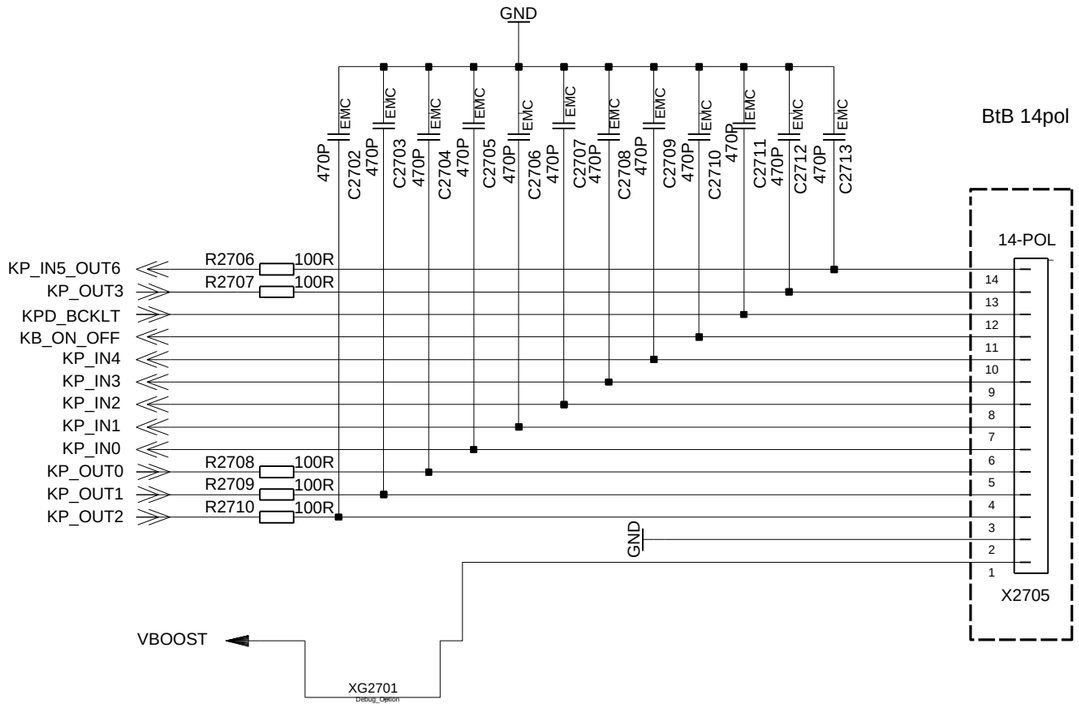

LEFT

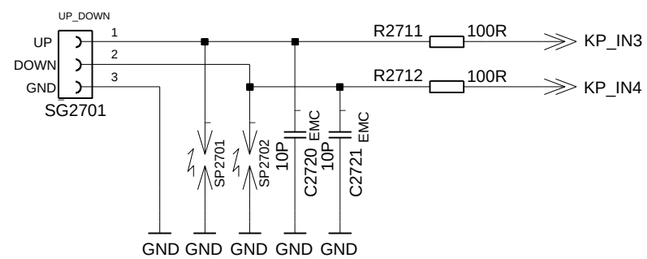

				DATE	07.07.2006
				USER	Bartenschlag
				APPR'D	
				PH RD IND LPM	
				BENQ mobile	
1	40140	07.07.2006	bar		
VERS.	CHANGE NUMBER	DATE	NAME		

Obsidian B2 Board
-Q3340-E2 V1, 900, w FM
TOP HIERARCHY LEVEL
SCHEMATIC

1:1

286763

sheet27

(Created by BOM number: A5B00920100641-40140)

Proprietary data, company confidential.
All rights reserved

Als Betriebsgeheimnis anvertraut
Alle Rechte vorbehalten

KEYPAD_BACKLIGHT

2800-2899

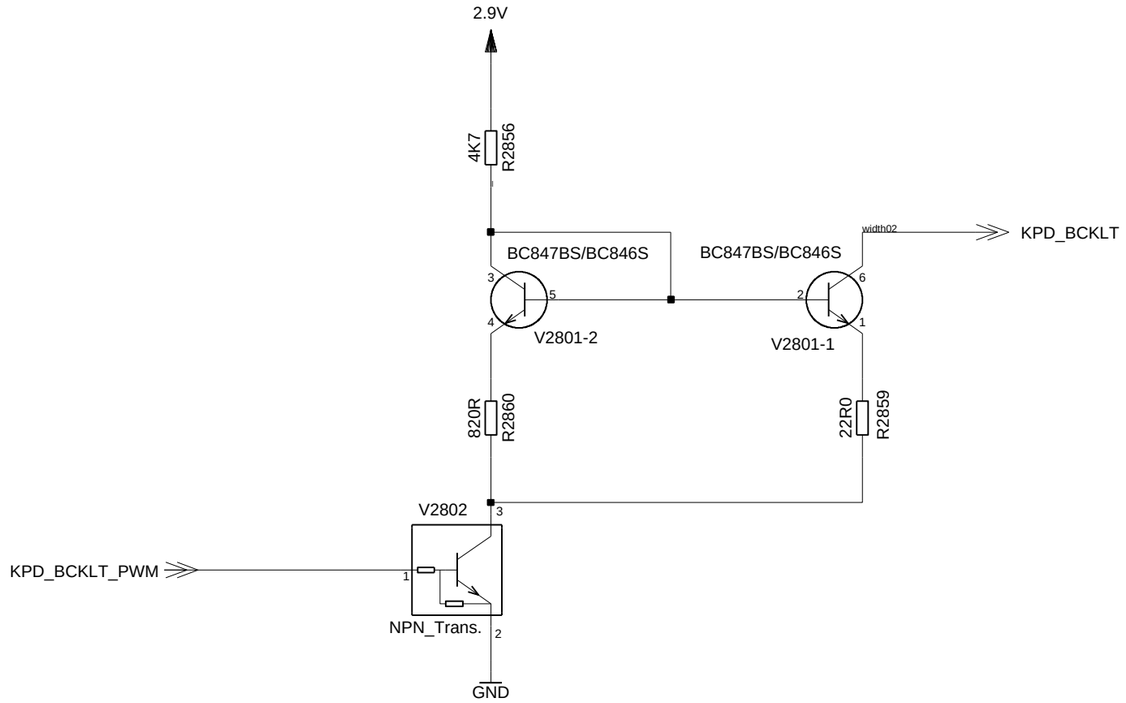

				DATE	07.07.2006	Obsidian B2 Board -Q3340-E2 V1, 900, w FM TOP HIERARCHY LEVEL SCHEMATIC	1:1
				USER	Bartenschlag		
				APPR'D			
				PH RD IND LPM			
				BENQ mobile		286763	sheet28
1	40140	07.07.2006	bar				
VERS.	CHANGE NUMBER	DATE	NAME	(Created by BOM number: A5B00920100641-40140)			

Propietary data, Company confidential.
all rights reserved

Camera Interface

3500-3579

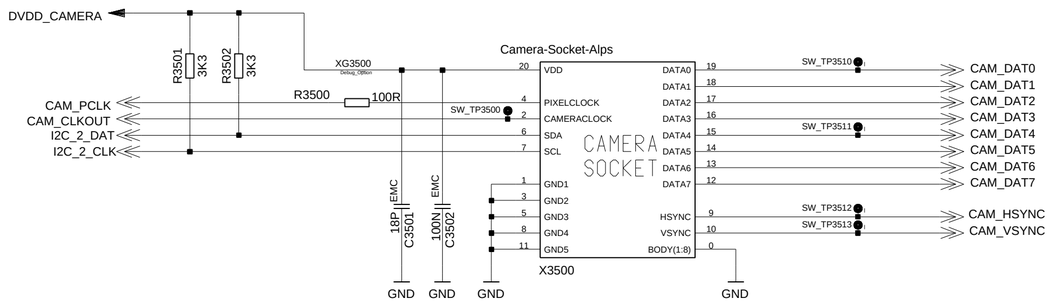

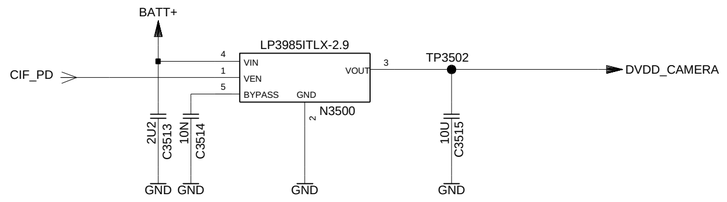

				DATE	07.07.2006
				USER	Bartenschlag
				APPR'D	
				PH RD IND LPM	
				BENQ mobile	
1	40140	07.07.2006	bar		
VERS.	CHANGE NUMBER	DATE	NAME	(Created by BOM number: A5B00920100641-40140)	

Obsidian B2 Board
-Q3340-E2 V1, 900, w FM
TOP HIERARCHY LEVEL
SCHEMATIC

286763

1:1

sheet35

Als Betriebsgeheimnis anvertraut
alle Rechte vorbehalten

Proprietary data, company confidential.
All rights reserved

MMC READER

4800-4899

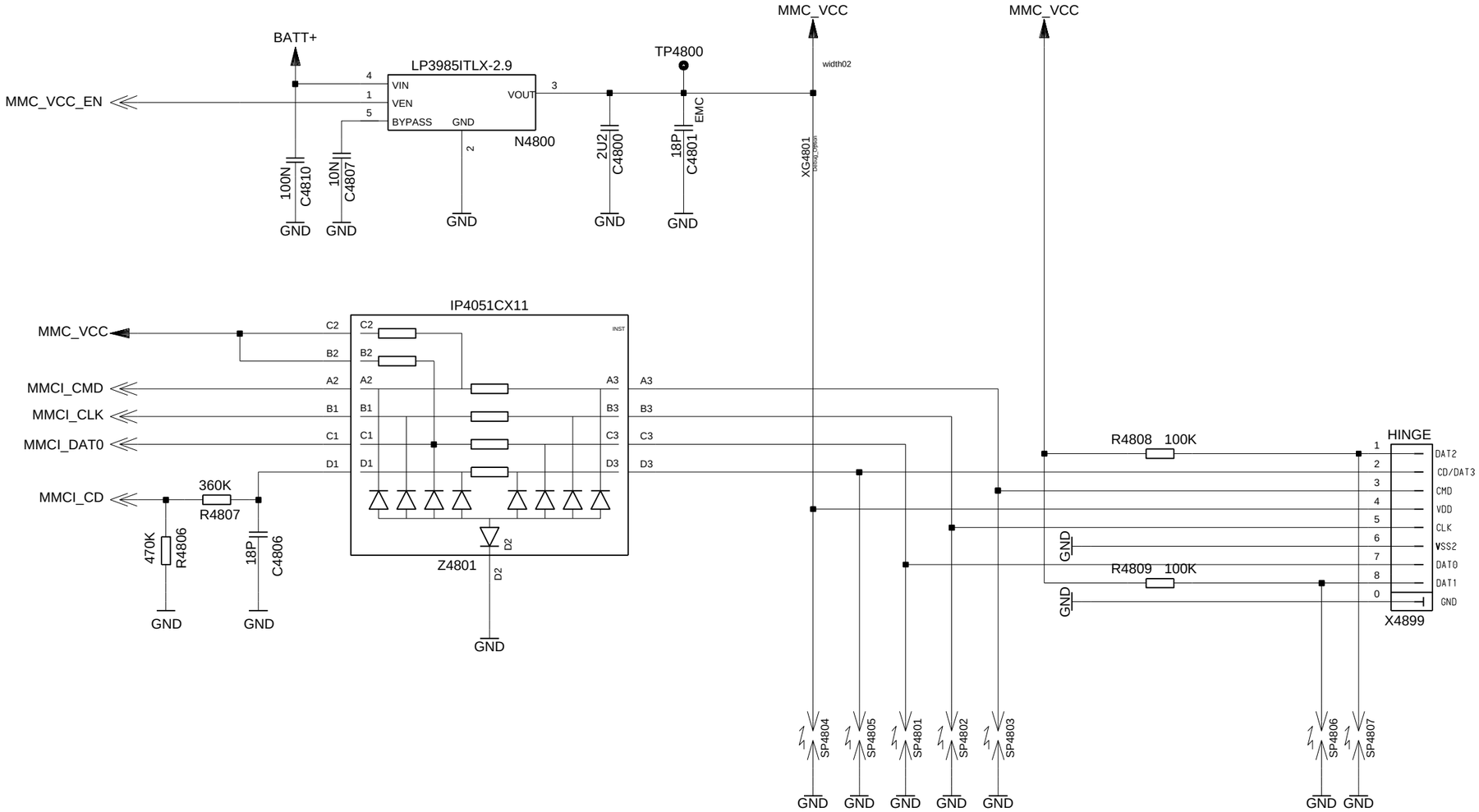

				DATE	07.07.2006
				USER	Bartenschlag
				APPR'D	
				PH RD IND LPM	
				BENQ mobile	286763
1	40140	07.07.2006	bar		
VERS.	CHANGE NUMBER	DATE	NAME	(Created by BOM number: A5B00920100641-40140)	

Obsidian B2 Board
-Q3340-E2 V1, 900, w FM
TOP HIERARCHY LEVEL
SCHEMATIC

1:1

sheet48

Als Betriebsgeheimnis anvertraut
Alle Rechte vorbehalten

Proprietary data, company confidential.
All rights reserved

Als Betriebsgeheimnis anvertraut
Alle Rechte vorbehalten

BLUETOOTH Solution 2

5100-5199

Interchange
point to
BT-Antenna X75

BRF6150

D5100

Z5100

BP-Filter_2450MHz

				DATE	07.07.2006
				USER	Bartenschlag
				APPR'D	
				PH RD IND LPM	
1	40140	07.07.2006	bar	BENQ mobile	286763
VERS.	CHANGE NUMBER	DATE	NAME	(Created by BOM number: A5B00920100641-40140)	

Obsidian B2 Board
-Q3340-E2 V1, 900, w FM
TOP HIERARCHY LEVEL
SCHEMATIC

1:1

sheet51

Propietary data, Company confidential.
all rights reserved

Als Betriebsgeheimnis anvertraut
alle Rechte vorbehalten

RF_HITACHI_BRIGHT_6PLA

5930-5999

HWXQ521

D5930

ANTENNA, DCS_PCS_TX, GSM_EGSM_TX, NC1, NC2, GND(1:21), VSW1, VSW2
PCS1900RX1, PCS1900RX2, DCS1800RX1, DCS1800RX2, EGSM900RX1, EGSM900RX2, GSM850RX1, GSM850RX2

0R R5930 — 50_Ohm — 8N2 L5931 — 3P9 C5933 — 3P3 C5932

FEMC1 — FEMC2

27P C5936 — 27P C5937

68R R5937 — 100R R5938 — 100R R5939 — 47R R5940 — 120R R5941 — 120R R5942

BRIGHT6PL

D5932

PCSLNAI, PCSLNAIB, DCSPCSGND, DCSLNAI, DCSLNAIB, DCSGSM1GND, GSM1LNAI, GSM1LNAIB, GSM1GSM0GND, GSM0LNAI, GSM0LNAIB, GSM0GND, GNDLNA, DMIXIN, DMIXINB

PCSGND, VCCLNA, GNDMIX, VCCMIX, CAPIB, CAPI, CAPQ, CAPQB, VCCRFLO, GNDRFLO, NC1, VCCBB, VCCRFVCO, GNDRFVCO, GNDBB, GNDRFSYN, VCCRFSYN, VCCVCXOR

XOP, XON, VCXTCXO, VOUTEF1, VOUTEF2, GNDVCXO, AFC, DCXOOUT, VCCVCXO, GNDVCXOR, GNDLOGIC, VCCLOGIC, IOUT_IIN, IOUTB_IINB, QOUT_QIN, QOUTB_QINB, NC2, LE, SDATA, CLK

GNDTX1, VCCTX1, RAMPDAC, EAMPIB, LDO_CONT, FEMC1, FEMC2, VCCFEMC, TXBAND, GNDTX2, VCCTX2, TXON, TXMODE, VCCTXVCO, GNDTXVCOD, TXOUTG, GNDTXVCOD_B, TXOUTD, GNDTXVCOD_A

VDD_RF2, VDD_RF1, VDD_RF2, VDD_RF1, VDD_RF2

2U2 C5934 — 2U2 C5935

27P C5945 — 1N C5951 — 27P C5946 — 100N C5947 — 1N C5949 — 100N C5950 — R5933 0R

width03

Z5930 26MHZ — 180P C5953 — 0R R5994

100K R5982 — 100K R5983 — 100K R5984 — RF_AFC — TVCXO

100N C5960 — 100N C5961 — 22K R5967

2K2 R5959 — 2K2 R5960

PM_SIN26M — BT_SIN26M — BB_SIN26M

TP5901

VDD_RF1 — VDD_RF2

SW_TP5933 RF_I — SW_TP5934 RF_IX — SW_TP5936 RF_Q — SW_TP5937 RF_QX — SW_TP5930 RF_STR — SW_TP5931 RF_DAT — SW_TP5932 RF_CLK

100N C5958 — 100N C5959

RF_RAMP1

FEMC1 — FEMC2 — TXBAND

XG5932 26MHZ_CMOS

D5933

PF09036B

NC(1:25), COUPLER_OUT_XCS, POUT_XCS, COMPLEX_XCS, COUPLER_OUT_GSM, POUT_GSM, COMPLEX_GSM, VMODE, VLDO, VBAT2, VBAT1
GND(1:7), GSM, XCS, TX_ON, BS, VRAMP, TEMPSENSE, VREG

SW_TP5935

0R R5945 — TP5933 — TXBAND

27P C5939

VDD_RF2

BATT+

100N C5942

0R R5970

0R R5974

0R R5975

TP5932

BATT+ — 150U C5992

SR-DME-RF — X5900

				DATE	07.07.2006
				USER	Bartenschlag
				APPR'D	
				PH RD IND LPM	
				BENQ mobile	
1	40140	07.07.2006	bar		
VERS.	CHANGE NUMBER	DATE	NAME		

Obsidian B2 Board
-Q3340-E2 V1, 900, w FM
TOP HIERARCHY LEVEL
SCHEMATIC

1:1

286763

sheet59

(Created by BOM number: A5B00920100641-40140)

Proprietary data, company confidential.
All rights reserved

ANTENNA _CIRCUIT

870 - 884

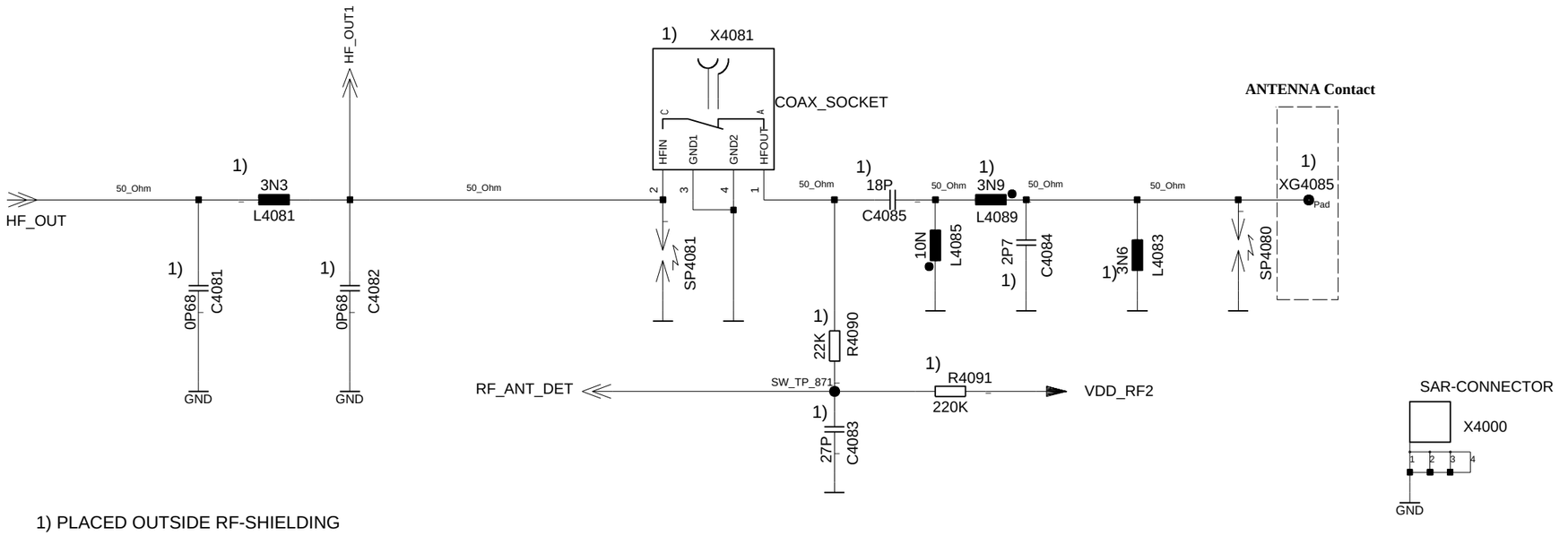

1) PLACED OUTSIDE RF-SHIELDING

				DATE	07.07.2006
				USER	Bartenschlag
				APPR'D	
				PH RD IND LPM	
				BENQ mobile	
1	40140	07.07.2006	bar		
VERS.	CHANGE NUMBER	DATE	NAME		

Obsidian B2 Board
-Q3340-E2 V1, 900, w FM
TOP HIERARCHY LEVEL
SCHEMATIC

1:1

286763

sheet72

(Created by BOM number: A5B00920100641-40140)

Als Betriebsgeheimnis anvertraut
Alle Rechte vorbehalten

PROPRIETARY DATA, COMPANY CONFIDENTIAL
ALL RIGHTS RESERVED

ALS BETRIEBSGEHEIMNIS ANVERTRAUT
ALLE RECHTE VORBEHALTEN

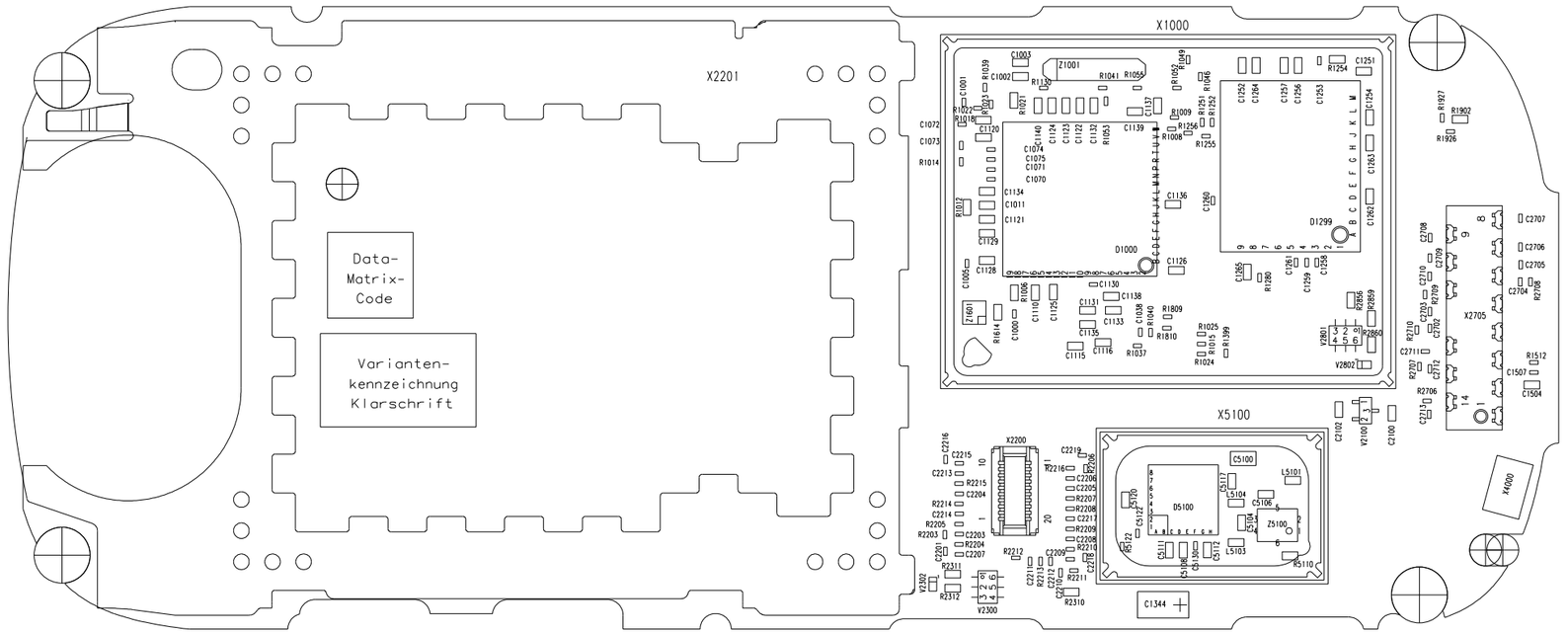

C1000	7B	C1261	8B	C5112	8C	R1926	9A
C1001	6A	C1262	8A	C5117	8B	R1927	9A
C1002	7A	C1263	8A	C5120	7B	R2203	6B
C1003	7A	C1264	8A	C5122	7B	R2204	6C
C1005	6B	C1265	8B	C5130	7C	R2205	6B
C1011	6A	C1344	7C	D1000	7B	R2206	7B
C1038	7B	C1504	9B	D1299	8A	R2207	7B
C1070	6A	C1507	9B	D5100	7B	R2208	7B
C1071	6A	C2100	8B	L5101	8B	R2209	7B
C1072	6A	C2102	8B	L5103	8C	R2210	7C
C1073	6A	C2201	6C	L5104	8B	R2211	7C
C1074	6A	C2203	6B	R1006	7B	R2212	7C
C1075	6A	C2204	6B	R1008	7A	R2213	7C
C1110	7B	C2205	7B	R1009	7A	R2214	6B
C1115	7B	C2206	7B	R1012	6A	R2215	6B
C1116	7B	C2207	6C	R1014	6A	R2216	7B
C1120	6A	C2208	7B	R1015	8B	R2310	7C
C1121	6A	C2209	7C	R1018	6A	R2311	6C
C1122	7A	C2210	7C	R1021	7A	R2312	6C
C1123	7A	C2211	7C	R1022	6A	R2706	9B
C1124	7A	C2212	7C	R1023	6A	R2707	9B
C1125	7B	C2213	6B	R1024	7B	R2708	9B
C1126	7B	C2214	6B	R1025	7B	R2709	9B
C1128	6B	C2215	6B	R1037	7B	R2710	9B
C1129	6A	C2216	6B	R1039	6A	R2856	8B
C1130	7B	C2217	7B	R1040	7B	R2859	8B
C1131	7B	C2218	7C	R1041	7A	R2860	8B
C1132	7A	C2219	7B	R1046	7A	R5110	8C
C1133	7B	C2702	9B	R1049	7A	R5122	7C
C1134	6A	C2703	9B	R1052	7A	V2100	8B
C1135	7B	C2704	9B	R1053	7A	V2300	6C
C1136	7A	C2705	9B	R1055	7A	V2302	6C
C1137	7A	C2706	9A	R1130	7A	V2801	8B
C1138	7B	C2707	9A	R1251	7A	V2802	8B
C1139	7A	C2708	9A	R1252	8A	X1000	6B
C1140	7A	C2709	9B	R1254	8A	X2200	6B
C1251	8A	C2710	9B	R1255	7A	X2201	6C
C1252	8A	C2711	9B	R1256	7A	X2705	9B
C1253	8A	C2712	9B	R1280	8B	X4000	9B
C1254	8A	C2713	9B	R1399	8B	X5100	7C
C1256	8A	C5100	8B	R1512	9B	Z1001	7A
C1257	8A	C5104	8B	R1614	6B	Z1601	6B
C1258	8B	C5106	8B	R1809	7B	Z5100	8B
C1259	8B	C5108	7C	R1810	7B		
C1260	8A	C5111	7C	R1902	9A		

Achtung : Hoehenprofil C24___-___-___-___-42 (gilt nur fuer Entwicklung)
Liefervarianten siehe : V24851-Z2000-A1-*-35

				DATE	07.07.2006	Obsidian B2 Board -Q3340-E2 V1, 900, w FM WIRING DIAGRAMM (SOLDER SIDE 1)
				NAME	Bartenschl.	
				APPR'D		
				STD		
				PH RD IND LPM		
				BENQ mobile		286764
1	40140	07.07.2006	bar			
VERS.	CHANGE NUMBER	DATE	NAME	(Created by BOM number: A5B00920100641-40140)		

3:1

SHEET 1+

PROPRIETARY DATA, COMPANY CONFIDENTIAL
ALL RIGHTS RESERVED

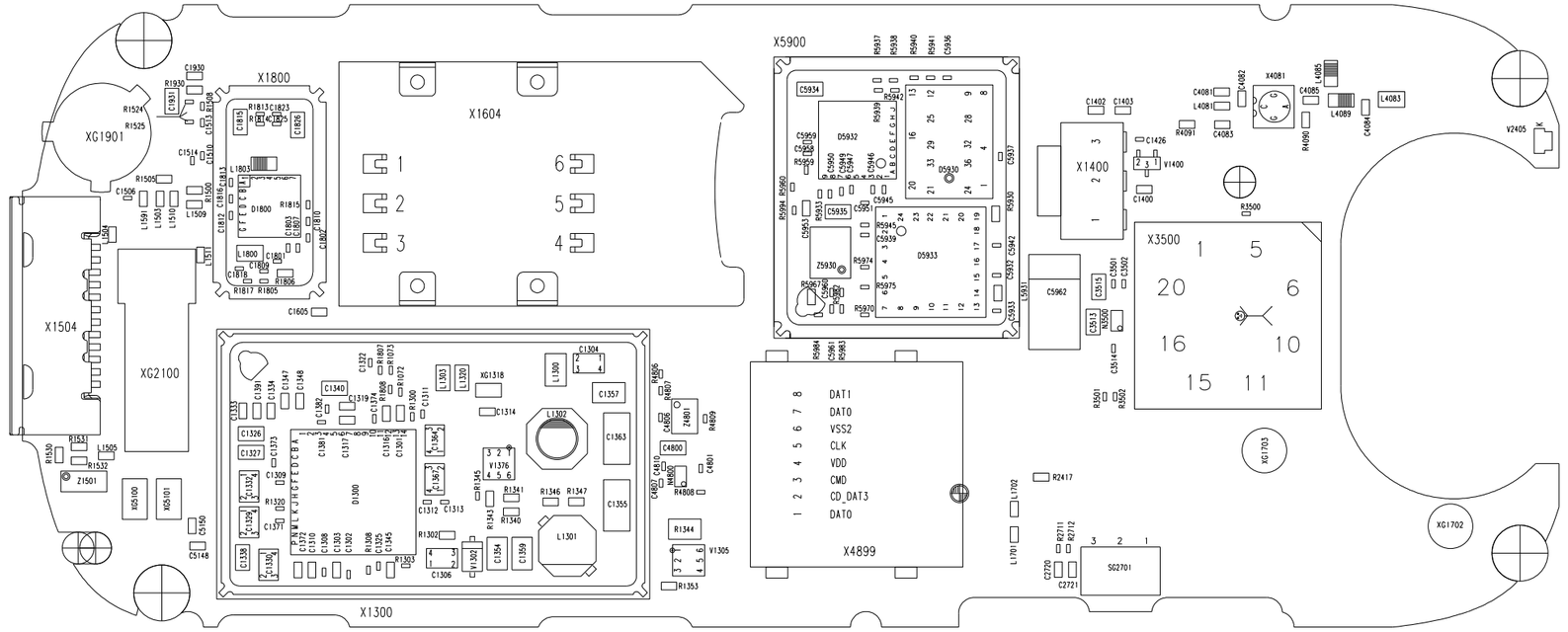

C1301	4B	C1403	7A	C5935	6A	R1072	4B	R5933	6A		
C1302	3C	C1426	7A	C5936	6A	R1073	3B	R5937	6A		
C1303	3C	C1506	2A	C5937	7A	R1300	4B	R5938	6A		
C1304	5B	C1510	3A	C5939	6A	R1302	4B	R5939	6A		
C1306	4C	C1513	3A	C5942	7A	R1303	4C	R5940	6A		
C1308	3C	C1514	2A	C5945	6A	R1308	3C	R5941	6A		
C1309	3B	C1605	3B	C5946	6A	R1320	3B	R5942	6A		
C1310	3C	C1801	3B	C5947	6A	R1340	4B	R5945	6A		
C1311	4B	C1802	3A	C5949	6A	R1341	4B	R5959	6A		
C1312	4B	C1803	3A	C5950	6A	R1343	4B	R5960	5A		
C1313	4B	C1807	3B	C5951	6A	R1344	5B	R5967	6B		
C1314	4B	C1809	3B	C5953	6A	R1345	4B	R5970	6B		
C1316	3B	C1810	3A	C5958	6A	R1346	4B	R5974	6B		
C1317	3B	C1812	3A	C5959	6A	R1347	4B	R5975	6B		
C1319	3B	C1813	3A	C5960	6B	R1353	5C	R5982	6B		
C1322	3B	C1815	3A	C5961	6B	R1500	3A	R5983	6B		
C1325	3C	C1816	3A	C5962	7B	R1505	2A	R5984	6B		
C1326	3B	C1818	3B	D1300	3B	R1508	3A	R5994	6A		
C1327	3B	C1823	3A	D1800	3A	R1524	2A	V1302	4C		
C1329	3B	C1825	3A	D5930	6A	R1525	2A	V1305	5C		
C1330	3C	C1826	3A	D5932	6A	R1530	2B	V1376	4B		
C1332	3B	C1930	3A	D5933	6A	R1531	2B	V1400	7A		
C1333	3B	C1931	2A	L1300	4B	R1532	2B	V2405	9A		
C1334	3B	C2720	7C	L1301	4C	R1805	3B	X1300	3C		
C1338	3C	C2721	7C	L1302	4B	R1806	3B	X1400	7A		
C1340	3B	C3501	7B	L1303	4B	R1807	3B	X1504	2B		
C1345	3C	C3502	7B	L1320	4B	R1808	3B	X1604	3A		
C1347	3B	C3513	7B	L1503	2A	R1813	3A	X1800	3B		
C1348	3B	C3514	7B	L1504	2A	R1814	3A	X3500	8A		
C1354	4C	C3515	7B	L1505	2B	R1815	3A	X4081	8A		
C1355	5B	C4081	8A	L1509	2A	R1817	3B	X4899	6B		
C1357	5B	C4082	8A	L1510	2A	R1930	2A	X5900	7B		
C1359	4C	C4083	8A	L1511	3B	R2417	7B	Z1501	2B		
C1363	5B	C4084	8A	L1591	2A	R2711	7C	Z4801	5B		
C1364	4B	C4085	8A	L1701	7B	R2712	7C	Z5930	6B		
C1367	4B	C4800	5B	L1702	7B	R3500	8A				
C1371	3B	C4801	5B	L1800	3B	R3501	7B				
C1372	3C	C4806	5B	L1803	3A	R3502	7B				
C1373	3B	C4807	5B	L4081	8A	R4090	8A				
C1374	3B	C4810	5B	L4083	9A	R4091	7A				
C1381	3B	C5148	2C	L4085	8A	R4806	5B				
C1382	3B	C5150	2B	L4089	8A	R4807	5B				
C1391	3B	C5932	7B	L5931	7B	R4808	5B				
C1400	7A	C5933	7B	N3500	7B	R4809	5B				
C1402	7A	C5934	6A	N4800	5B	R5930	7A				

Achtung : Hoehenprofil C24___-___-___-___-42 (gilt nur fuer Entwicklung)
Liefervarianten siehe : V24851-Z2000-A1-*-35

VERS.	CHANGE NUMBER	DATE	NAME
1	40140	07.07.2006	bar

DATE	07.07.2006
NAME	Bartenschl.
APPR'D	
STD	
PH RD IND LPM	

Obsidian B2 Board
-Q3340-E2 V1, 900, w FM
WIRING DIAGRAMM (SOLDER SIDE 2)

BENQ mobile

286764

(Created by BOM number: A5B00920100641-40140)

3:1

SHEET 2+

ALS BETRIEBSGEHEIMNIS ANVERTRAUT
ALLE RECHTE VORBEHALTEN

PROPRIETARY DATA, COMPANY CONFIDENTIAL
ALL RIGHTS RESERVED

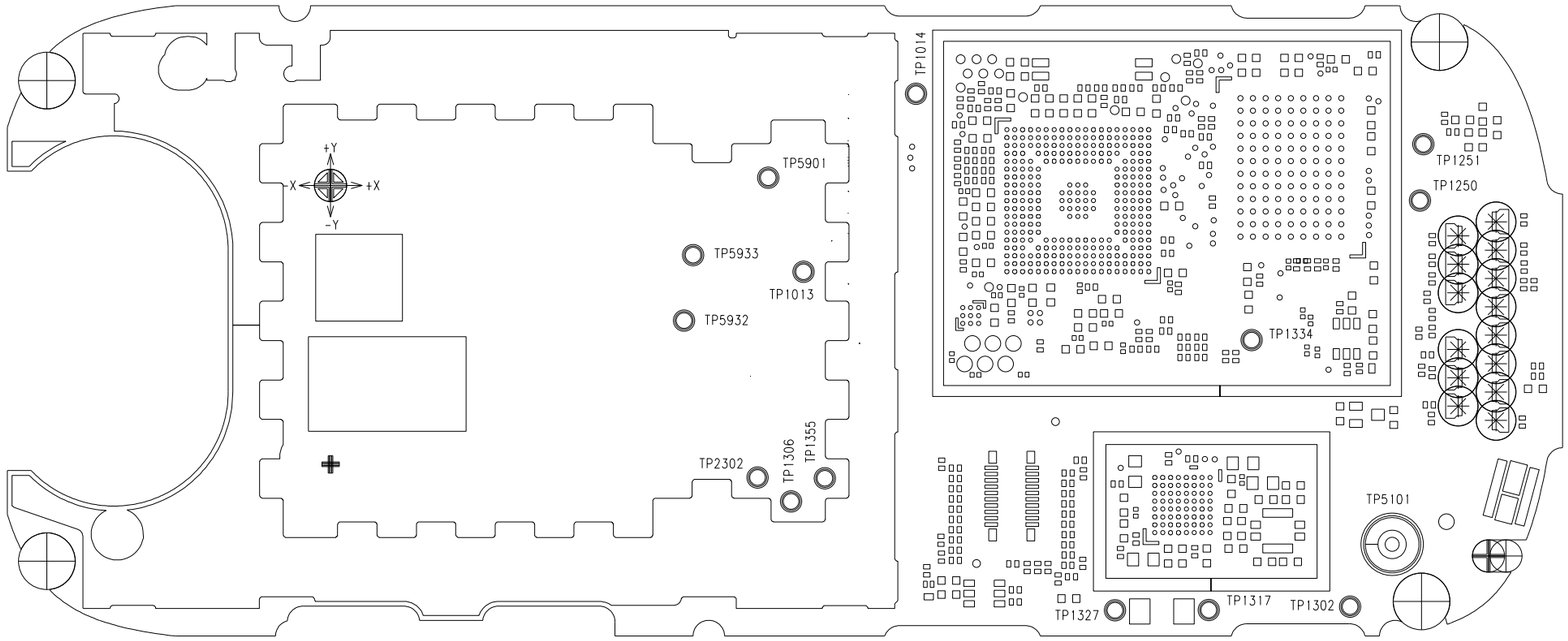

TP1013	6B /TVCXO
TP1014	6A /BREF
TP1250	9A /F_VPP
TP1251	9A 1.8V_MEM2
TP1302	8C /PM_WADOG2
TP1306	5B 2.9V
TP1317	8C /N$532316
TP1327	7C VBUCK
TP1334	8B /PM_RESET_N
TP1355	6B VBOOST
TP2302	5B /LCD_BCKLT
TP5101	8B /N$457504
TP5901	5A /BB_SIN26M
TP5932	5B /N$546035
TP5933	5B /TXBAND

ALS BETRIEBSGEHEIMNIS ANVERTRAUT
ALLE RECHTE VORBEHALTEN

VERS.	CHANGE NUMBER	DATE	NAME
1	40140	07.07.2006	bar

DATE 07.07.2006
NAME Bartenschl.
APPR'D
STD
PH RD IND LPM

Obsidian B2 Board
-Q3340-E2 V1, 900, w FM
TESTPOINT DIAGRAMM (SIDE 1)

3:1

BENQ mobile

286765

SHEET 1+

(Created by BOM number: A5B00920100641-40140)

PROPRIETARY DATA, COMPANY CONFIDENTIAL
ALL RIGHTS RESERVED

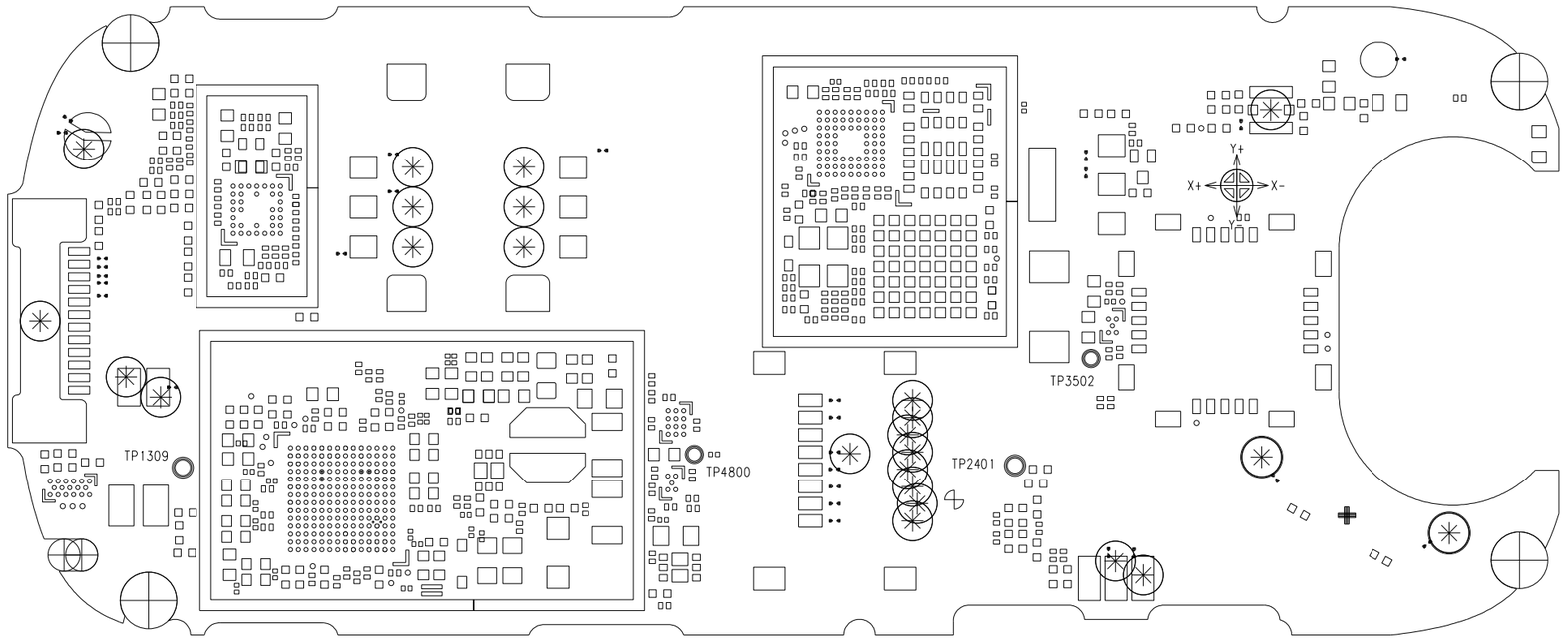

TP1309	3B	2.65V	
TP2401	7B	/N$554056	
TP3502	7B	DVDD_CAMERA	
TP4800	5B	MMC_VCC	

VERS.	CHANGE NUMBER	DATE	NAME
1	40140	07.07.2006	bar

DATE 07.07.2006
NAME Bartenschl.
APPR'D
STD
PH RD IND LPM

Obsidian B2 Board
-Q3340-E2 V1, 900, w FM
TESTPOINT DIAGRAMM (SIDE 2)

3:1

BENQ mobile

286765

SHEET 2-

(Created by BOM number: A5B00920100641-40140)

ALS BETRIEBSGEHEIMNIS ANVERTRAUT
ALLE RECHTE VORBEHALTEN

Proprietary data, company confidential.
All rights reserved

Als Betriebsgeheimnis anvertraut
Alle Rechte vorbehalten

1	2	3	4	5

HIERARCHY	SHEET	PDF-SHEET
A5B00900217367-38288	index	sheet 1
	netlist1	sheet 2
	poslist1	sheet 3
	page1	----
	sheet1	sheet 4

A

B

C

D

E

				DATE	15.12.2005	MMI Obsidian Variant V1 4-layer TOP HIERARCHY LEVEL SCHEMATIC	1:1
				USER	Bak		
				APPR'D			
				MP PD HW4 AAL			
				BENQ mobile		273854	index
1	38290	19.04.2006	olh				
VERS.	CHANGE NUMBER	DATE	NAME	(Created by BOM number: A5B00900217369-38290)			

Proprietary data, company confidential.
All rights reserved

Als Betriebsgeheimnis anvertraut
Alle Rechte vorbehalten

1	2	3	4	5	

KB_ON_OFF
/sheet1 9 D
/sheet1 3 E

KP_IN0
/sheet1 9 D
/sheet1 1 B

KP_IN1
/sheet1 9 D
/sheet1 1 B

KP_IN2
/sheet1 9 D
/sheet1 1 C

KP_IN3
/sheet1 9 D
/sheet1 1 C

KP_IN4
/sheet1 9 D
/sheet1 1 D

KP_IN5_OUT6
/sheet1 9 D
/sheet1 4 D

KP_OUT0
/sheet1 9 D
/sheet1 1 D

KP_OUT1
/sheet1 9 D
/sheet1 2 D

KP_OUT2
/sheet1 9 D
/sheet1 3 D

KP_OUT3
/sheet1 9 D
/sheet1 4 D

LIGHT_KP
/sheet1 9 D
/sheet1 9 C

VCC_LIGHT
/sheet1 9 A
/sheet1 9 E

				DATE	15.12.2005	MMI Obsidian Variant V1 4-layer TOP HIERARCHY LEVEL SCHEMATIC	1:1
				USER	Bak		
				APPR'D			
				MP PD HW4 AAL			
				BENQ mobile		273854	netlist1
1	38290	19.04.2006	olh				
VERS.	CHANGE NUMBER	DATE	NAME	(Created by BOM number: A5B00900217369-38290)			

Proprietary data, company confidential.
All rights reserved

Als Betriebsgeheimnis anvertraut
Alle Rechte vorbehalten

1	2	3	4	5

R1 /sheet1 8 C
R2 /sheet1 9 C
TP19 /sheet1 9 C
TP18 /sheet1 9 B
TP17 /sheet1 9 B
TP13 /sheet1 8 B
TP12 /sheet1 8 A
TP15 /sheet1 8 C
TP16 /sheet1 9 A
TP14 /sheet1 8 B
V11 /sheet1 8 A
V12 /sheet1 8 A
V13 /sheet1 8 B
V14 /sheet1 8 C
V15 /sheet1 9 A
V16 /sheet1 9 A
V17 /sheet1 9 B
V18 /sheet1 9 C

A

B

C

D

E

				DATE	15.12.2005	MMI Obsidian Variant V1 4-layer TOP HIERARCHY LEVEL SCHEMATIC	1:1
				USER	Bak		
				APPR'D			
				MP PD HW4 AAL			
				BENQ mobile		273854	poslist1
1	38290	19.04.2006	olh				
VERS.	CHANGE NUMBER	DATE	NAME	(Created by BOM number: A5B00900217369-38290)			

Proprietary data, company confidential.
All rights reserved

Als Betriebsgeheimnis anvertraut
Alle Rechte vorbehalten

KEYPAD_SGOLD2

2900-2949

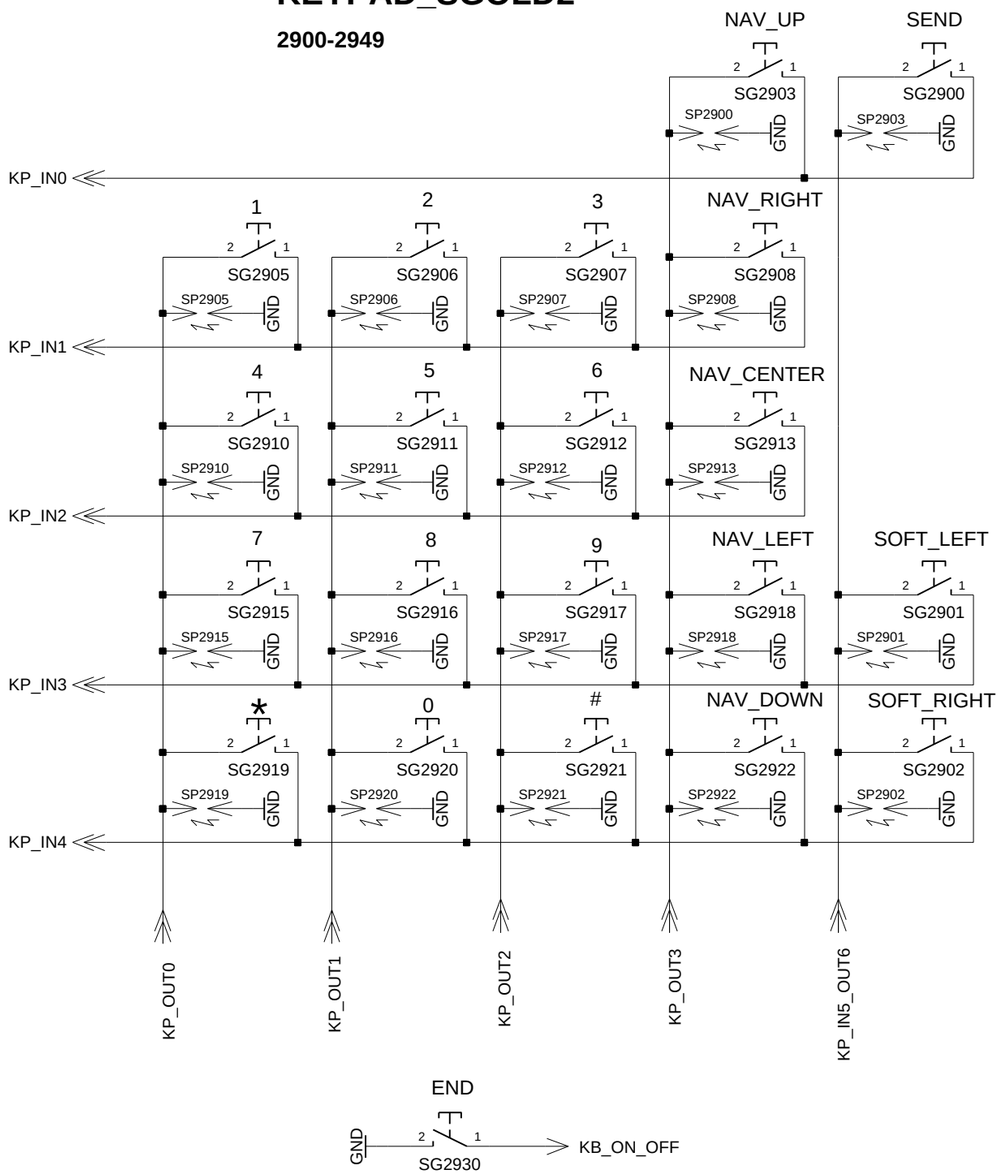

	OBSIDIAN	
0	X	
1	X	
2	X	
3	X	
4	X	
5	X	
6	X	
7	X	
8	X	
9	X	
*	X	
#	X	
SEND	X	
END	X	
SOFT LEFT	X	
SOFT RIGHT	X	
OPERATOR		
TASK		
CUSTOMER		
NAVI UP	X	
NAVI LEFT	X	
NAVI RIGHT	X	
NAVI CENTER	X	
NAVI DOWN	X	
SIDE1/ SIDE2	X	
SIDE3/ SIDE4	X	

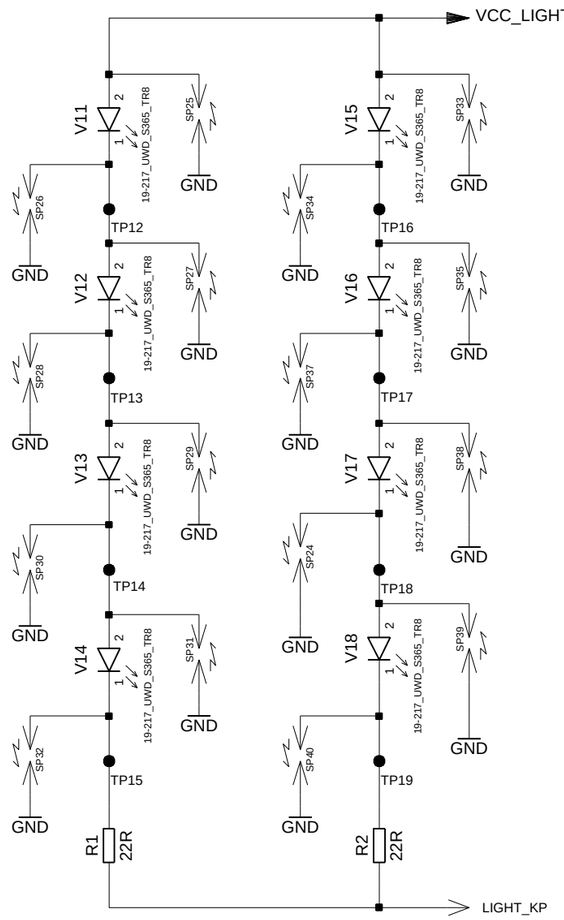

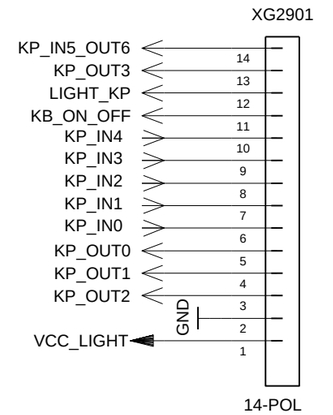

				DATE	15.12.2005
				USER	Bak
				APPR'D	
				MP PD HW4 AAL	
				BENQ mobile	
1	38290	19.04.2006	olh		
VERS.	CHANGE NUMBER	DATE	NAME		

MMI Obsidian
Variant V1 4-layer
TOP HIERARCHY LEVEL
SCHEMATIC

1:1

273854

sheet1

(Created by BOM number: A5B00900217369-38290)

PROPRIETARY DATA, COMPANY CONFIDENTIAL
ALL RIGHTS RESERVED

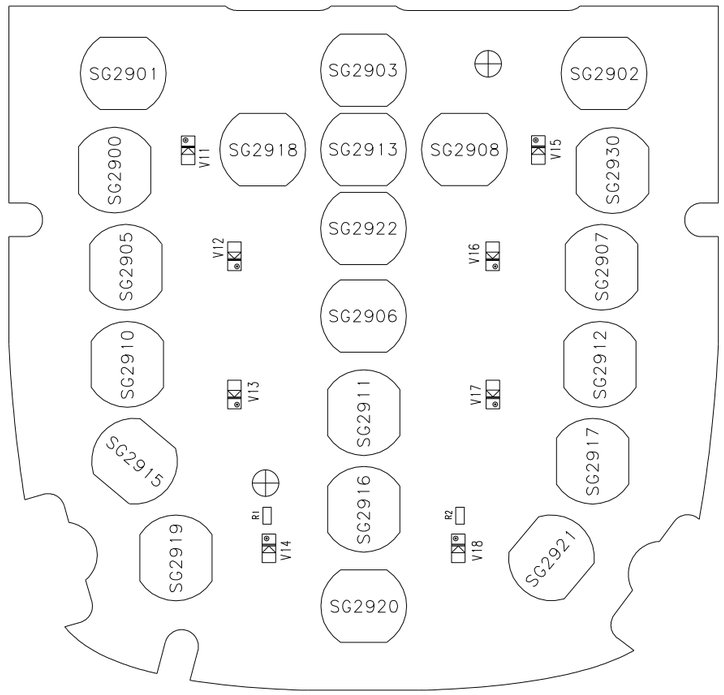

R1	5C
R2	6C
V11	5B
V12	5B
V13	5C
V14	5C
V15	7B
V16	6B
V17	6C
V18	6C

Achtung : Hoehenprofil C24___-___-___-__-42 (gilt nur fuer Entwicklung)
Liefervarianten siehe : V24851-Z2000-A1-*-35

VERS.	CHANGE NUMBER	DATE	NAME		
1	38290	19.04.2006	olh		
				DATE	15.12.2005
				NAME	Bak
				APPR'D	
				STD	
				MP PD HW4 AAL	

MMI Obsidian
Variant V1 4-layer
WIRING DIAGRAMM (SOLDER SIDE 1)

3:1

BENQ mobile

273855

SHEET 1+

(Created by BOM number: A5B00900217369-38290)

ALS BETRIEBSGEHEIMNIS ANVERTRAUT
ALLE RECHTE VORBEHALTEN

PROPRIETARY DATA, COMPANY CONFIDENTIAL
ALL RIGHTS RESERVED

ALS BETRIEBSGEHEIMNIS ANVERTRAUT
ALLE RECHTE VORBEHALTEN

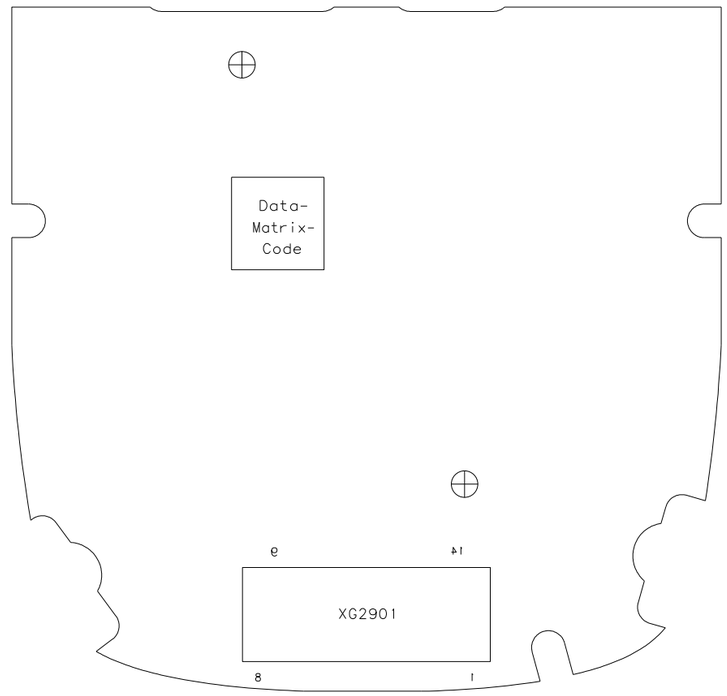

Achtung : Hoehenprofil C24___-___-___-__-42 (gilt nur fuer Entwicklung)
Liefervarianten siehe : V24851-Z2000-A1-*-35

				DATE	15.12.2005	MMI Obsidian Variant V1 4-layer WIRING DIAGRAMM (SOLDER SIDE 2)	3:1
				NAME	Bak		
				APPR'D			
				STD			
				MP PD HW4 AAL			
				BENQ mobile		273855	SHEET 2+
1	38290	19.04.2006	olh				
VERS.	CHANGE NUMBER	DATE	NAME	(Created by BOM number: A5B00900217369-38290)			

PROPRIETARY DATA, COMPANY CONFIDENTIAL
ALL RIGHTS RESERVED

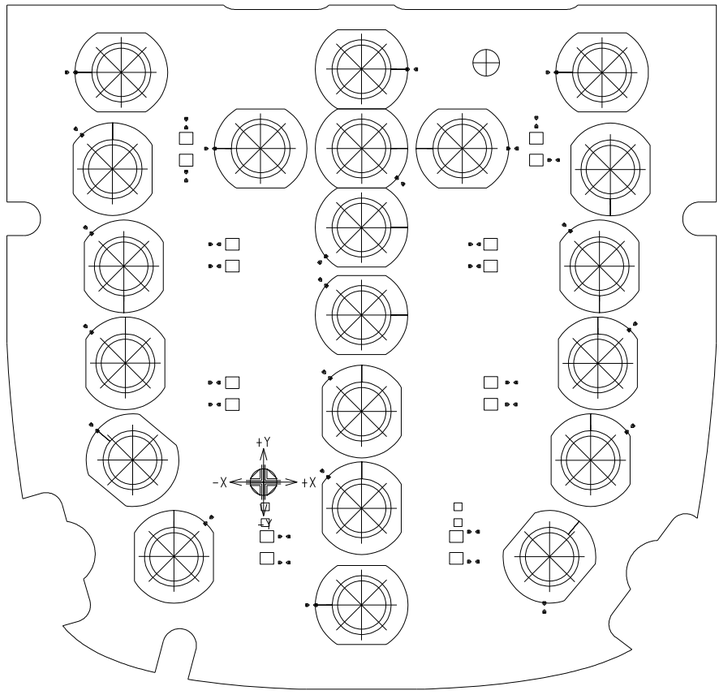

ALS BETRIEBSGEHEIMNIS ANVERTRAUT
ALLE RECHTE VORBEHALTEN

				DATE	15.12.2005	MMI Obsidian Variant V1 4-layer TESTPOINT DIAGRAMM (SIDE 1)	3:1
				NAME	Bak		
				APPR'D			
				STD			
				MP PD HW4 AAL			
				BENQ mobile		273856	SHEET 1+
1	38290	19.04.2006	olh				
VERS.	CHANGE NUMBER	DATE	NAME	(Created by BOM number: A5B00900217369-38290)			

PROPRIETARY DATA, COMPANY CONFIDENTIAL
ALL RIGHTS RESERVED

ALS BETRIEBSGEHEIMNIS ANVERTRAUT
ALLE RECHTE VORBEHALTEN

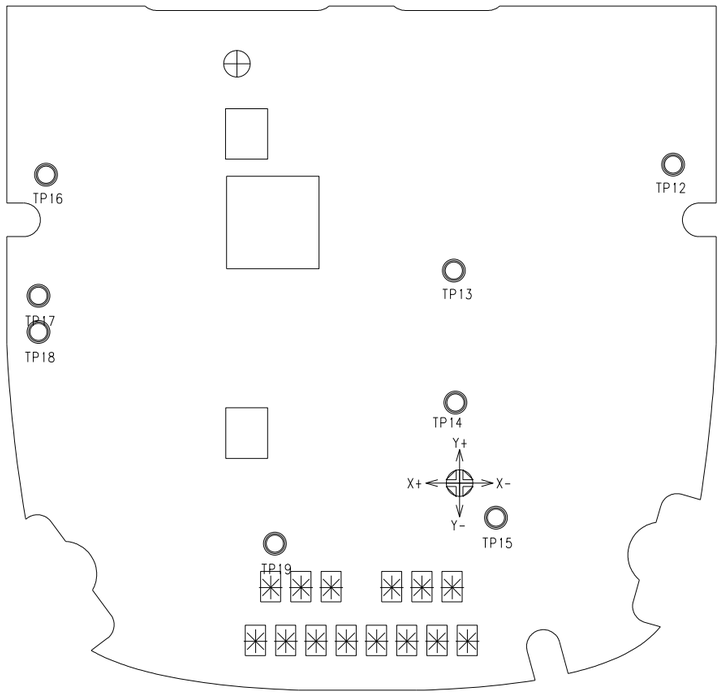

TP12	6B	/N$11119
TP13	5B	/N$11120
TP14	5C	/N$11122
TP15	5C	/N$12159
TP16	3B	/N$11123
TP17	3B	/N$12370
TP18	3B	/N$12369
TP19	4C	/N$12368

				DATE	15.12.2005	MMI Obsidian Variant V1 4-layer TESTPOINT DIAGRAMM (SIDE 2)	3:1
				NAME	Bak		
				APPR'D			
				STD			
				MP PD HW4 AAL			
						BENQ mobile	273856
1	38290	19.04.2006	olh				SHEET 2-
VERS.	CHANGE NUMBER	DATE	NAME	(Created by BOM number: A5B00900217369-38290)			