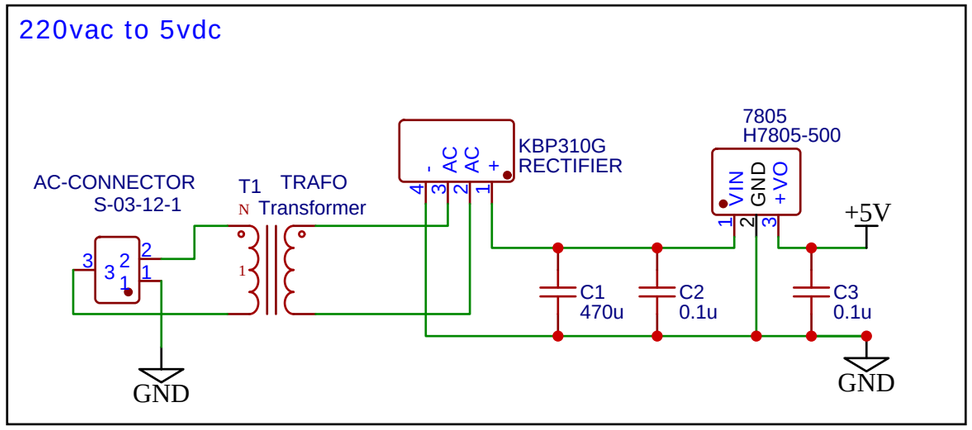

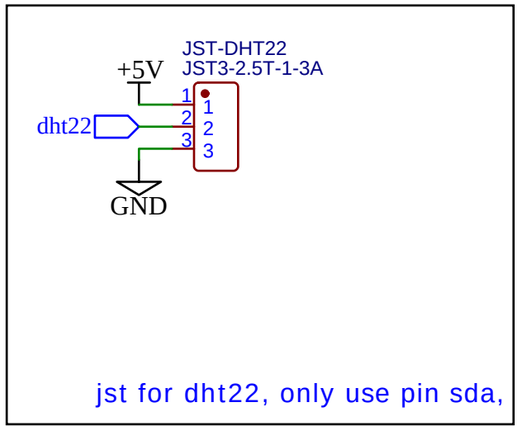

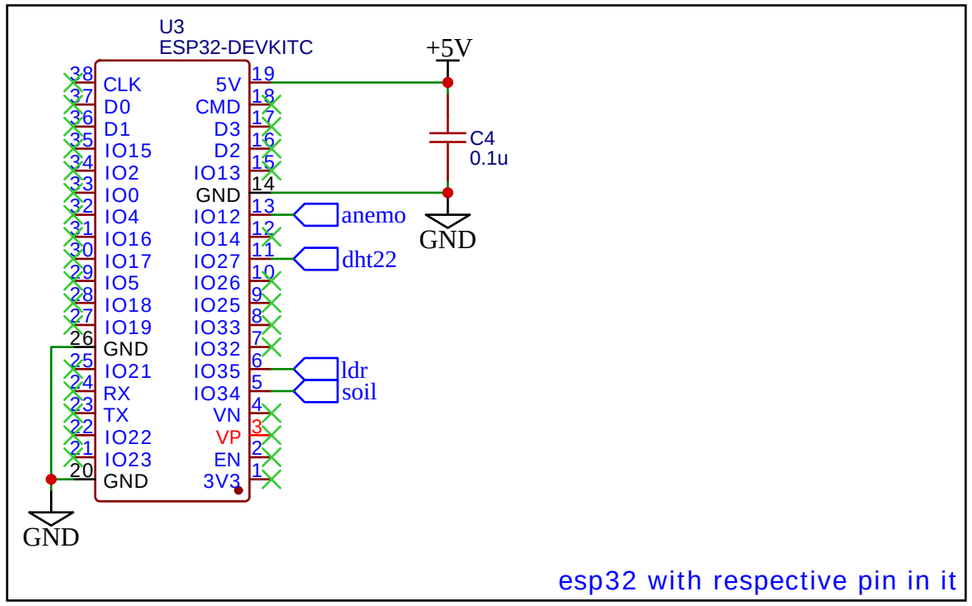

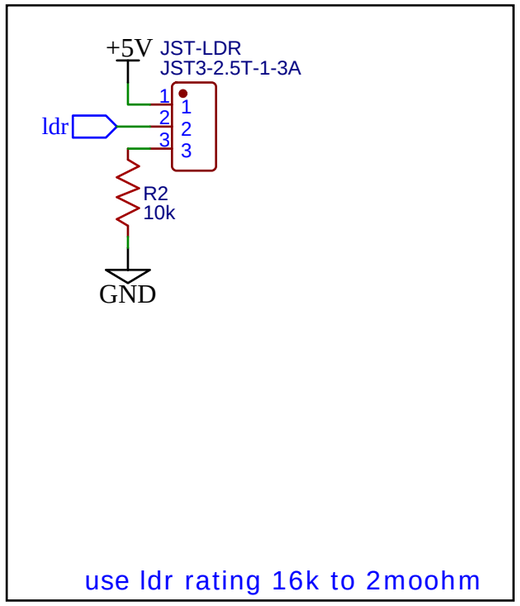

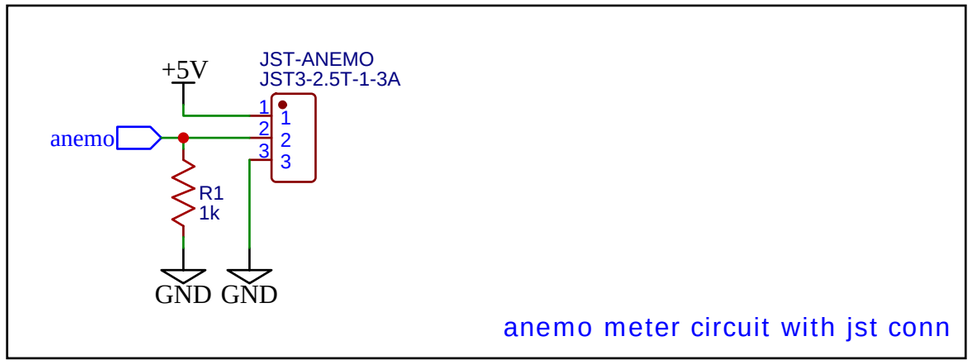

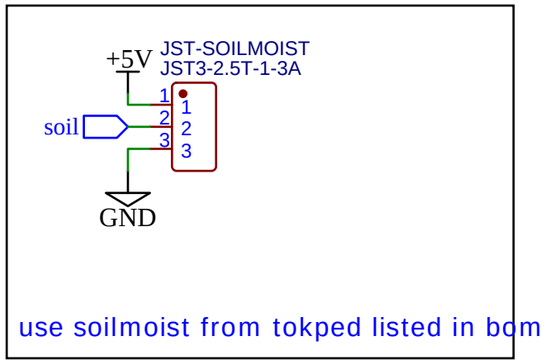

TITLE: UJIAN PT QTASMIN, ALAF RAMADHN	REV: 1.0
EasyEDA — Company: QTASMIN	Sheet: 1/1
Date: 2024-04-26 — Drawn By: ALAF RAMADHAN	