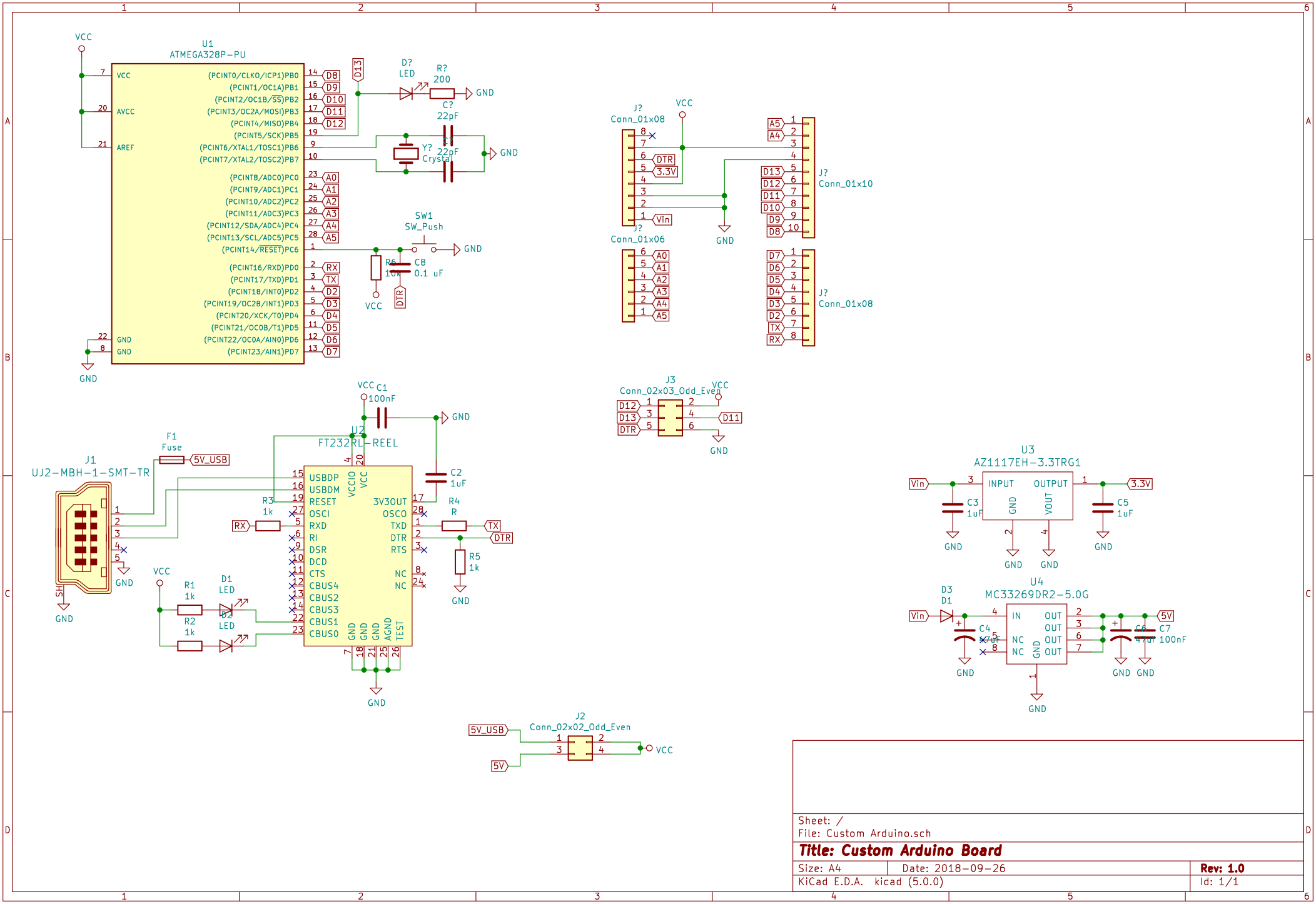

Sheet: /
File: Custom Arduino.sch

Title: Custom Arduino Board

Size: A4	Date: 2018-09-26	**Rev: 1.0**
KiCad E.D.A. kicad (5.0.0)		Id: 1/1