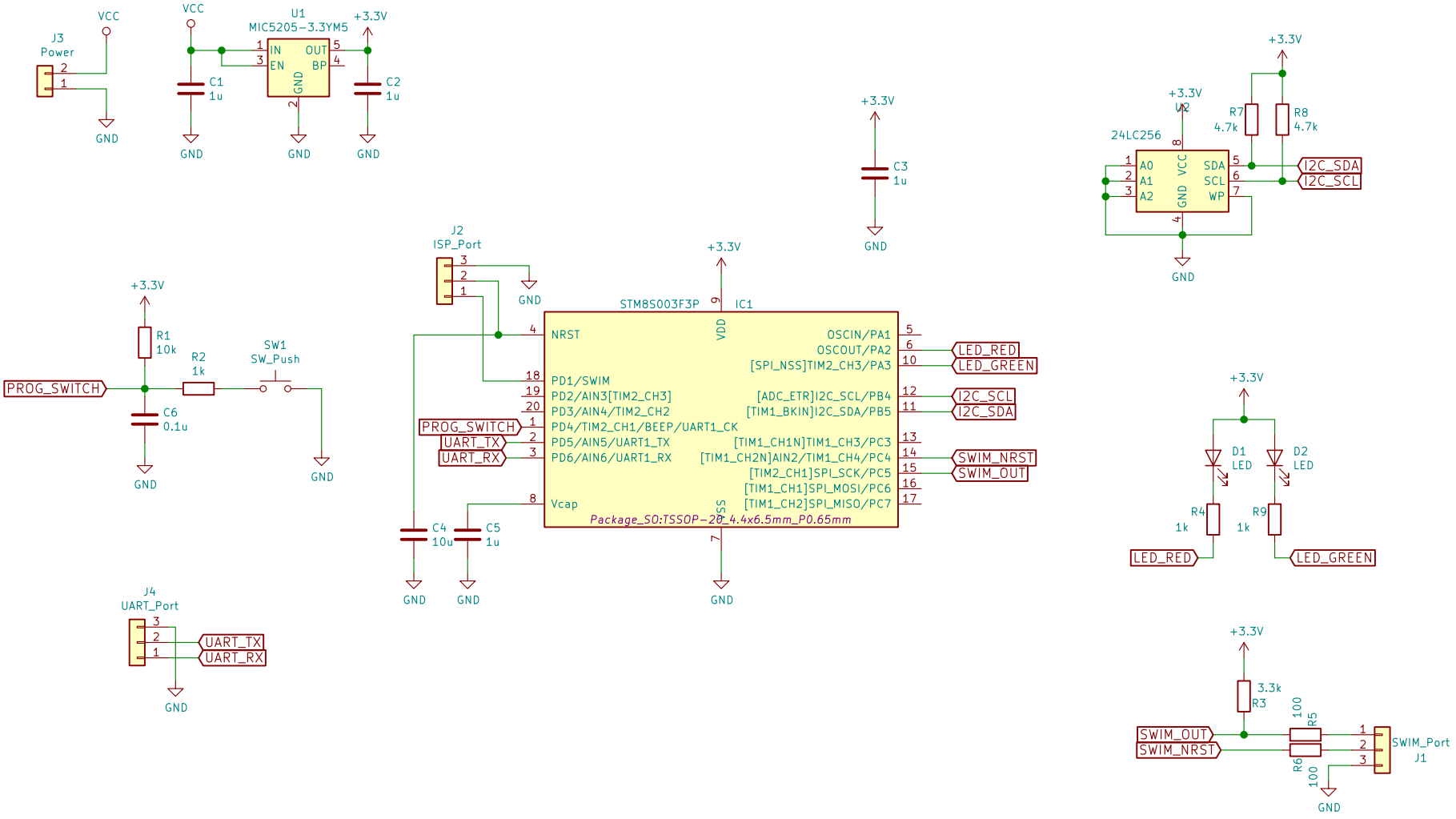

Sheet: /
File: STM8_Flasher.sch

Title:

Size: A4	Date:	Rev:
KiCad E.D.A. kicad 5.1.0-rc1-unknown-235f2c776ubuntu16.04.1		Id: 1/1