RepRap Motherboard

make.rrrf.org/rmb-1.2

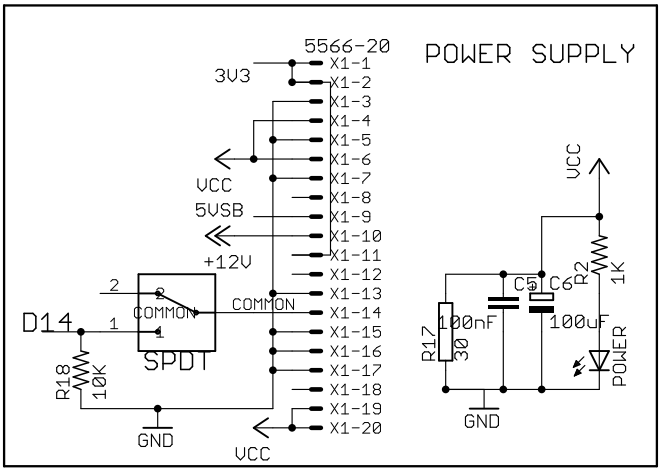

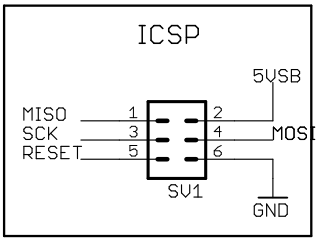

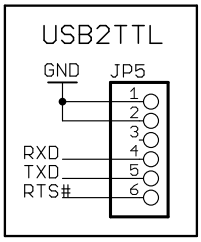

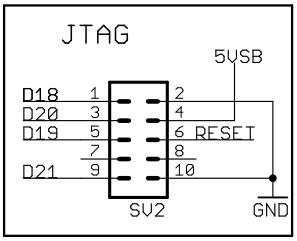

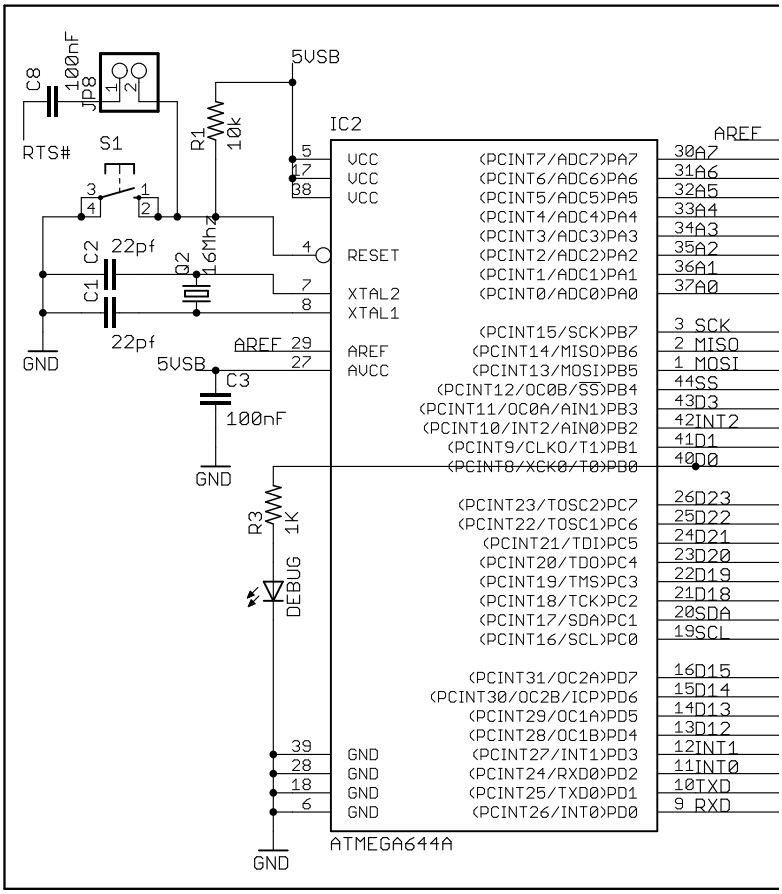

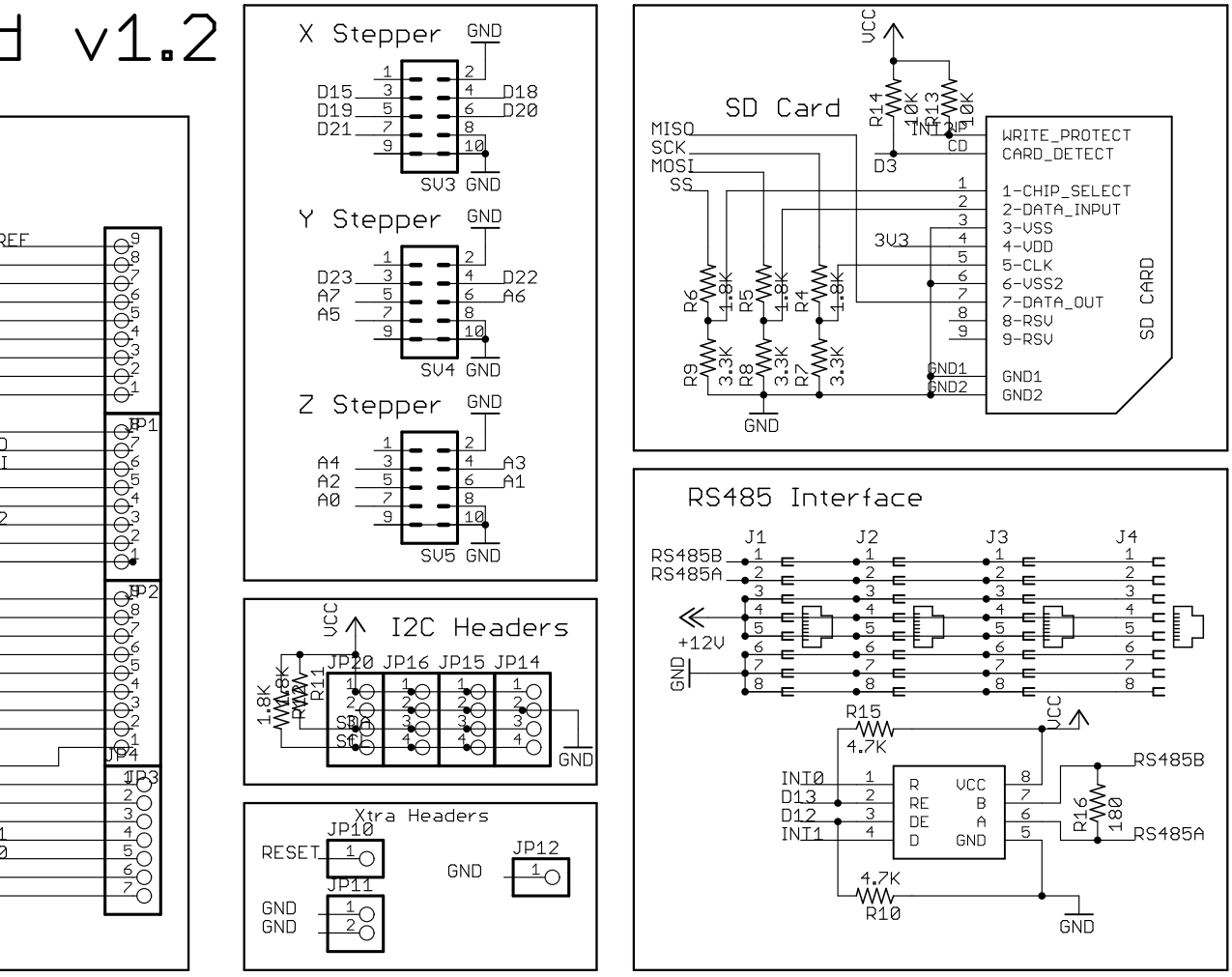
v1.2
X Stepper
GND
D15
D19
D21
D18
D20
SV3 GND
Y Stepper
D23
A7
A5
D22
A6
SV4 GND
Z Stepper
A4
A2
A0
A3
A1
SV5 GND
JP1
JP2
JP3
JP4
I2C Headers
VCC
JP20 JP16 JP15 JP14
1.8K
R11
SDA
SCL
GND
Xtra Headers
JP10
RESET
JP11
GND
GND
JP12
GND
SD Card
VCC
R14
10K
R13
10K
INI2
D3
MISO
SCK
MOSI
SS
3V3
R6
1.8K
R5
1.8K
R4
1.8K
R9
3.3K
R8
3.3K
R7
3.3K
GND
WRITE_PROTECT
CARD_DETECT
1-CHIP_SELECT
2-DATA_INPUT
3-VSS
4-VDD
5-CLK
6-VSS2
7-DATA_OUT
8-RSV
9-RSV
GND1
GND2
SD CARD
RS485 Interface
J1
J2
J3
J4
RS485B
RS485A
+12V
GND
R15
4.7K
VCC
INI0
D13
D12
INI1
R
RE
DE
D
VCC
B
A
GND
RS485B
R16
180
RS485A
4.7K
R10
GND