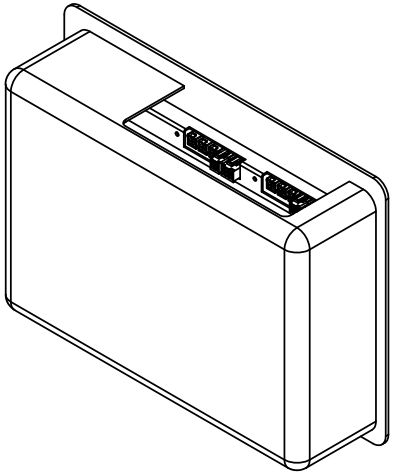

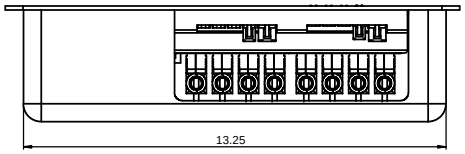

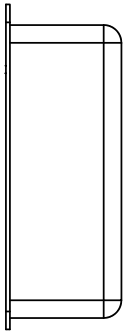

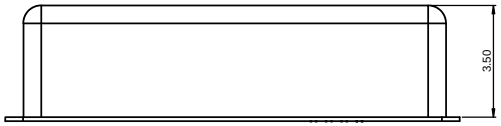

UNLESS OTHERWISE SPECIFIED: DIMENSIONS ARE IN MILLIMETERS SURFACE FINISH: TOLERANCES: LINEAR: ANGULAR:	FINISH:	DEBUR AND BREAK SHARP EDGES	DO NOT SCALE DRAWING	REVISION:	
	NAME	SIGNATURE	DATE	TITLE:	
DRAWN					
CHK'D					
APPR'D					
MFG					
Q'A				MATERIAL:	
				WEIGHT:	
FINISH:				SCALE: 1:2	SHEET 1 OF 1

Galil_box Jan 25 3 pm