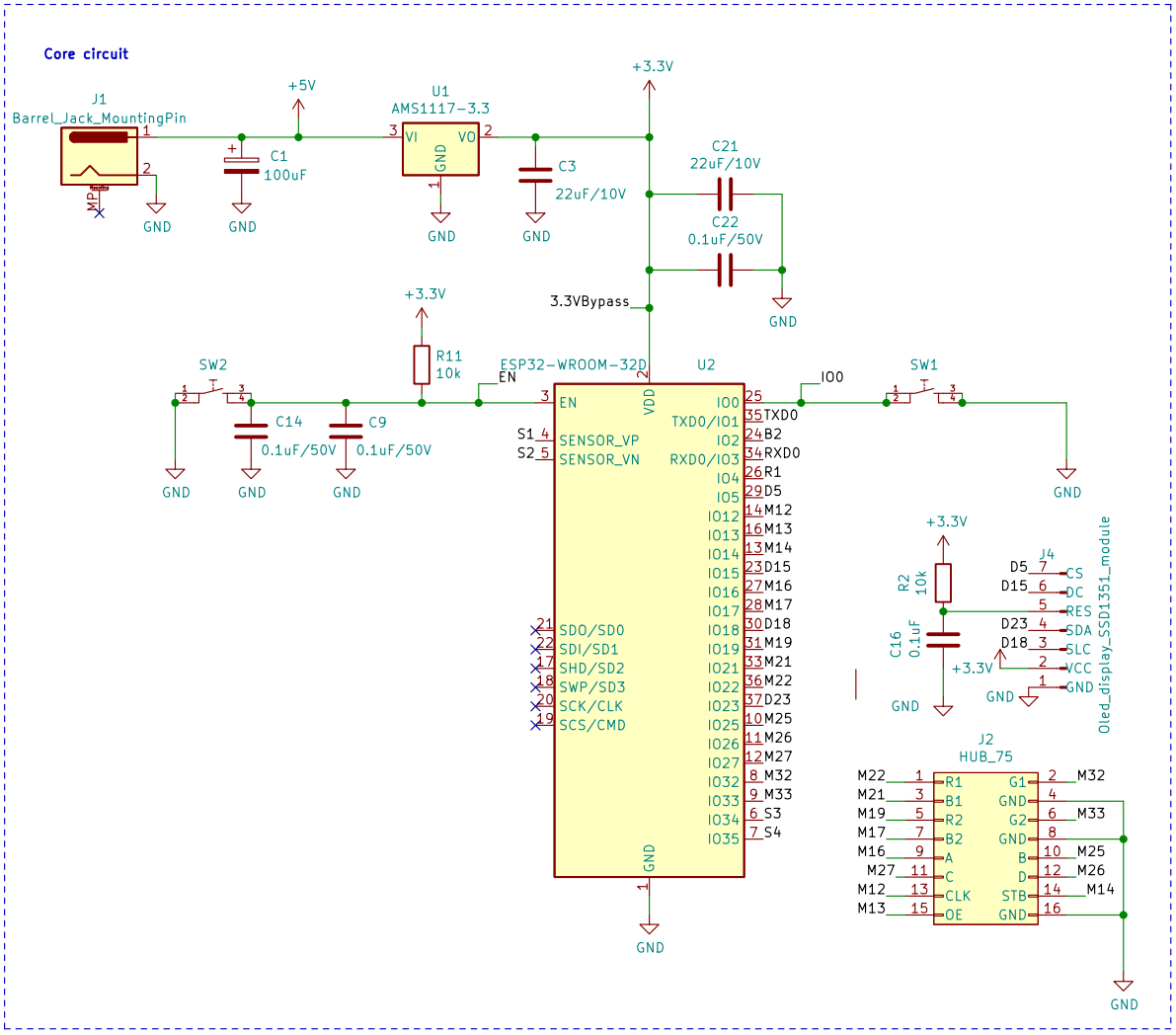

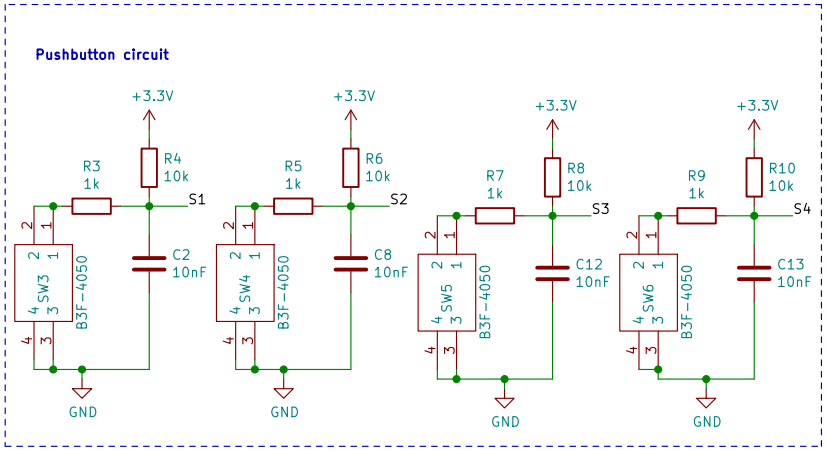

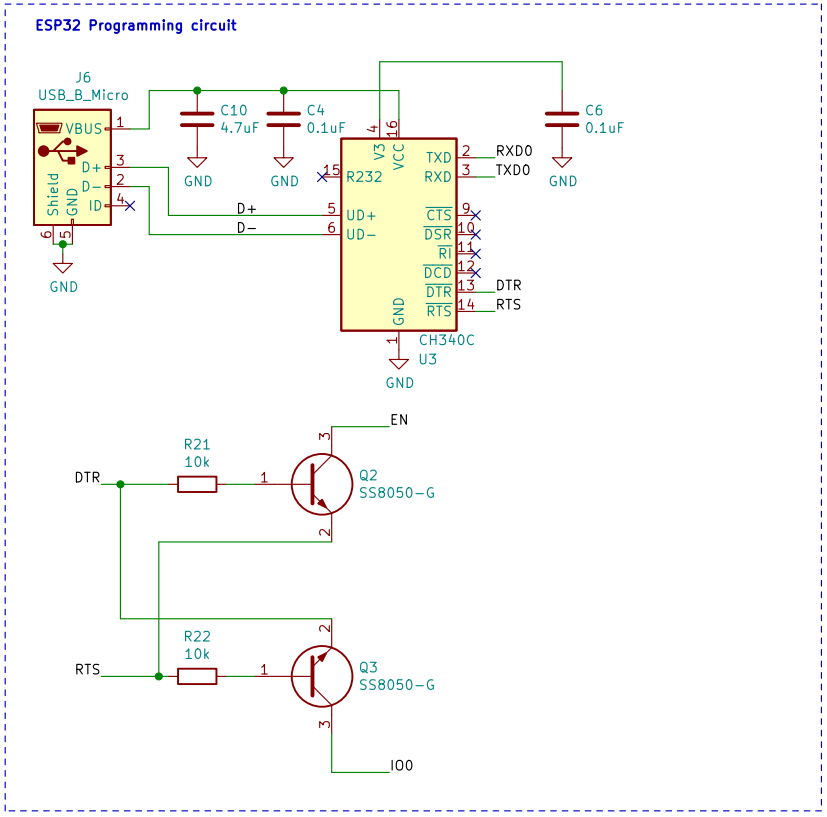

Title: LITOS		
Size: A4	Date: 2022-05-19	Rev: 4.1
KiCad E.D.A. kicad (6.0.2)		Id: 1/1