Government of Karnataka
DEPARTMENT OF TECHNICAL EDUCATION

Program	Non Mechanical & Allied Programs	**Semester**	I/II
Course Name	Computer Aided Engineering Graphics (CAEG)	**Type of Course**	Integrated
Course Code	25ME02I	**Contact Hours**	7 Hrs/Week= 91Hrs
Teaching Scheme	L: T:P 3:0:4	**Credits**	5
CIE Marks	50	**SEE Marks**	50

1. **Rationale:** Engineering Drawing is universal & effective language of engineers that strengthens the technological structure. It helps in communicating design ideas and technical information to engineers and other professionals throughout the design process. The objective of Engineering drawing & CAD is to introduce the students, the techniques of drawing, visualize and represent 3D objects in 2D & create solid model.

2. **Course Outcomes :**At the end of the Course, the student will be able to:

CO-01	Create sketches with proper dimensions using drawing instruments.
CO-02	Develop and Interpret Principal Views of Points, Lines, Planes and Solids.
CO-03	Draw Orthographic views for the given pictorial Drawing.
CO-04	Create Solid model for the given pictorial Drawing in CAD.

3. **Course Content**

Note: Practice shall be done in A4 drawing book.

WEEK	CO	PO	Lecture (3 Hours per week)	Practical (CAD) (4 Hours per week)
1	1	1,4,7	**Fundamentals of Engineering Drawing:** • Introduction to Engineering Drawing - Need for Engineering Drawing, Instruments Used in Engineering Drawing • Layout of Drawing sheet, Title Block, Types of Lines and its Applications. • **Dimensioning:** Introduction to dimensioning, Need for dimensioning & Eelements of dimensioning.	• **Practice Dimensioning of common features:** Line, Radius, Diameter, Arc, Chord, Angles, Sphere, Chamfer, Hole, through hole, Counter bore & Counter Sink.

			• **System of dimensioning:** Aligned system & Uni-direction system. • **Methods of Dimensioning** Chain, Parallel, Combined & Progressive Dimensioning	• Practice Problem on- Aligned and Uni-direction system of dimensioning. * • Practice Problems on - Chain Dimensioning, Parallel Dimensioning, Combined Dimensioning, Progressive Dimensioning
2	2	1,4,7	• **Projection of Points:** Problems on projection of points (All four quadrants). • **Projection of Lines** :(only First angle projection) for following conditions o Line parallel to both HP & VP o Line parallel to HP & Perpendicular to VP o Line parallel to VP & Perpendicular to HP.	• Practice Problems on projection of points (All four quadrants).* • Practice Problems on Projections of Lines
3	2	1,4,7	**Projection of Planes:** • Problems on projection of Planes (Triangular, Square, Pentagonal & Hexagonal laminas) With conditions: o Base edge resting on HP o Corner resting on HP o Inclination only to HP • Problems on projection Circular lamina with Inclination only to HP.	Practice Problems on Projection of Planes.*
4	2	1,4,7	**Projection of Solids:** • Problems on projections of Solids (Triangular and Square prism & pyramid) with conditions: o Base edge resting on HP o Corner resting on HP o Base Inclination only to HP. • Problems on projections of Cone with base Inclination only to HP	Practice Problems on Projection of Solids.*
5	2	1,4,7	• Problems on projections of Solids (Pentagonal, Hexagonal prism & pyramid) with conditions: o Base edge resting on HP o Corner resting on HP o Base Inclination only to HP. • Problems on projections of Cylinder with base Inclination only to HP	Practice Problems on Projection of Solids.*

6	3,4	1,4,7	**Orthographic Projections & Solid Modelling:** Draw Orthographic Views for Pictorial drawings.	• **Familiarization of CAD** window Commands like New file, saving the file, opening an existing drawing file, Undo, Redo, move commands, Menu bar, Tool bar, Task bar & Ribbon bar. • **Practice CAD commands** like arc, circle, square, rectangle, chamfer, Trim, Inclined lines, Extend, Extend to Next, Shell, Fillet, Group, Array and Mirror commands
7	3,4	1,4,7	Draw Orthographic Views for Pictorial drawings.	Create Solid model for Pictorial drawings in CAD & Extract Views.*
8	3,4	1,4,7	Draw Orthographic Views for Pictorial drawings.	Create Solid model for Pictorial drawings in CAD & Extract Views.*
9	3,4	1,4,7	Draw Orthographic Views for Pictorial drawings.	Create Solid model for Pictorial drawings in CAD & Extract Views.*
10	3,4	1,4,7	Draw Orthographic Views for Pictorial drawings	Create Solid model for Pictorial drawings in CAD & Extract Views.*
11	3,4	1,4,7	Draw Orthographic Views for Pictorial drawings.	Create Solid model for Pictorial drawings in CAD & Extract Views.*
12	3,4	1,4,7	Draw Orthographic Views for Pictorial drawings.	Create Solid model for Pictorial drawings in CAD & Extract Views.*
13	3,4	1,4,7	Draw Orthographic Views for Pictorial drawings.	Create Solid model for Pictorial drawings in CAD & Extract Views.*

Note: * Refer Annexure for suggestive practice questions and portfolio evaluation

4. References

Sl. No	Author	Title of Book	Publication/Year
01	Basant Agrawal/C N Agrawal	Engineering Drawing	3rd Edition, McGraw-Hill, 2019
02	K Venkata Reddy	Textbook of Engineering Drawing	2nd Edition, B S Publication
03	Venugopal K	Engineering Drawing and Graphics with Auto CAD	2009
04	N D Bhatt	Engineering Drawing	Charotar Publication

05	Imtiaz Hashmi	Fundamentals of Engineering Drawing	Lambert Academic Publishing,2010
06	M B Shah	Engineering Drawing	Pearson Education India, 2013
07	Frederick E Giesecke and Ivan L Hill	Technical Drawing with Engineering Graphics	Pearson Education Limited, 2013
08	K R Gopala Krishna	Engineering Graphics	Subhash Publications
09	R K Dhawan	Text book of Engineering Drawing	S Chand Publications
10	Maurice Arthur Parker	Engineering Drawing with Worked Examples, Volume 1	Stanley Thornes Publications

5. CIE Assessment Methodologies

Sl.No	CIE Assessment	Test Week	Duration (minutes)	Max Marks	
1.	CIE-1 Practice Test	4	90	50	**Average of all CIE=50 Marks**
2.	CIE-2 Practice Test	7	180	50	
3	CIE-3 Practice Test	10	90	50	
4.	CIE-4 Practice Test	13	180	50	
5	CIE-5 Portfolio evaluation of A4 - Drawing book and activities through Rubrics	1-13	-	50	
Total					**50 Marks**

6. SEE – Practice Assessment Methodologies

Sl. No	SEE – Practice Assessment	Duration (minutes)	Max Marks	Min Marks to pass
1.	Semester End Examination-Practice	180	50	20

7. CIE Theory Test model question paper

Program	CS/EC/EE/IT/MT			**Semester I/II**	
Course Name	Computer Aided Engineering Graphics (CAEG)			**Test**	I
Course Code	25ME02I	**Duration**	90min	**Marks**	50
Name of the Course Coordinator:					
Note: Answer any one full question from each section. Each full question carries equal marks.					
Q. No	**Questions**		**Cognitive Level**	**Course Outcome**	**Marks**
Section-1					

1	a) Dimension the given sketch using aligned system with chain method. 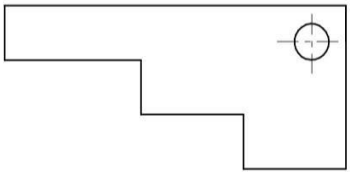 b) Draw three principal views of a point **P,** 30mm Above HP, 50mm infront of VP & 40mm from Left Profile Plane.	Apply	C01	10+15=25
2	a) Dimension the given sketch using unidirectional system with parallel method. 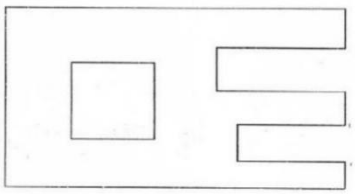 b) Draw three principal views of a point P, 30mm Below HP, 50mm behind VP & 40mm from Left Profile Plane.			
	Section-2			
3	a) Draw the three principal views of a line 40 mm long when it is placed parallel to both HP & VP. The line is 30 mm above HP,40 mm in front of VP and 30mm from right Profile plane. b) A triangular lamina of base edge 40mm rests with one its base edge on HP so that the surface of the lamina is inclined at 30° to HP. Draw the projections of the lamina.	Apply	CO2	10+15= 25
4	a) Draw the three principal views of a line 40mm long which it is inclined at 30°to VP and parallel to HP. The line is 30mm above HP, 40mm in front of VP and 30mm from right profile plane. b) A pentagonal lamina of base edge 40mm rests with one its base edge on HP so that the surface of the lamina is inclined at 30° to HP. Draw the projections of the lamina.			
Note for the Course coordinator: Each question may have one, two or three sub divisions. Optional questions in each section carry the same weightage of marks, cognitive level and course outcomes.				

Signature of the Course Coordinator **Signature of the HOD** **Signature of the IQAC Chairman**

8. CIE Practice Test model question paper

Program	CS/EC/EE/IT/MT			**Semester**	I/II
Course Name	Computer Aided Engineering Drawing.			**Test**	II/IV
Course Code	25ME02I	**Duration**	180 min	**Marks**	50
Name of the Course Coordinator:					

Questions	**CO**	**Marks**
a) A pentagonal Prism of base edge 40mm and height 60mm rests with one its corner on HP so that the base of the prism is inclined at 30° to HP. Draw the	CO2	20

projections of the prism. (ANSWER SHEET) b) Draw Orthographic views for a pictorial Drawing (ANSWER SHEET) & create solid model of the same pictorial drawing Extracting Views (CAD)	CO3, CO4	30
Scheme of assessment for Q1 1. Drawing projections of a Solid - 15 Marks 2. Adopting Dimensioning & Drawing convention (types of lines) -5Marks	**Scheme of assessment for Q2** 1. Drawing orthographic Views in answer sheet-15 Marks 2. Creating solid model in CAD -10Marks 3. Extracting Views- 5 Marks	
	Total Marks	**50**

Signature of the Course Coordinator **Signature of the HOD** **Signature of the IQAC Chairman**

9. Suggestive Activities for Tutorials:

- The students shall do minimum of one suggested activities
- List is an Example and not inclusive of all possible activities of the course.
- Student and Faculty are encouraged to choose activities that are relevant to the topic.

Sl. No.	Suggestive Activities for Tutorials
01	Prepare Nut and Bolt by 3D Printing
02	Prepare V block/ Patterns by 3D Printing
03	Prepare solid models of Inter-disciplinary components by 3D Printing

10. Rubrics for Assessment of A4 -Drawing sheet and Activities (Qualitative Assessment)

Sl. No.	Dimension	Unsatisfactory	Need Improvement	Satisfactory	Good	Excellent	Students Score
		(0-10)	(11-20)	(21-30)	(31-40)	(41-50)	
1	Technical Accuracy	Significant errors make the drawing unusable.	Multiple inaccuracies	Some errors affecting understanding but correctable.	Minor errors in interpretation or calculations	All details are accurate	40
2	Line Quality	Lines are messy and confusing.	Lines are uneven	Inconsistent line quality	Clear lines with minor inconsistencies.	Clean and consistent lines	40
3	Dimension	Dimensions are missing or incorrect.	Many errors; hard to interpret	Some dimension errors affecting interpretatio	Mostly accurate; minor issues	Dimensions are precise, clear, and correctly positioned, following	45

				n.		standards.	
4	Presentation & Neatness	Very untidy; Very poor presentation	Messy;Presentation hinders clarity	Somewhat neat;Some layout issues	Generally neat with minimal flaws; minor improvement in Presentation	Extremely neat and organized; all details easy to read	40
5	Adherence to Standards	Does not follow any drawing standards.	Limited adherence to standards	Lacks consistency.	Minor deviations from standards.	Aadheres to relevant drawing standards (ISO, ANSI, etc.).	35
	Average Marks = (40+40+45+40+35)/5 = 40 Marks						**40**

Note: Dimension and Descriptor shall be defined by the respective course coordinator as per the activities

11. SEE- Model Practice Question Paper

Program	CS/EC/EE/IT/MT		**Semester**	I
Course Name	Computer Aided Engineering Graphics (CAEG)	**Course Code:** 20ME02I	**Duration**	180 min
			Max Marks	50
Questions			**CO**	**Marks**
1. Draw Orthographic views for a pictorial Drawing (ANSWER SHEET) & create solid model of the same pictorial drawing (CAD)			3,4	50
Scheme of assessment for Q1 • Drawing orthographic Views in answer sheet -15 Marks • Creating solid model in CAD – 25 Marks • Extract Views – 5 Marks • Printout - 5 Marks				
			Total Marks	**50**

1) Signature of the Examiner **2) Signature of the Examiner**

12. Equipment/software list with Specification for a batch of 30 students

Sl. No.	Particulars	Specification	Quantity
01	Drawing tables	As per standard size	30
02	CAD software	-	30 users
03	Computers	Latest configuration	30

***Annexure**

Students shall practice these or similar questions for portfolio evaluation

1. Fundamentals of Engineering Drawing

Drawing Sheet No. 1 – (Student has to submit Minimum one standard size drawing sheets (A2) in this unit for portfolio evaluation).

- DrawFig.1&Fig.2as per the drawing and identify types of lines.

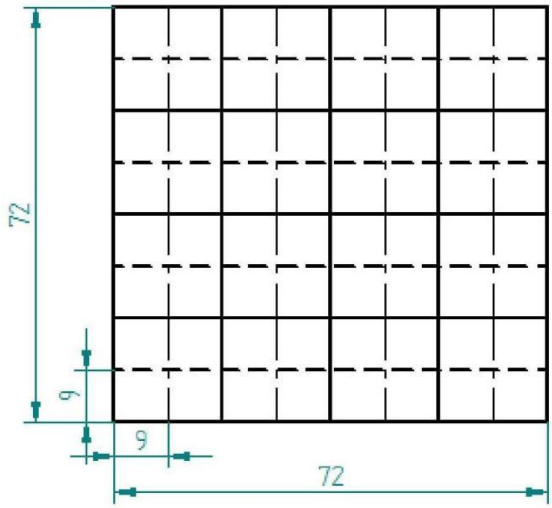

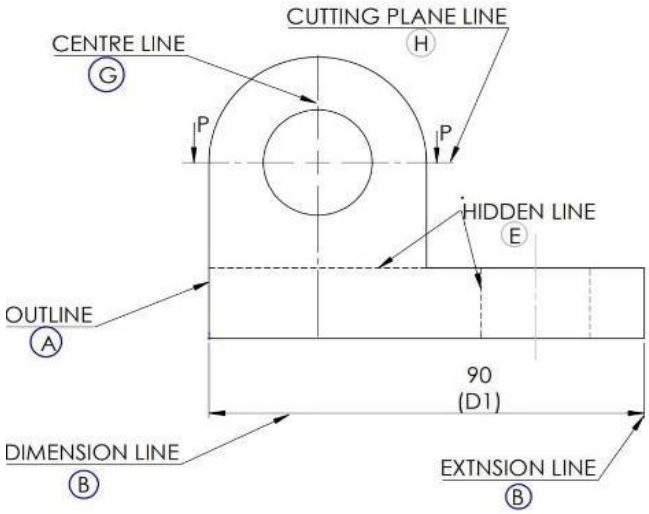

Fig.1 **Fig.2**

2. Dimensioning

Drawing Sheet No.2 & 3 - (Student has to submit Minimum two standard size drawing sheets (A2) in this unit for portfolio evaluation)

Draw Fig.3 to 1:1scale,1:2 scale & 2:1scale.

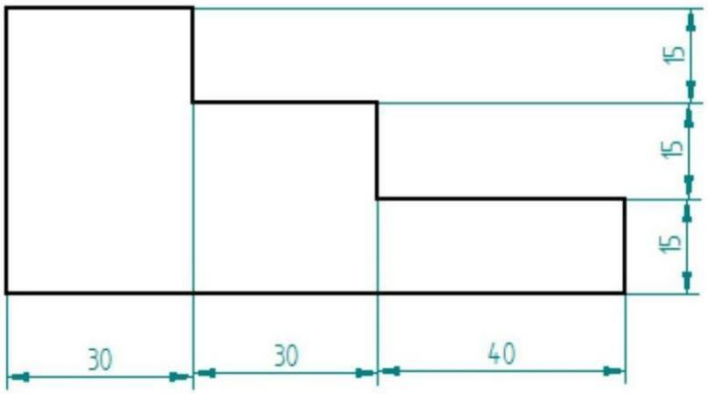

Fig.3

- Copy Fig. 3 to 1:1 scale and dimension it using both Aligned system & Uni-directional system.
- CopyFig.4to2:1ScaleanddimensionitusingAlignedsystemwithChaindimensioning.

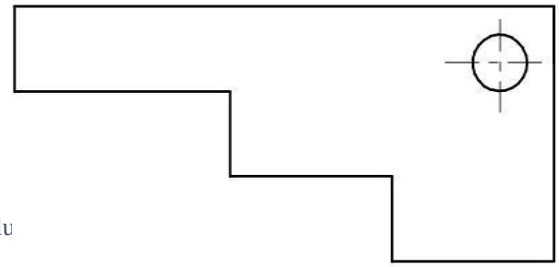

Fig.4

- Copy Fig. 5 to 1:1 Scale and dimension it using Unidirectional system with Parallel dimensioning

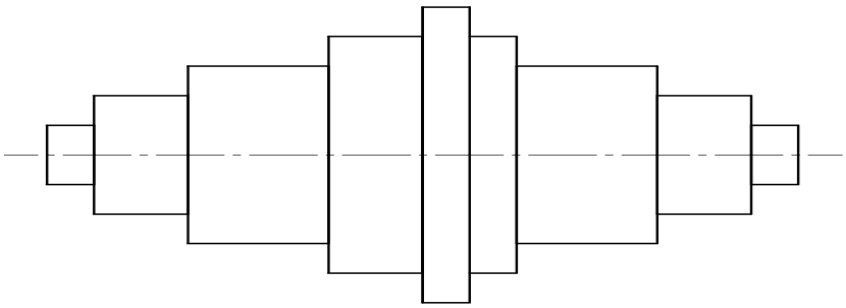

Fig.5

- Copy Fig. 6 to 1:1 scale and dimension it using unidirectional system with Combined dimensioning method

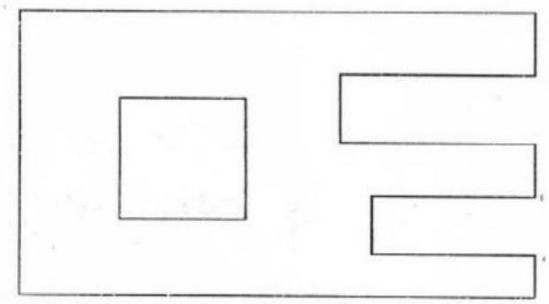

Fig.6

- Copy Fig. 7 to 1:1 scale and dimension it using Aligned system with Progressive dimensioning method

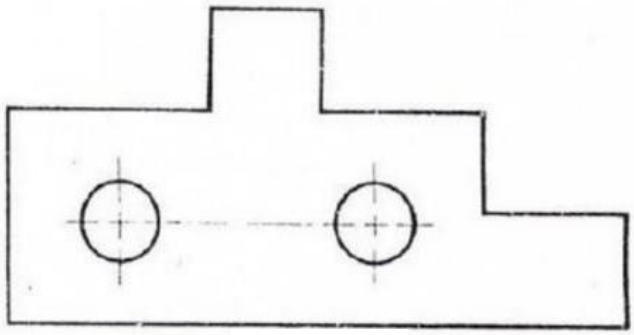

Fig.7

- Copy Fig. 8 to 1:1 scale and dimension it using Aligned system with chain dimensioning method

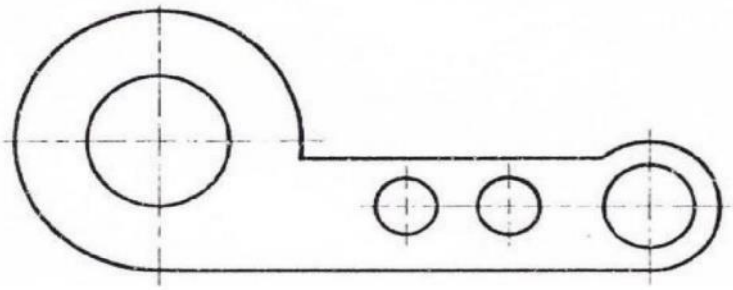

- **Fig.8**

2. Projection of Points

Drawing Sheet No.4- (Student has to submit Minimum one standard size drawing sheet (A2) in this unit for

portfolio evaluation).

Q1. Draw three principal views of a point P, 30mm Above HP, 50mm in front of VP&40mm from Left Profile Plane.

Q2. Draw three principal views of a point P, 30mm Above HP, 50mm behind VP & 40mm from Left Profile Plane.

Q3. Draw three principal views of a point P, 30mm Below HP, 50mm behind VP & 40mm from Left Profile Plane.

Q4. Draw three principal views of a point P, 30mm Below HP, 50mm in front VP & 40mm from Left Profile Plane.

2. Projection of Lines

Drawing Sheet No.5- (Student has to submit Minimum one standard size drawing sheet in this unit for portfolio evaluation).

Q1. Draw the three principal views of a line 40 mm long when it is placed parallel to both HP & VP. The line is 30 mm above HP, 40 mm in front of VP and 30mm from right Profile plane.

Q2. Draw the three principal views of a line 40 mm long when it is placed parallel to HP and perpendicular to VP. The line is 30mm above HP, 40mm in front of VP and 30mm from right Profile plane.

Q3. Draw the three principal views of a line 40 mm long when it is placed parallel to VP and perpendicular to HP. The line is 30mm above HP, 40mm in front of VP and 30mm from right Profile plane.

Q4. Draw the three principal views of a line 40mm long which it is inclined at 30° to HP and parallel to VP. The line is 30mm above HP,40mm in front of VP and 30mm from right profile plane.

Q5. Draw the three principal views of a line 40mm long which it is inclined at 30° to VP and parallel to HP. The line is 30mm above HP,40mm in front of VP and 30mm from right profile plane.

3. Projections of Planes

Drawing Sheet No.6 - (Student has to submit Minimum one standard size drawing sheet (A2) in this unit for portfolio evaluation).

Q1. A triangular lamina of base edge 40mm rests with one its base edge on HP so that the surface of the lamina is inclined at 30° to HP. Draw the projections of the lamina.

Q2. A triangular lamina of base edge 40mm rests with one its Corner on HP so that the surface of the lamina is inclined at 30° to HP. Draw the projections of the lamina.

Q3. A square lamina of base edge 40mm rests with one its base edge on HP so that the surface of the lamina is inclined at 30° to HP. Draw the projections of the lamina.

Q4. A square lamina of base edge 40mm rests with one its corner on HP so that the surface of the lamina is inclined at 30° to HP. Draw the projections of the lamina.

Q5. A pentagonal lamina of base edge 40mm rests with one its base edge on HP so that the surface of the lamina is inclined at 30° to HP. Draw the projections of the lamina.

Q6. A pentagonal lamina of base edge 40mm rests with one its corner on HP so that the surface of the lamina is inclined at 30° to HP. Draw the projections of the lamina.

Q7. A hexagonal lamina of base edge 40mm rests with one its base edge on HP so that the surface of the lamina is inclined at 30° to HP. Draw the projections of the lamina.

Q8. A hexagonal lamina of base edge 40mm rests with one its corner on HP so that the surface of the lamina is inclined at 30° to HP. Draw the projections of the lamina.

Q9. A circular lamina of 30mm diameter rests on HP such that the surface of the lamina is inclined at 30° to HP. Draw the projections of the lamina.

4. Projections of Solids

Drawing Sheet No.7- (Student has to submit Minimum one standard size drawing sheet (A2) in this unit for portfolio evaluation).

Q1. A triangular Prism of base edge40mm and height 60mm rests with one its base edge on HP so that the base of the prism is inclined at 30° to HP. Draw the projections of the prism.

Q2. A square Prism of base edge 40mm and height 60mm rests with one its base edge on HP so that the axis of the prism is inclined at 30° to HP. Draw the projections of the prism.

Q3. A pentagonal Prism of base edge 40mm and height 60mm rests with one its corner on HP so that the base of

the prism is inclined at 30° to HP. Draw the projections of the prism.

Q4. A hexagonal Prism of base edge 40mm and height 60mm rests with one its corner on HP so that the base of the prism is inclined at 30° to HP. Draw the projections of the prism.

Q5. Atriangularpyramidofbaseedge40mmandheight60mmisrestingwithoneofitscorneron HP so that axis of the pyramid is inclined at 30°to HP. Draw the projections of the pyramid.

Q6. AsquarepyramidofbaseedgeHP so that base of the pyramid is inclined at 30°to HP. Draw the projections of the pyramid.

Q7. A pentagonal pyramid of base edge 40mm and height 60mm is resting with one of its base edge on HP so that base of the pyramid is inclined at30°toHP.Drawtheprojectionsof the pyramid.

Q8. Ahexagonalpyramidofbaseedge40mmandheight60mmisrestingwithoneofitsbaseedge on HP so that base of the pyramid is inclined at30°toHP.Drawtheprojectionsof the pyramid.

Q9. A cylinder of 40mm diameter and axis height 65mm rests with its base on HP so that the base diameter inclined at 45° to the HP Draw the projections.

Q10. A cone of 40mm diameter and axis height 65mm is resting with its base on HP. Draw the projections if base diameter is inclined at 45° to HP.

5. Pictorial Drawings.

Drawing Sheet No.8,9& 10 - (Student has to submit Minimum two standard size drawing sheets(A2) in this unit for portfolio evaluation).

Q1. Draw the three principal views of the given component. & Create Solid Model.

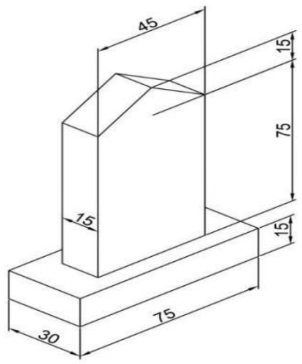

Q2. Draw the three principal views of the given component. & Create Solid Model.

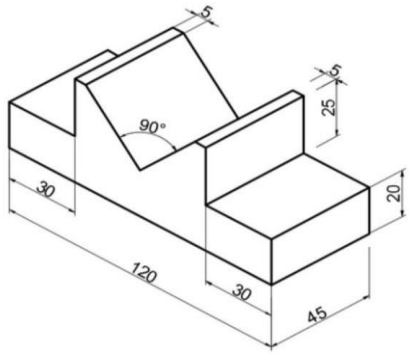

3. Draw the three principal views of the given component. & Create Solid Model.

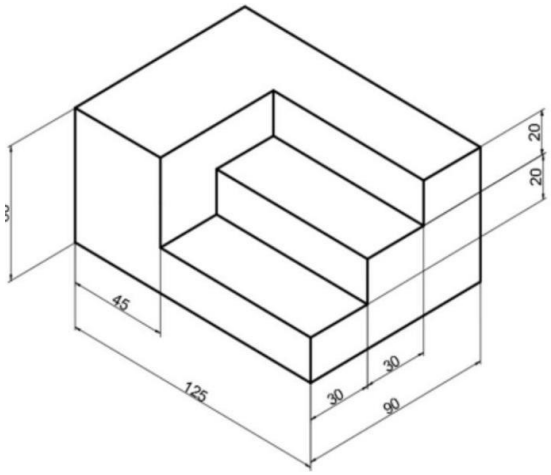

4. Draw the three principal views of the given component. & Create Solid Model.

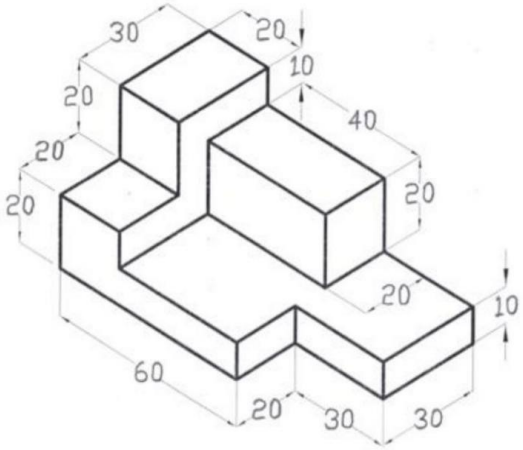

Q5. Draw the three principal views of the given component. & Create Solid Model.

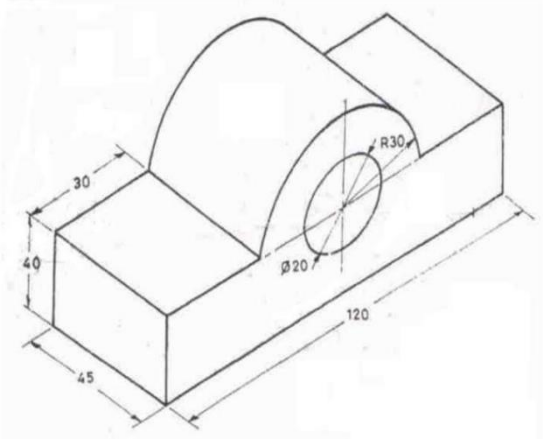

Q6 Draw the three principal views of the given component. & Create Solid Model.

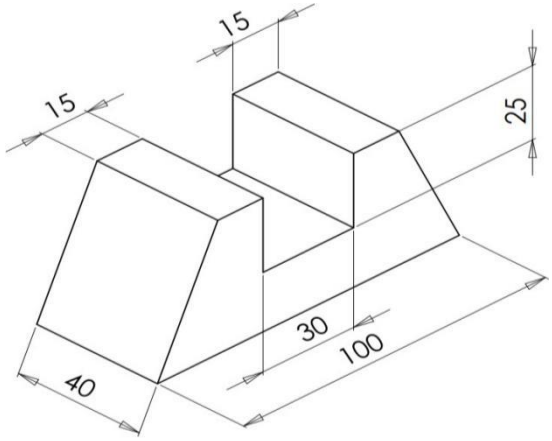

7. Draw the three principal views of the given component. & Create Solid Model.

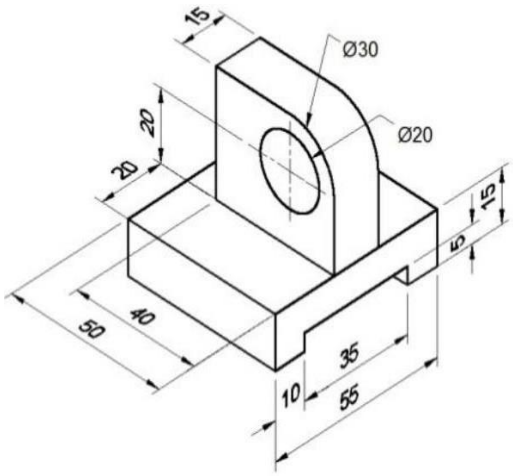

8 Draw the three principal views of the given component. & Create Solid Model.

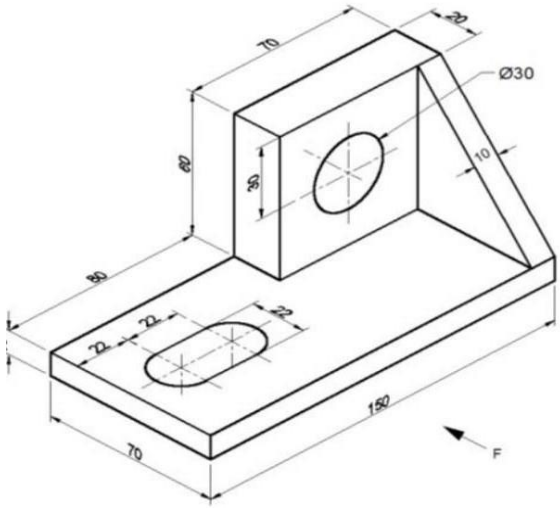

9 Create 3D model using CAD for the component whose orthographic views are given below

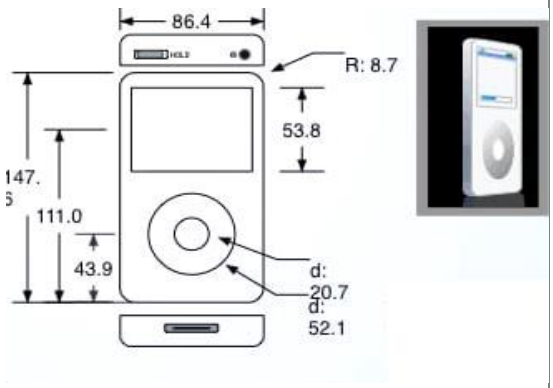

10 Create 3D model using CAD for the component whose orthographic views are given below

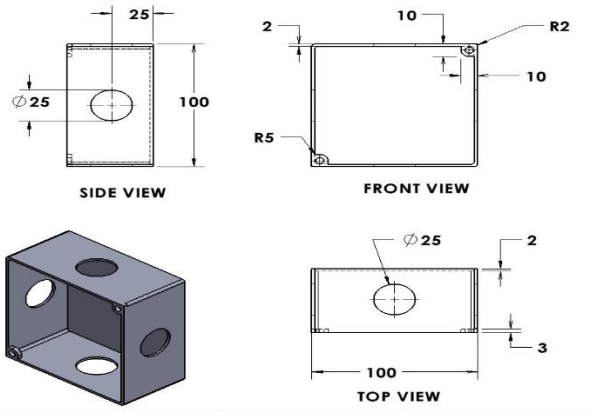
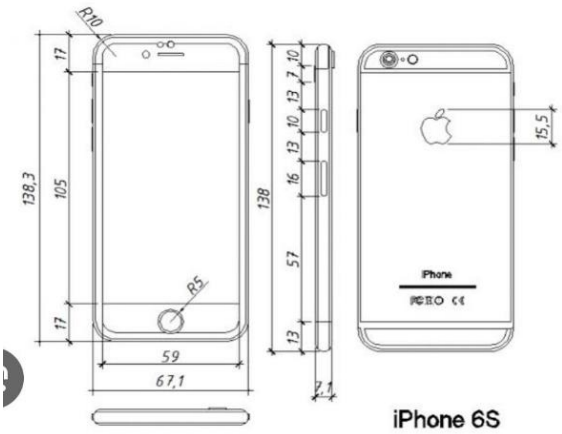
11 Create 3D model using CAD for the component whose orthographic views are given below