## Wire colours

| | | | |
|---|---|---|---|
| **Bl** | Blue | **Rs** | Pink |
| **Br** | Brown | **Rt** | Red |
| **Ge** | Yellow | **Sw** | Black |
| **Gr** | Gray | **Vi** | Violet |
| **Gn** | Green | **Ws** | White |
| **Or** | Orange | **Tr** | Transparent |

## Key to items

1 Battery
2 Ignition switch
3 B+ distribution box
4 Front power distribution box
9 Data link connector
160 Unloader relay
161 Driver's seat heater switch
162 Passenger's seat heater switch
163 Driver's seat heater
164 Driver's seat back heater
165 Passenger's seat heater
166 Passenger's seat back heater
167 Driver's seat control switch
168 Passenger's seat control switch
169 Driver's seat back recliner motor
170 Driver's seat height motor
171 Driver's seat movement motor
172 Driver's seat cushion tilt motor
173 Passenger's seat back recliner motor
174 Passenger's seat height motor
175 Passenger's seat movement motor
176 Passenger's seat cushion tilt motor
177 ABS control module/hydraulic unit
178 LH front speed sensor
179 LH rear speed sensor
180 RH front speed sensor
181 RH rear speed sensor

H31914

### Typical heated seats

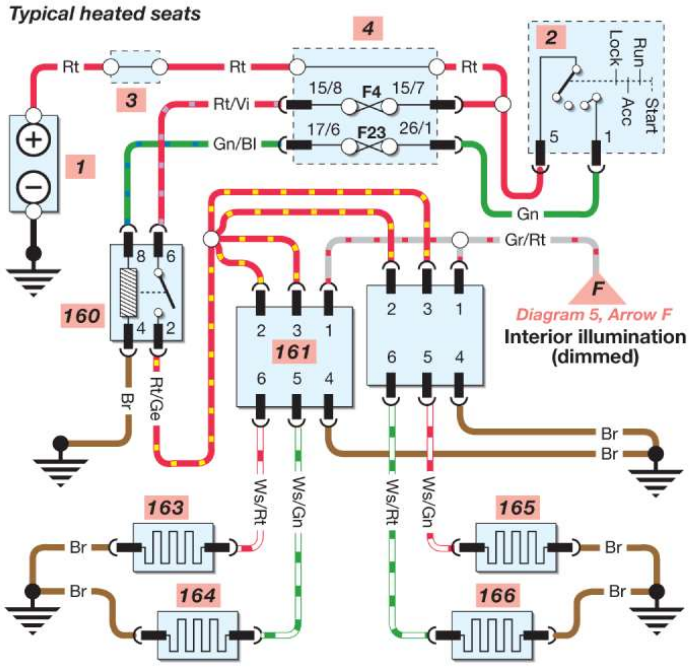


### Typical ABS/AST

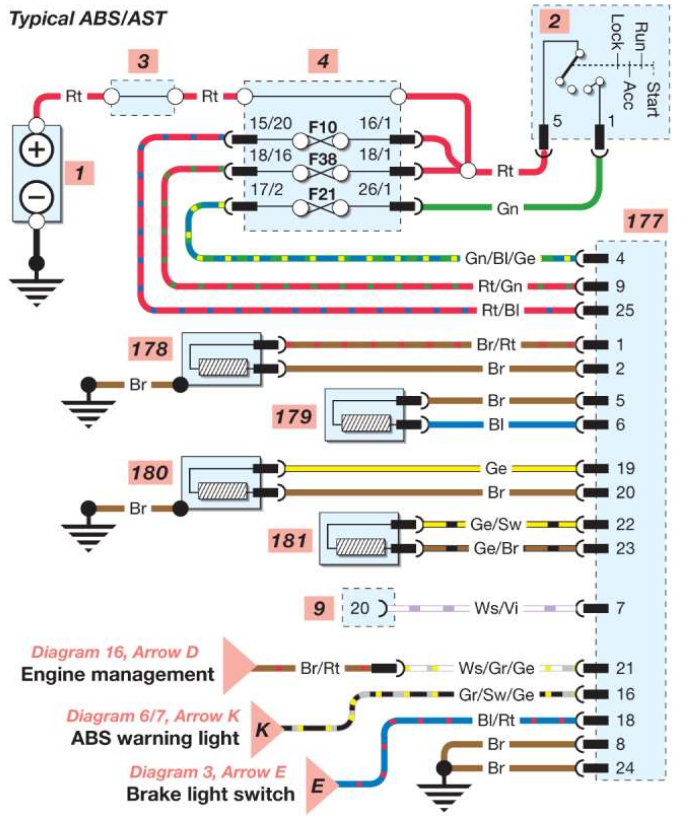

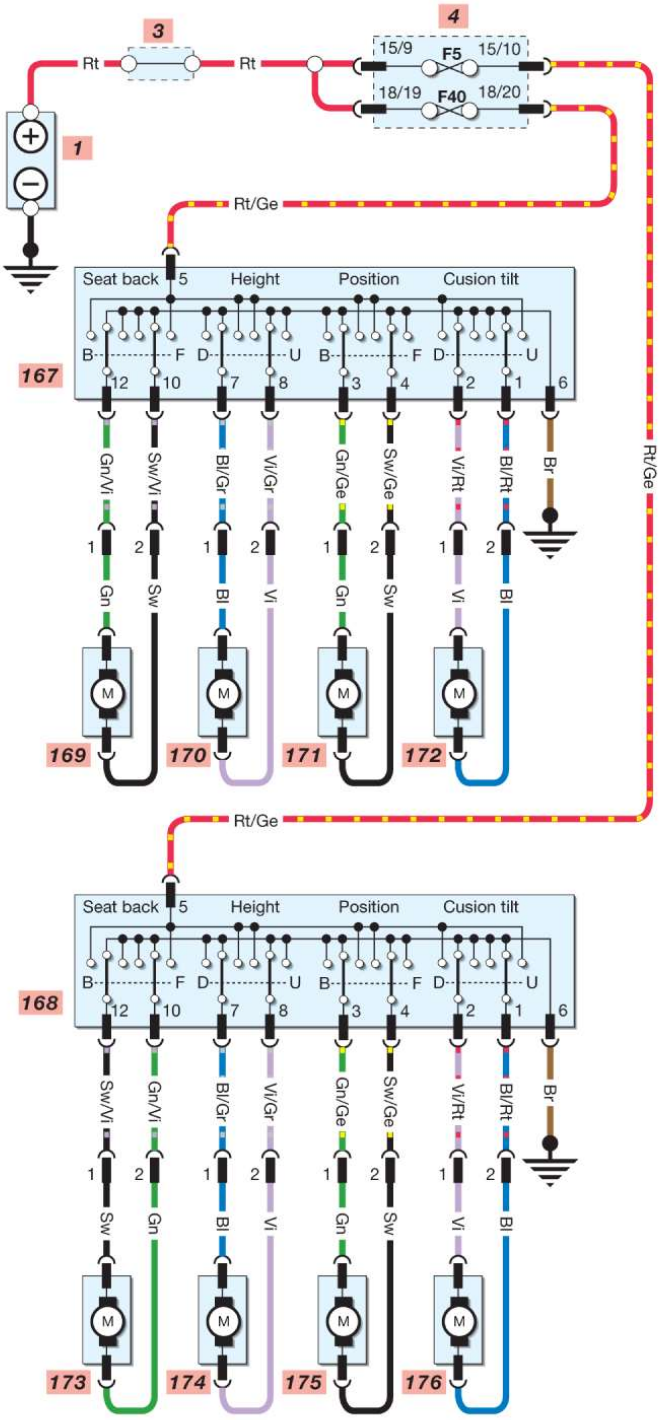
### Typical power seats