Wire colours

Bl	Blue	**Rs**	Pink
Br	Brown	**Rt**	Red
Ge	Yellow	**Sw**	Black
Gr	Gray	**Vi**	Violet
Gn	Green	**Ws**	White
Or	Orange	**Tr**	Transparent

Key to items

1 Battery
2 Ignition switch
3 B+ distribution box
4 Front power distribution box
10 Light switch
43 Body electronics control module
65 Dimmer unit
66 Wash/wipe module
67 Cassette box light
68 Front ashtray light
69 Rear ashtray light
70 Front cigar lighter light
71 Gear shift indicator
72 Transmission position indicator light
73 Horn relay
74 Horn switch
75 LH horn
76 RH horn
77 Rear defogger relay
78 Rear defogger
79 Integrated heating and climate control switch
80 Rear defogger switch
81 Antenna amplifier
82 Mirror control switch
83 Driver's mirror assembly
84 Passenger's mirror assembly

H31908

Typical switch illumination

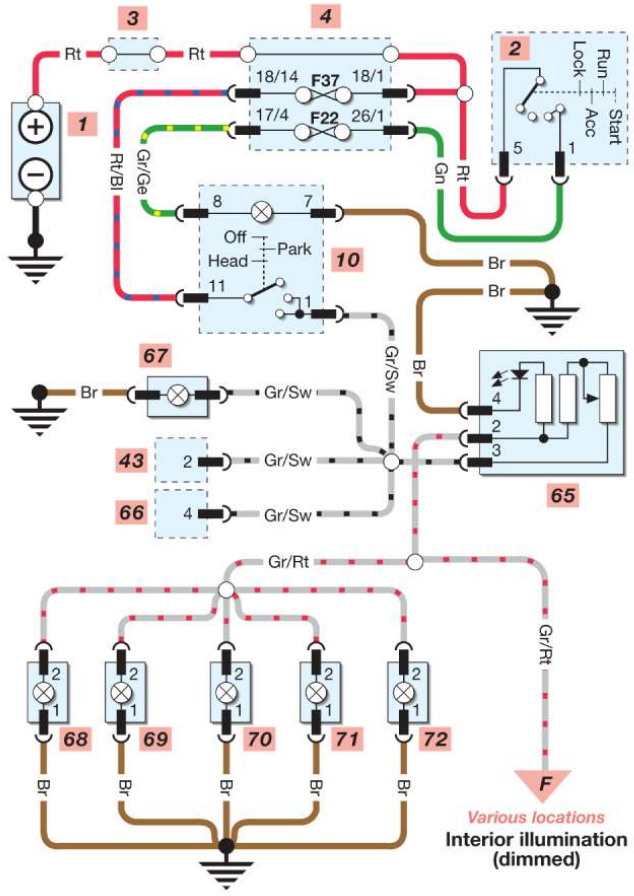

Typical heated rear window

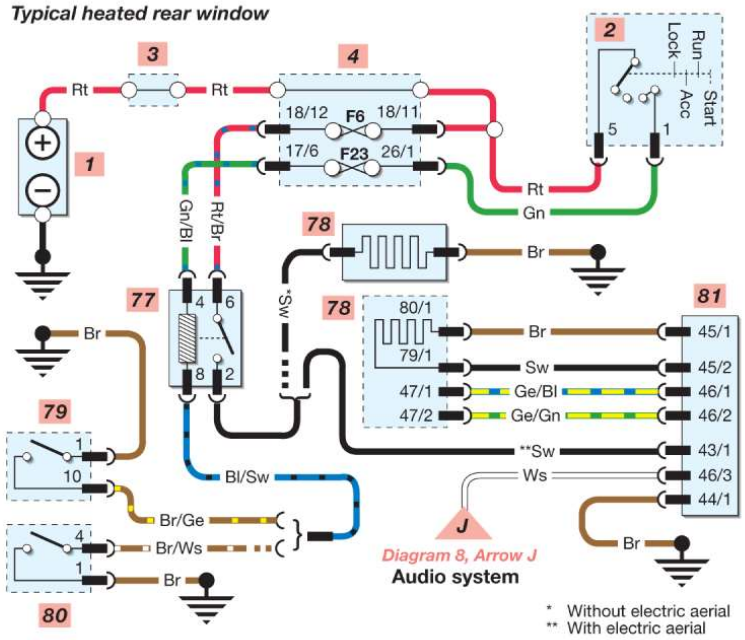

Typical power mirrors

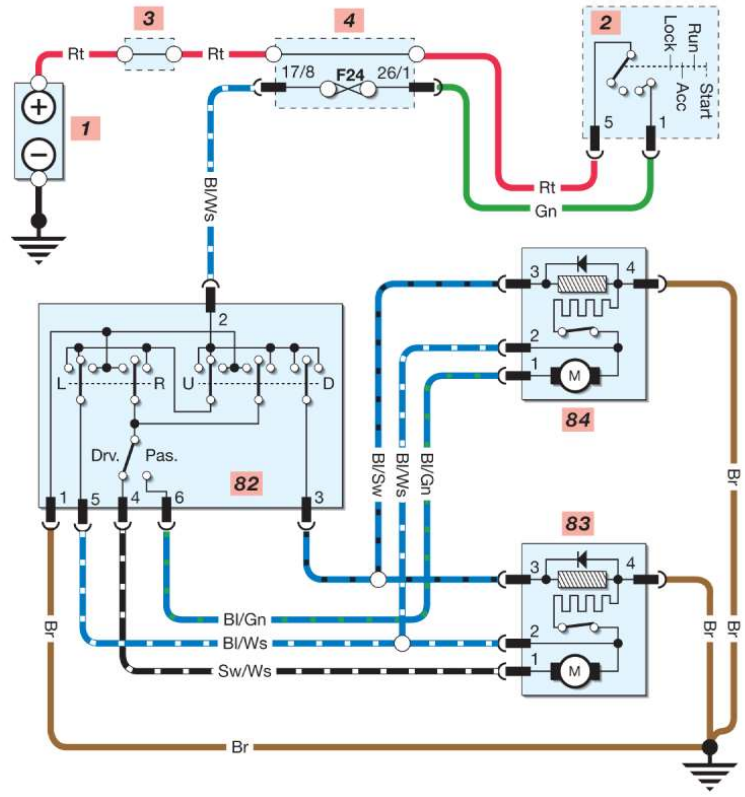
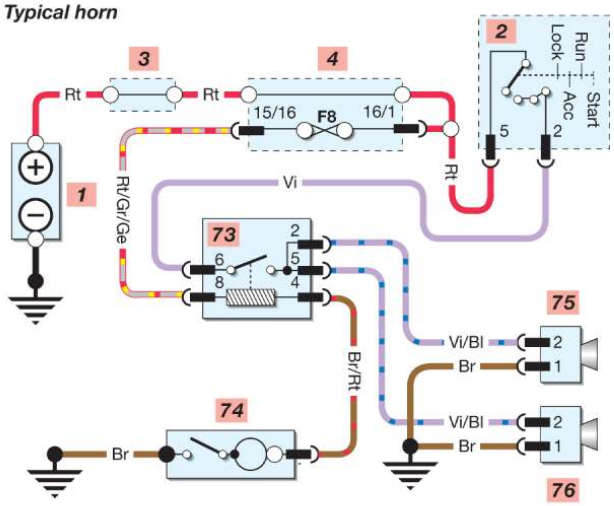
Typical horn