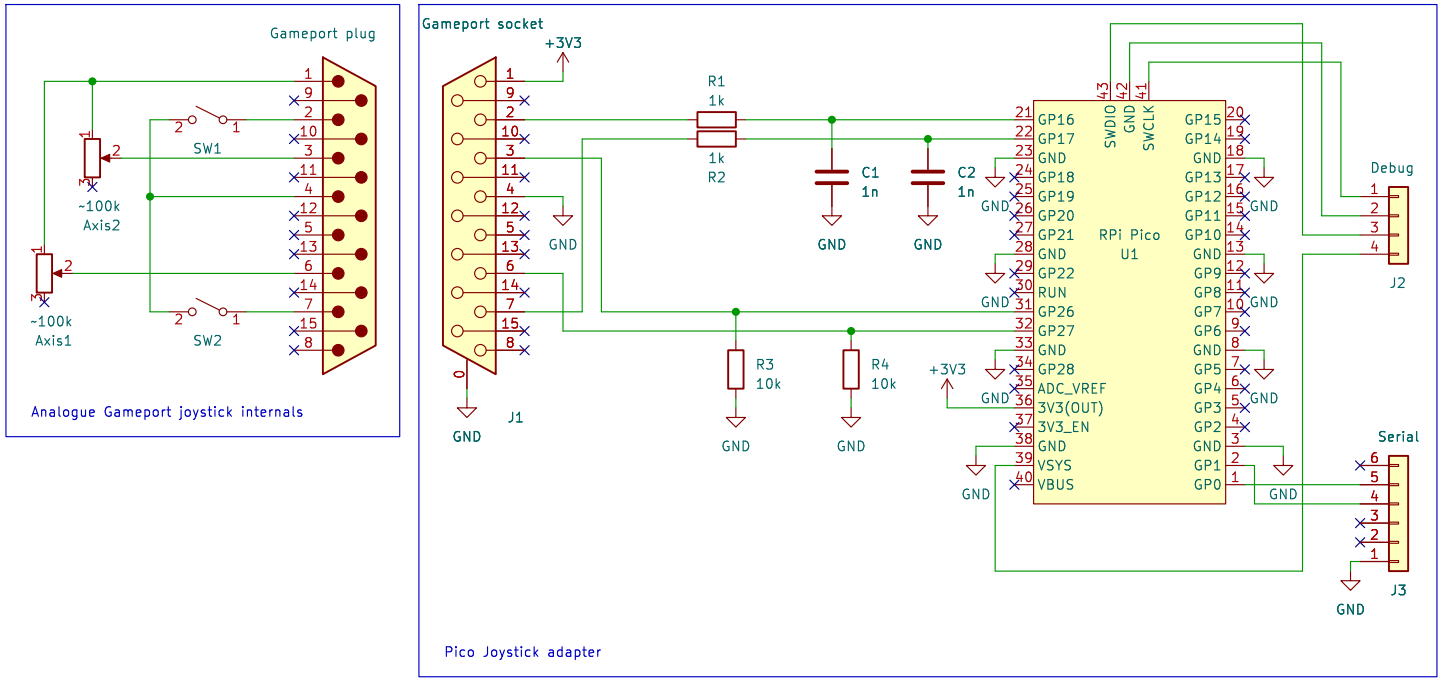

Alan Reed

Sheet: /

File: pico-joystick.kicad_sch

Title: Pico Joystick schematic

Size: A4	Date: 2023-05-02	**Rev: 1**
KiCad E.D.A. kicad 7.0.1		Id: 1/1