Printer Dover

Spruce version 11.2 -- spooler version 11.2

File: IFU-Rev-Cg.sil etc.

Creation date: 8-Aug-80 11:47:32

For: Spruce

25 total sheets = 24 pages, 1 copy.

Problems encountered:
Font HELVETICA24B substituted for font HELVE24.
Not impl.: brightness, hue, saturation, show-object, show-dots-opaque, dots from files.
Not impl.: brightness, hue, saturation, show-object, show-dots-opaque, dots from files.
Not impl.: brightness, hue, saturation, show-object, show-dots-opaque, dots from files.
Not impl.: brightness, hue, saturation, show-object, show-dots-opaque, dots from files.

DORADO SCHEMATICS

Instruction Fetch Unit

Table of contents

TITLE	Page
Mememory Request Logic	01
IFData, Jumps, and Exceptions	02
Loads and DVs	03
FF Decodes	04
Byte Bit Sclice	05
Instruction Bit Slice	06
Instruction Address Bit Slice	07
PC Bit Slice (High byte)	08
PC Bit Slice (Low byte)	09
Pc Pipe Control	10
Chip Control	11
Ifu Ram Control	12
Event Counter A	13
Event Counter B	14
Wakeups/Temperature Sensor	15
Midas control and multiplexors	16
Midas control and multiplexors	17
Clock distribution	18
Layout Upper Left quadrant	19
Layout Upper Right quadrant	20
Layout Lower Left quadrant	21
Layout Lower Right quadrant	22
IF Data Selector Prom	23

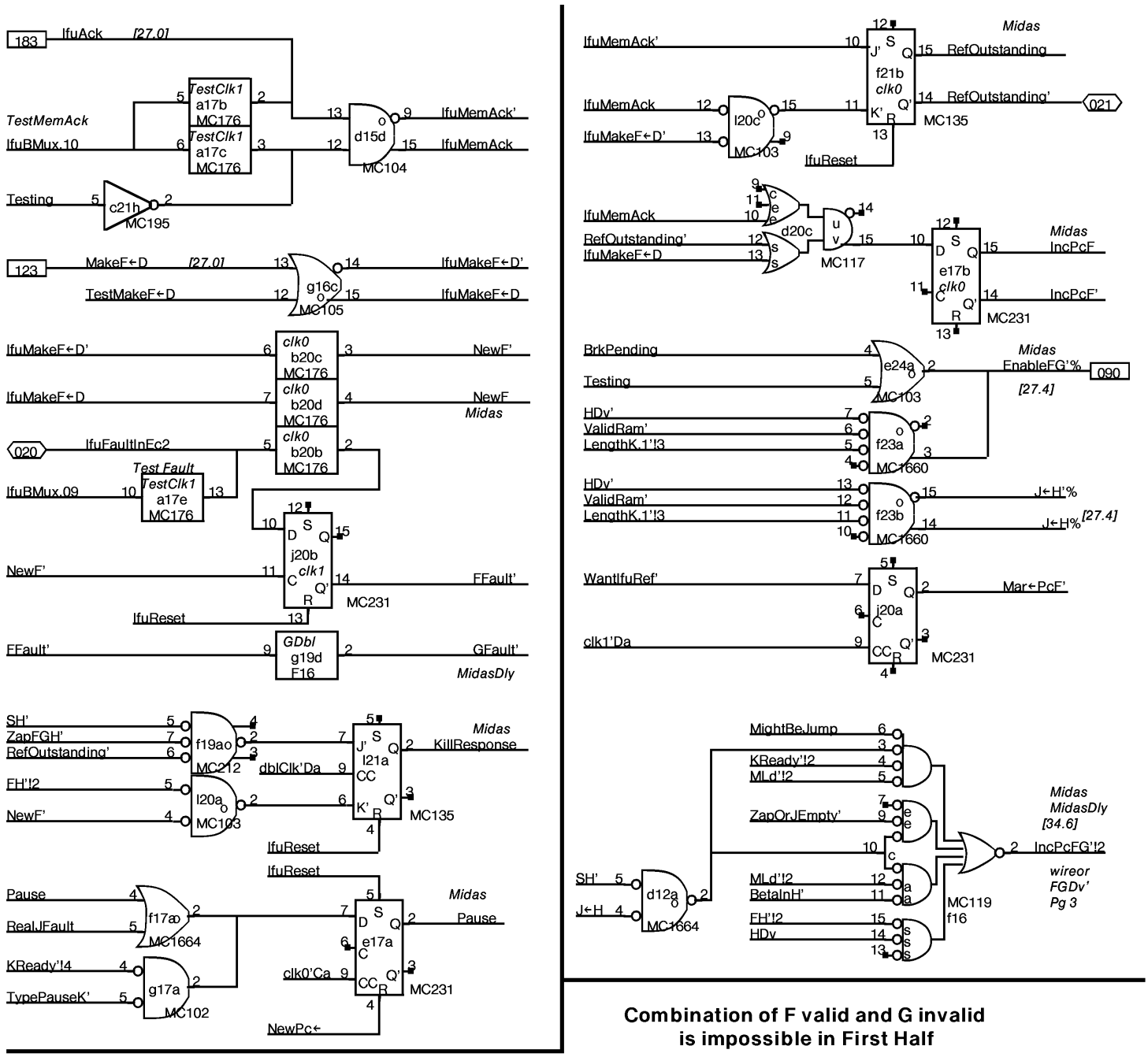

Combination of F valid and G invalid is impossible in First Half

Can't detect the holes created by X←M or AlphaM←H because the Loads aren't ready until after T1, due to Hold

(B←pipe...)

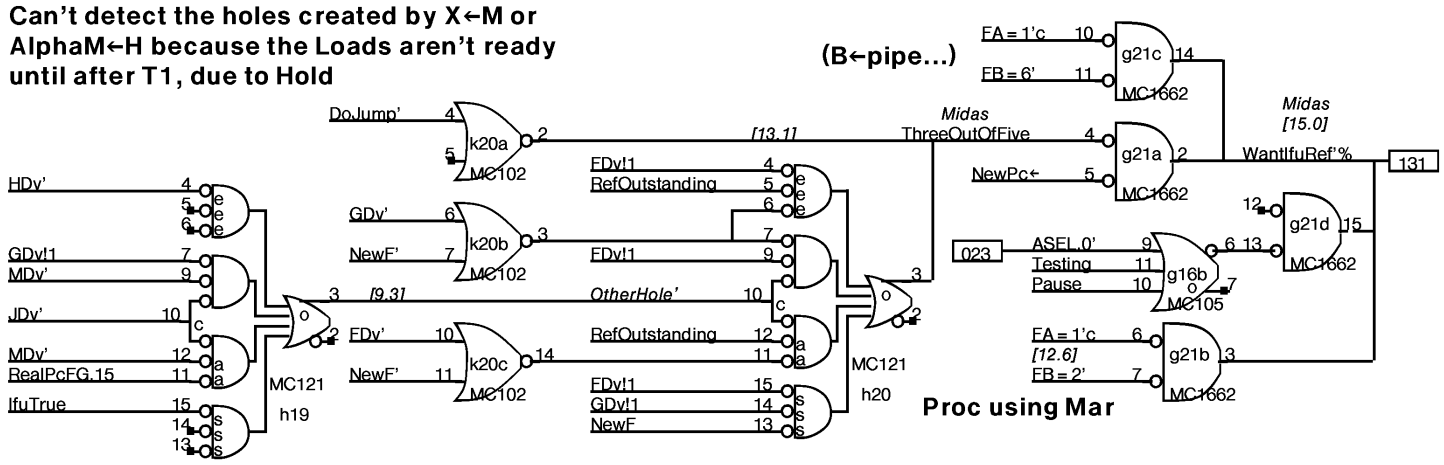

XEROX PARC	Project		File	Designer	Rev	Date	Page
	Dorado	IFU Mem Req Logic	ifu01.sil	S. Ornstein	Cg	10/19/79	01

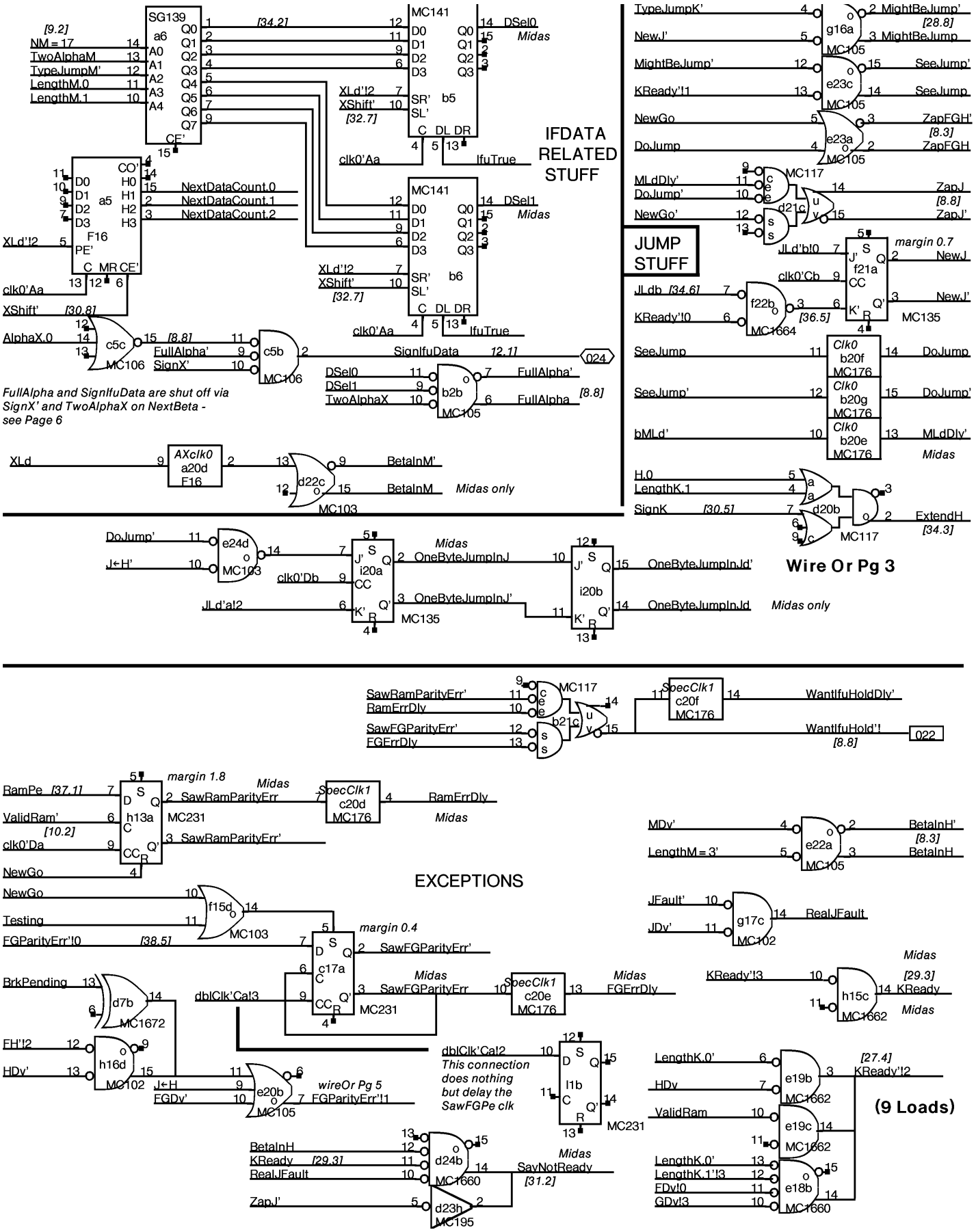

XEROX PARC	Project		File	Designer	Rev	Date	Page
	Dorado	Ifdata,Jumps, & Exceptions	ifu02.sil	S. Ornstein	Cg	12/28/79	02

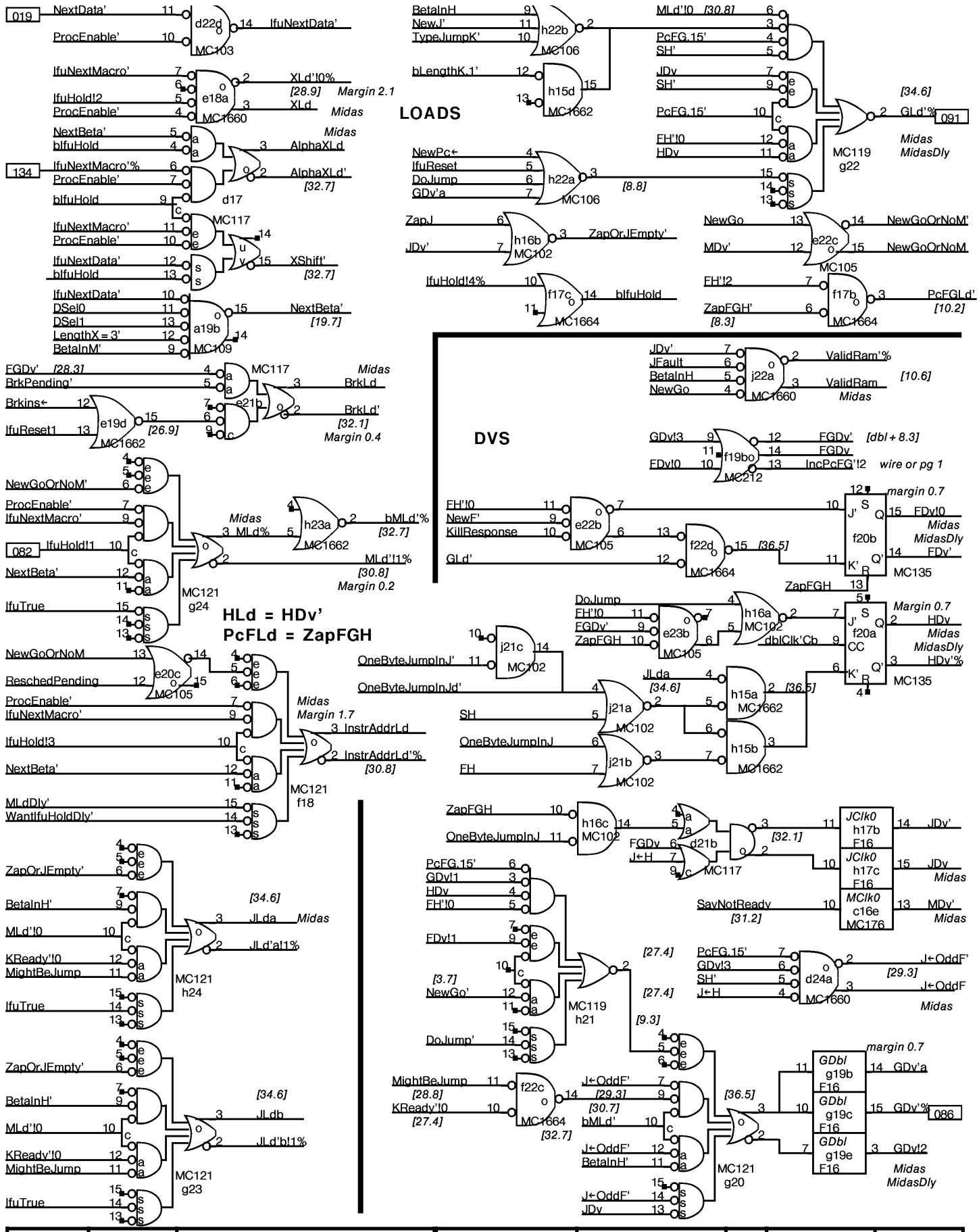

XEROX PARC	Project	File	Designer	Rev	Date	Page
	Dorado	ifu03.sil	S.Ornstein	Cg	10/19/79	03

Loads and DVs

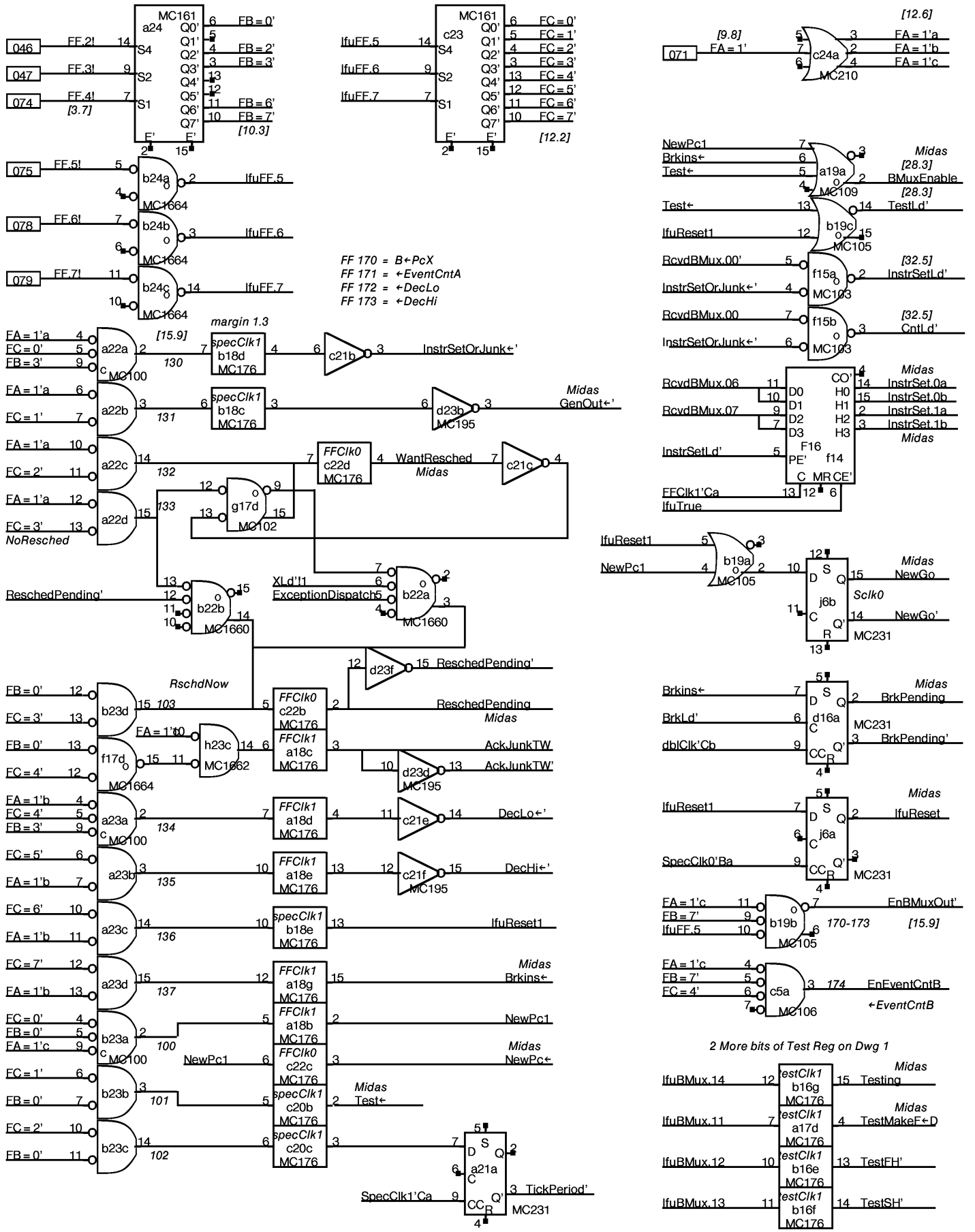

XEROX PARC	Project	File	Designer	Rev	Date	Page
	Dorado — FF Decodes	ifu04.sil	S. Ornstein	Cg	8/08/80	04

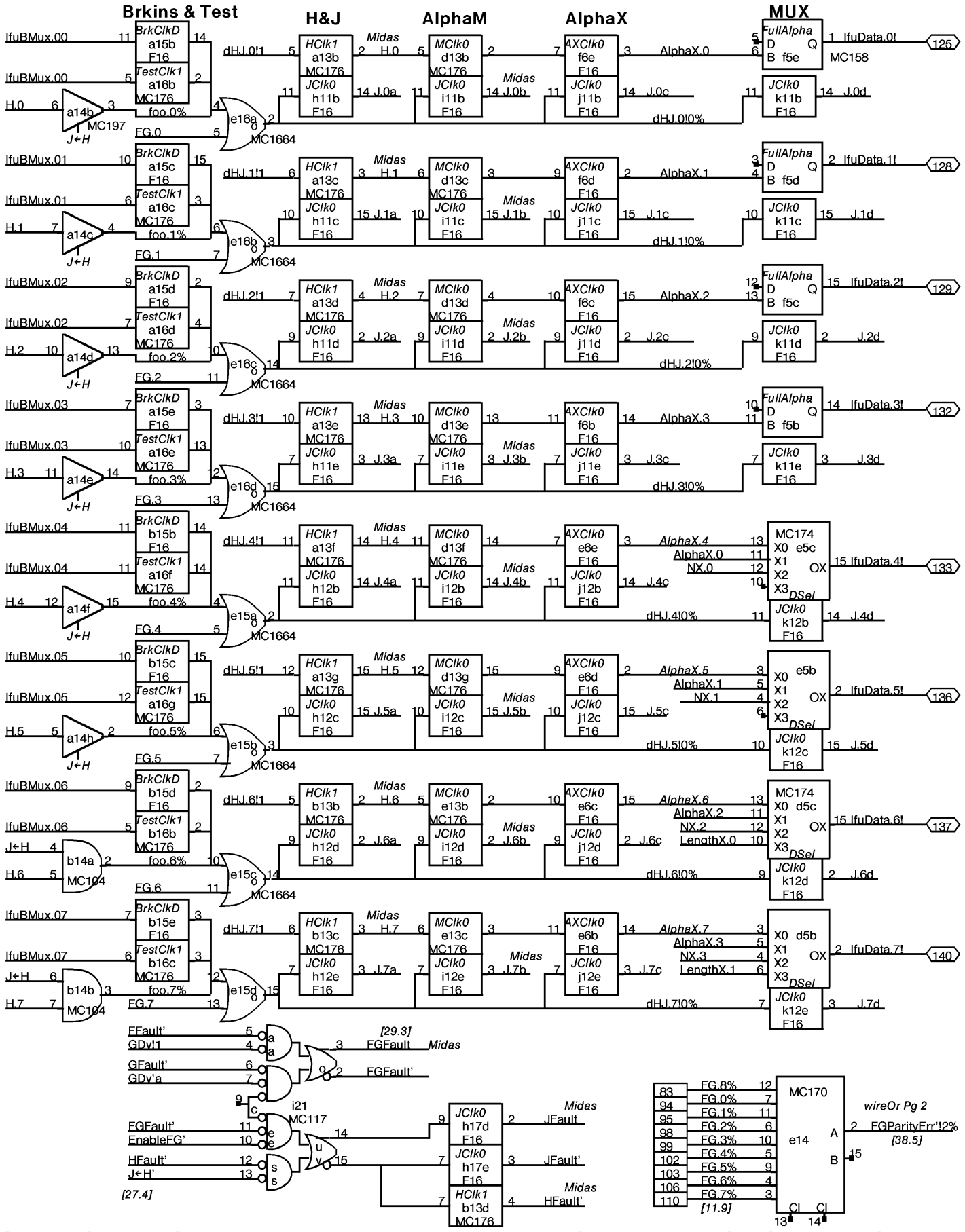

XEROX PARC	Project	Byte Bit Slice	File	Designer	Rev	Date	Page
	Dorado		ifu05.sil	S. Ornstein	Cg	8/23/79	05

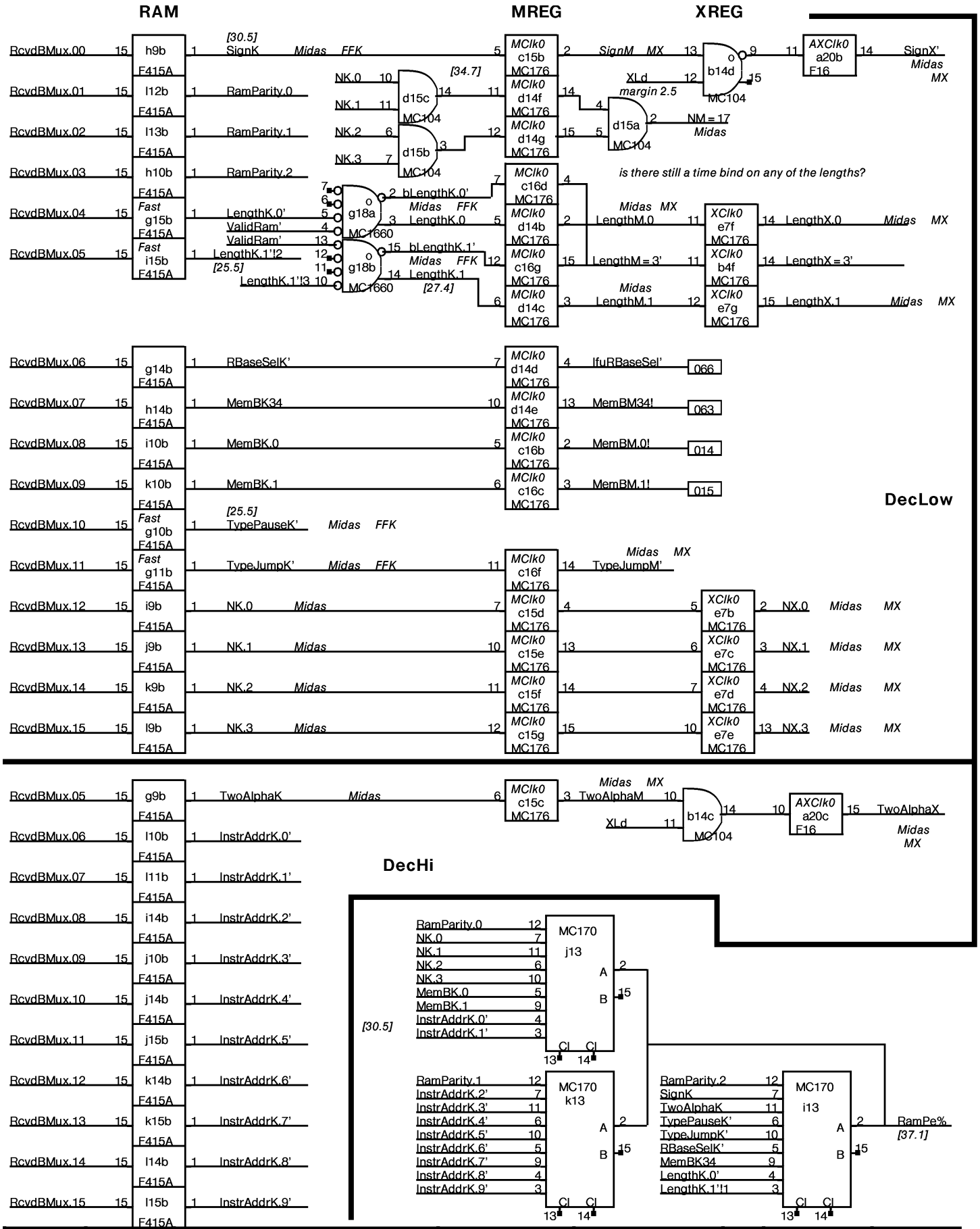

XEROX PARC	Project	File	Designer	Rev	Date	Page
	Dorado	Instr Bit Slice	lfu06.sil	S. Ornstein	Cg	8/23/79	06

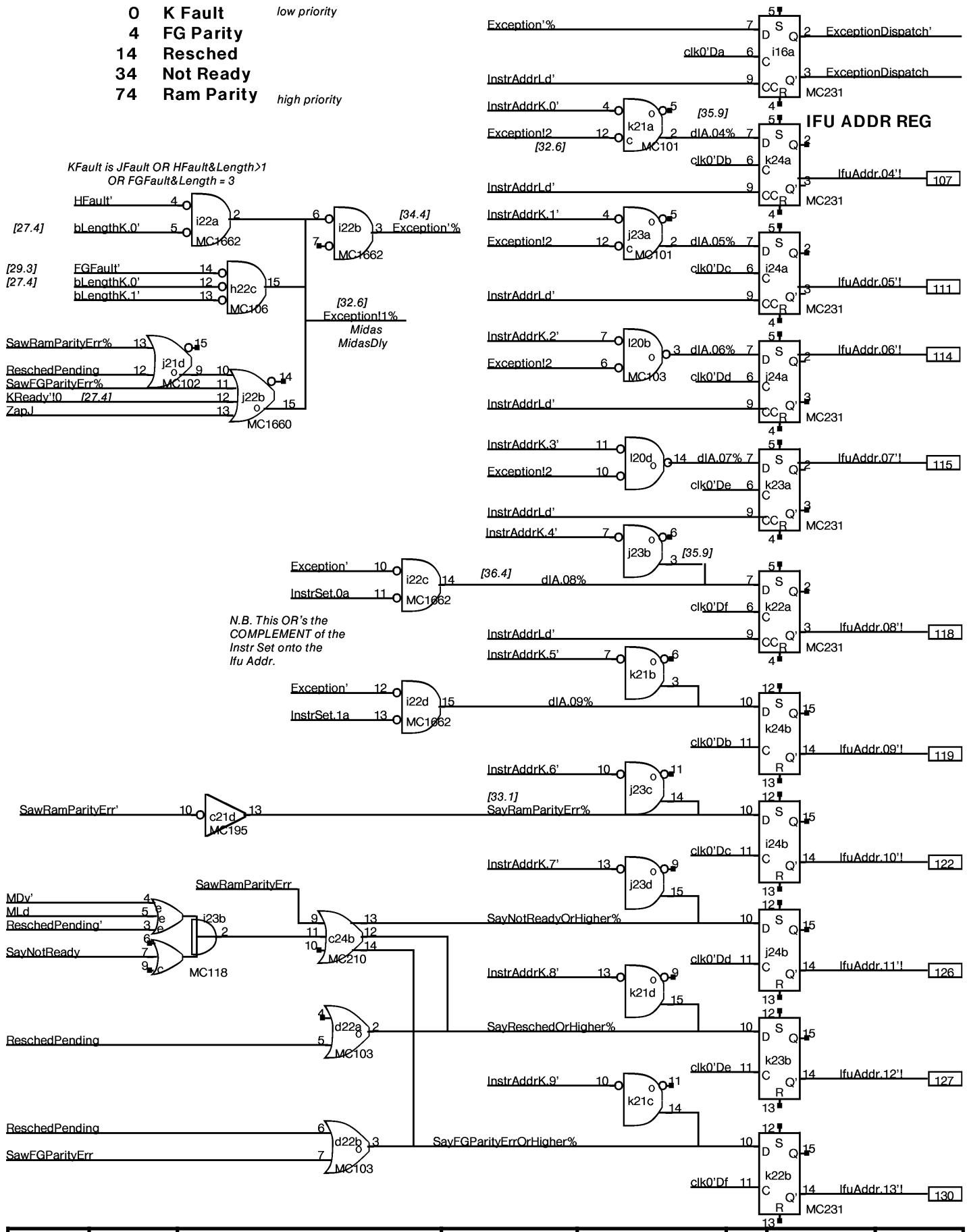

XEROX PARC	Project		File	Designer	Rev	Date	Page
	Dorado	InstrAddr Bit Slice	ifu07.sil	S. Ornstein	Cg	8/08/80	07

THE HIGH ORDER BYTE OF THE PC PIPE

PcJ loads on JLd And not J←H, increments on JLd
PcF Loads on ZapFGH and increments on IncPcF
ALU turns of on BMuxEnable or BrkPending or IfuReset1
PcFG loads on PcFGLd and increments on IncPcFG

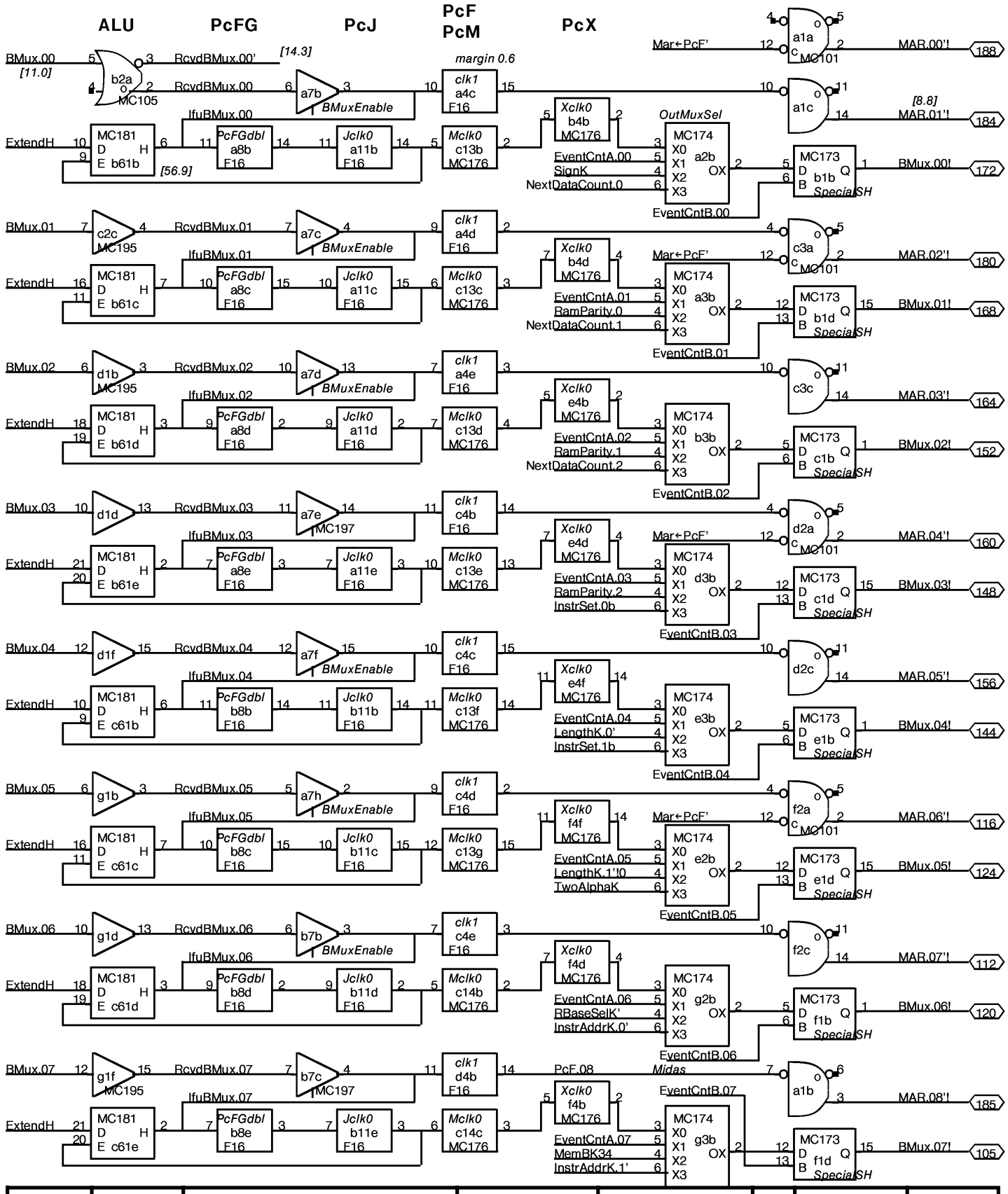

XEROX PARC	Project		File	Designer	Rev	Date	Page
	Dorado	PC Bit Slice (High byte)	Ifu08.sil	S. Ornstein	Cg	8/23/79	08

THE LOW ORDER BYTE OF THE PC PIPE

PcJ loads on JLd and not J←H, increments on JLd
PcF loads on ZapFGH and increments on IncPcF
ALU turns off on BMuxEnable or BrkPending or IfuReset
PcFG loads on PcFGLd and increments on IncPcFG

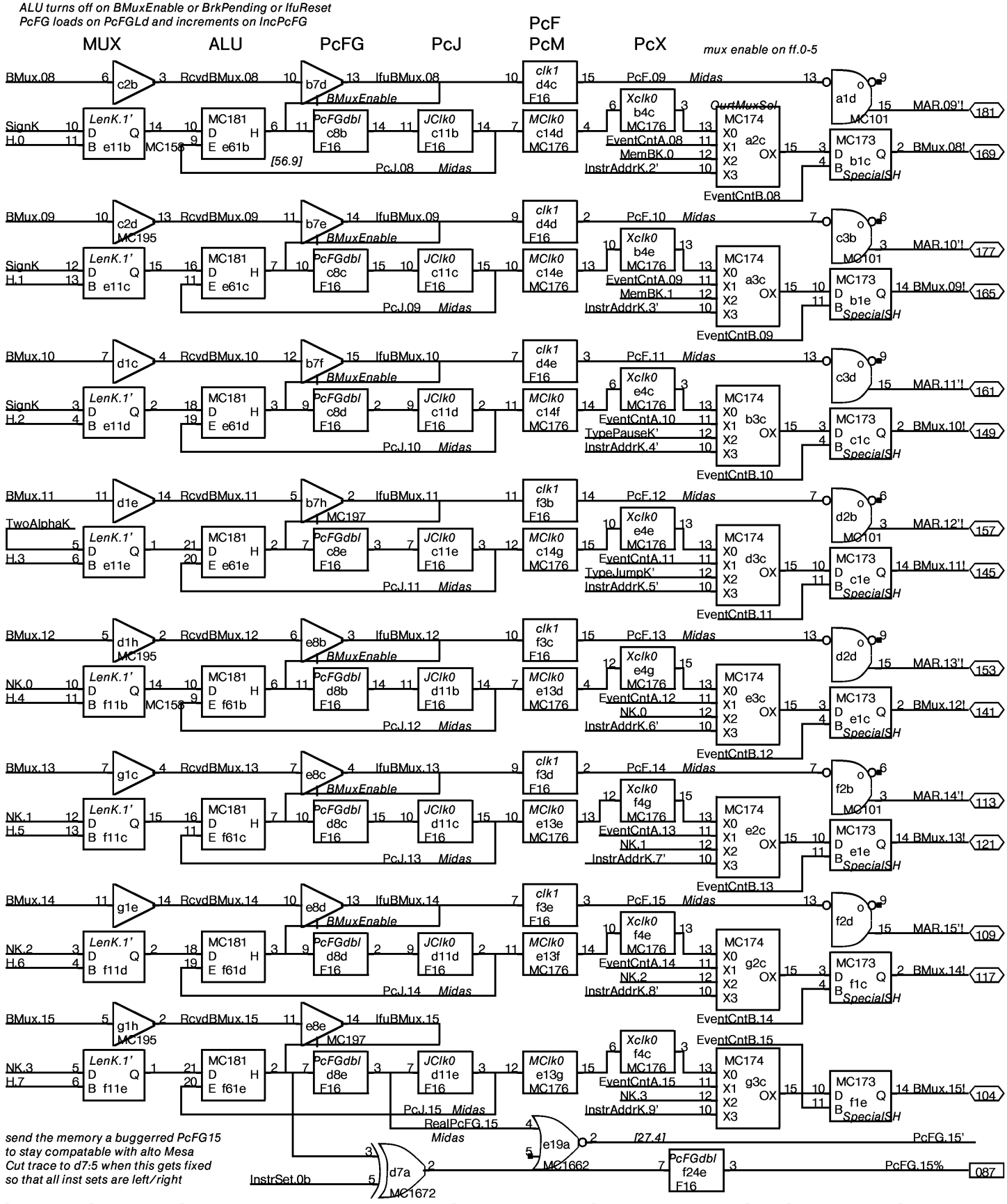

XEROX PARC	Project		File	Designer	Rev	Date	Page
	Dorado	PC Bit Slice *(low byte)*	ifu09.sil	S. Ornstein	Cg	8/14/79	09

PcF Control

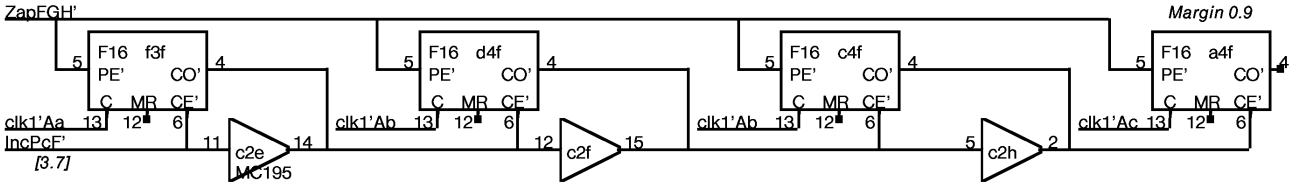

ALU Control

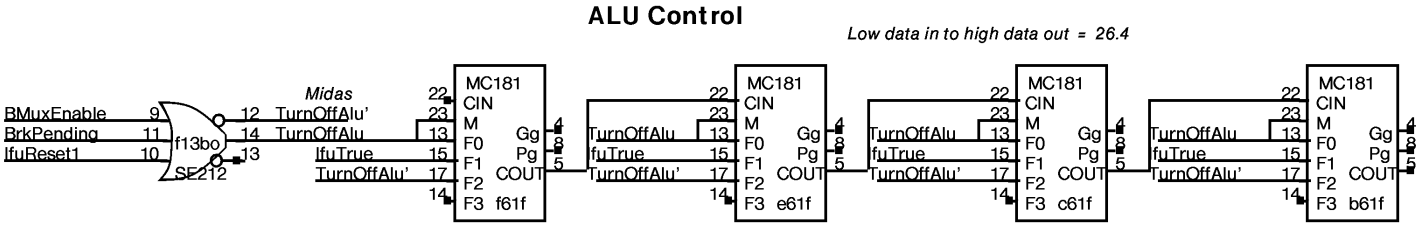

PcFG Control

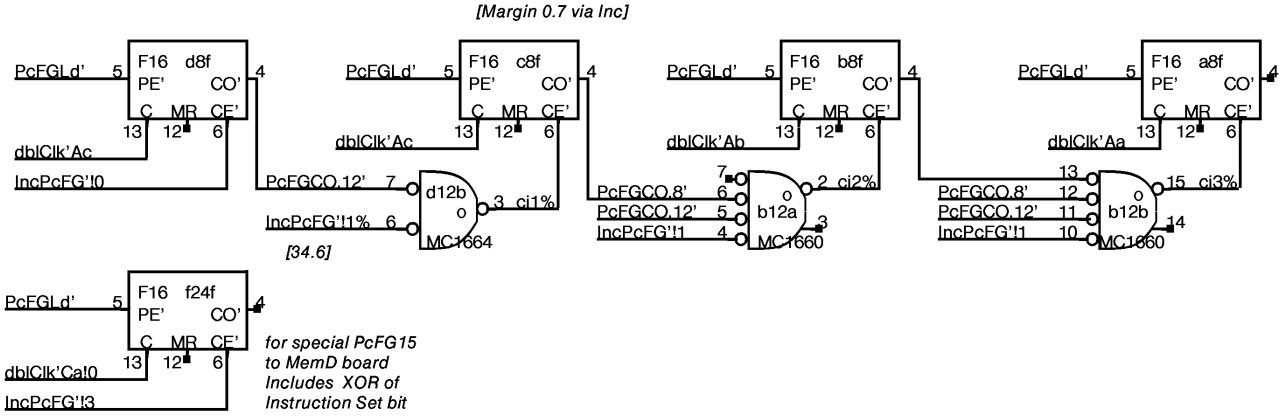

PcJ Control

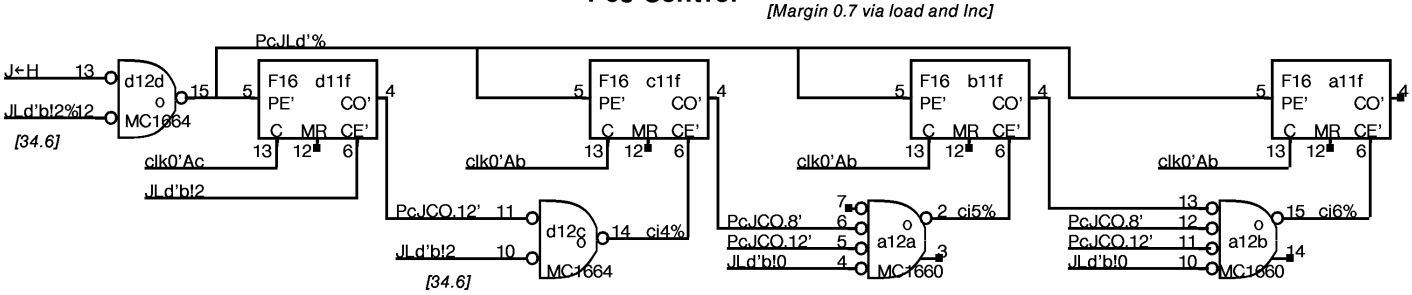

XEROX PARC	Project	File	Designer	Rev	Date	Page
	Dorado	Pc Control	ifu10.sil	S. Ornstein	Cg	8/23/79	10

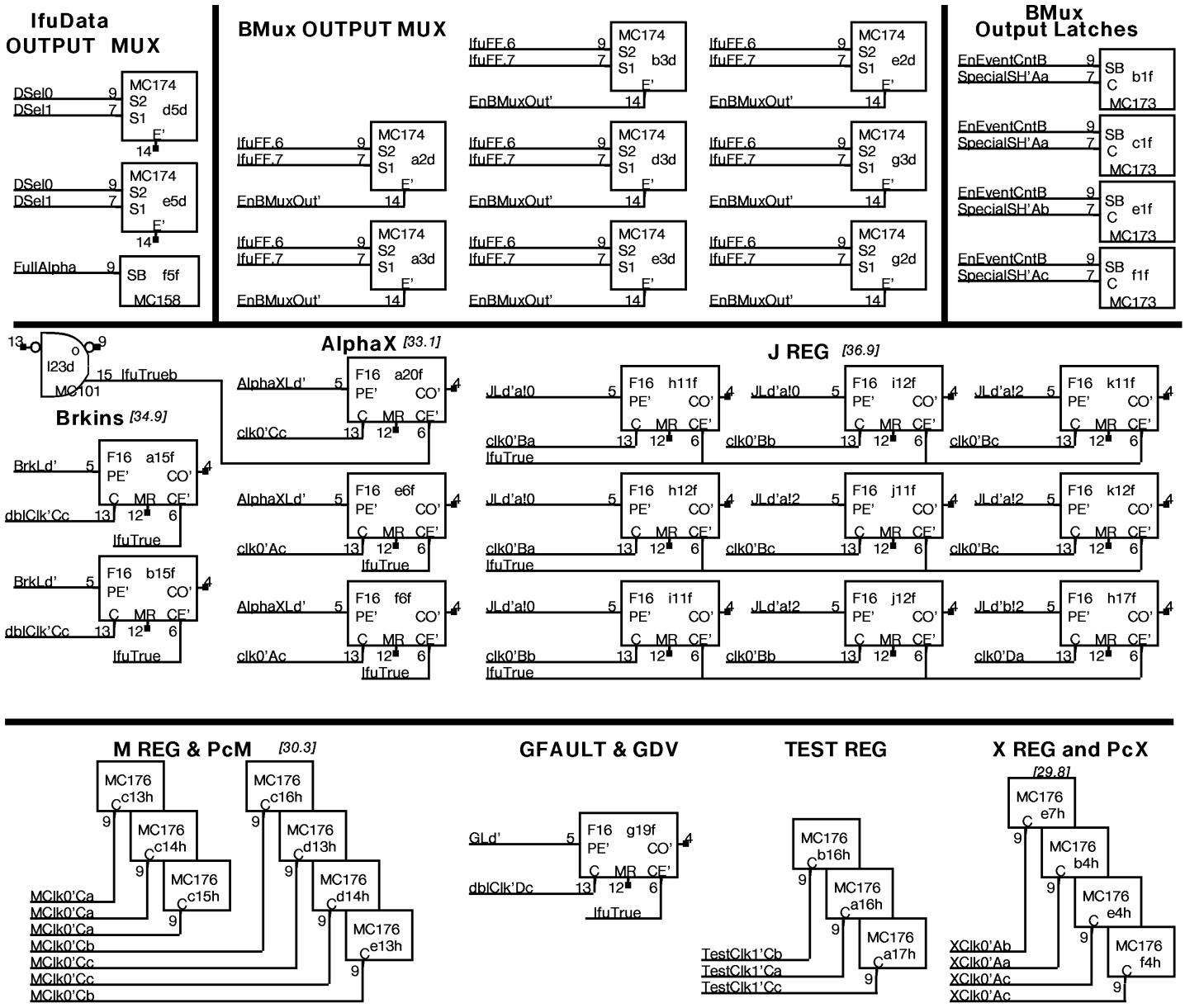

XEROX PARC	Project	File	Designer	Rev	Date	Page
	Dorado	CHIP CONTROL	ifu11.sil	S. Ornstein	Cg	8/23/79	11

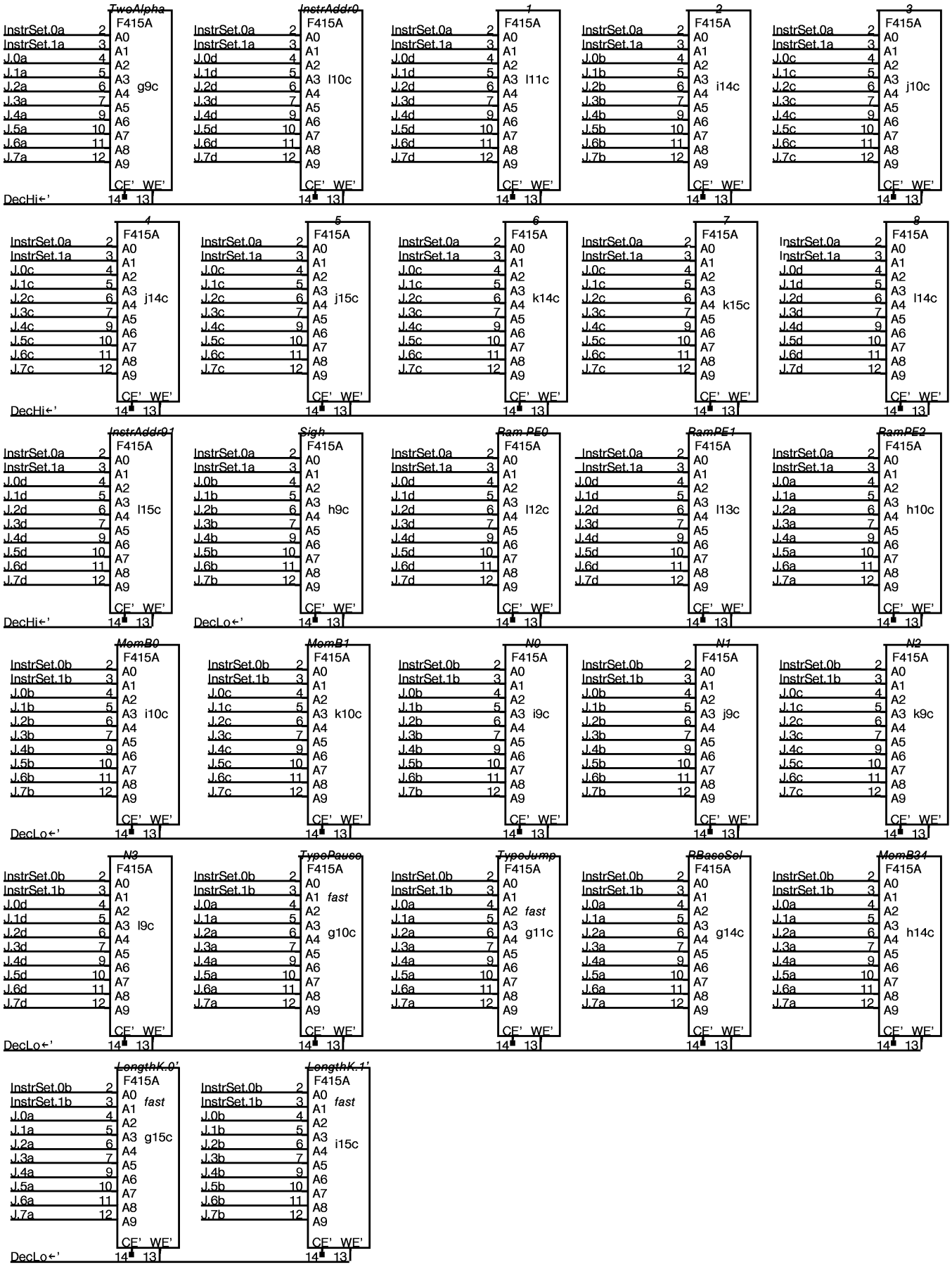

XEROX PARC	Project	File	Designer	Rev	Date	Page
	Dorado	ifu12.sil	S. Ornstein	Cg	8/23/79	12

Ram Control

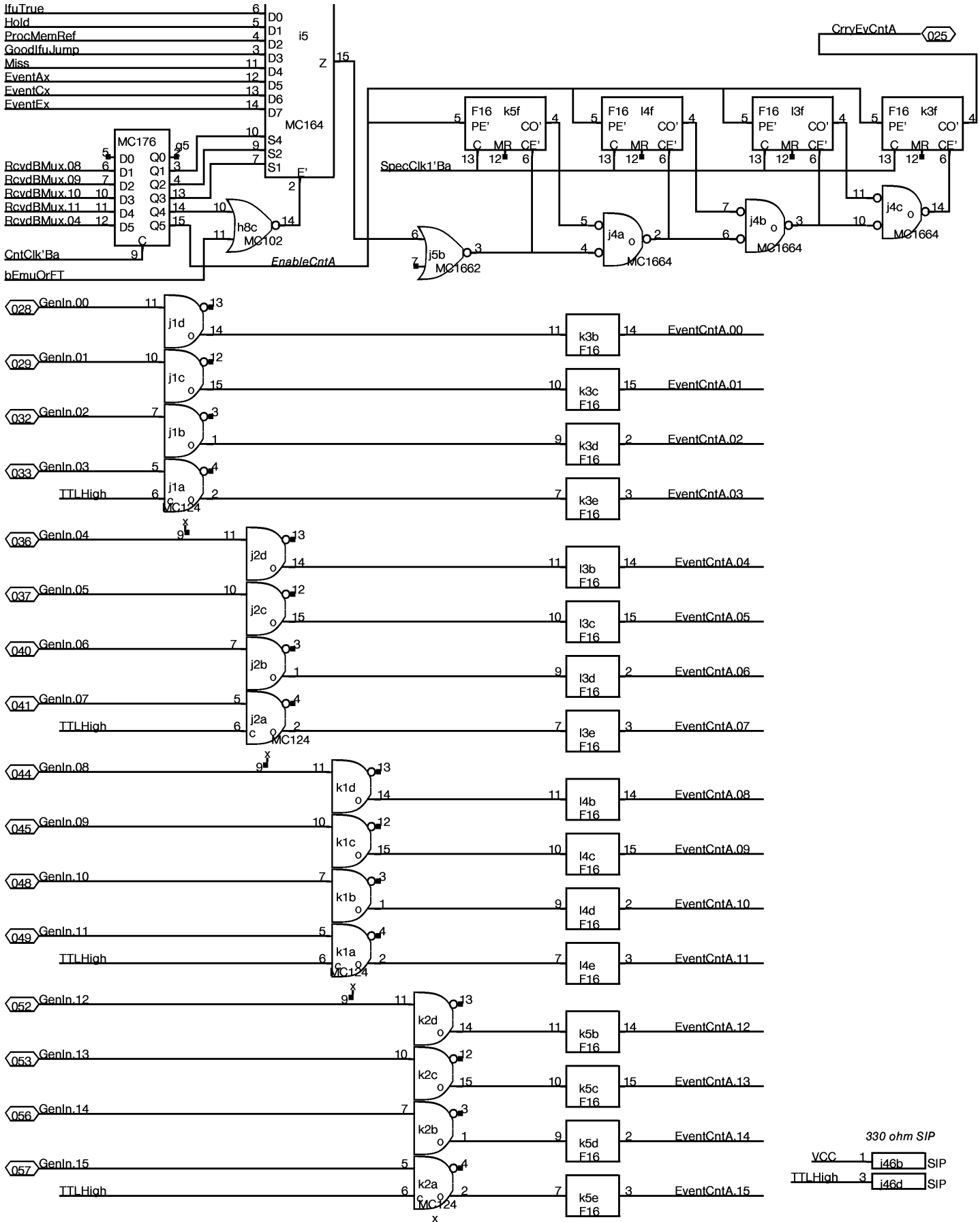

XEROX PARC	Project	File	Designer	Rev	Date	Page
	Dorado	Event CounterA	ifu13.sil	S. Ornstein	Cg	1/12/80	13

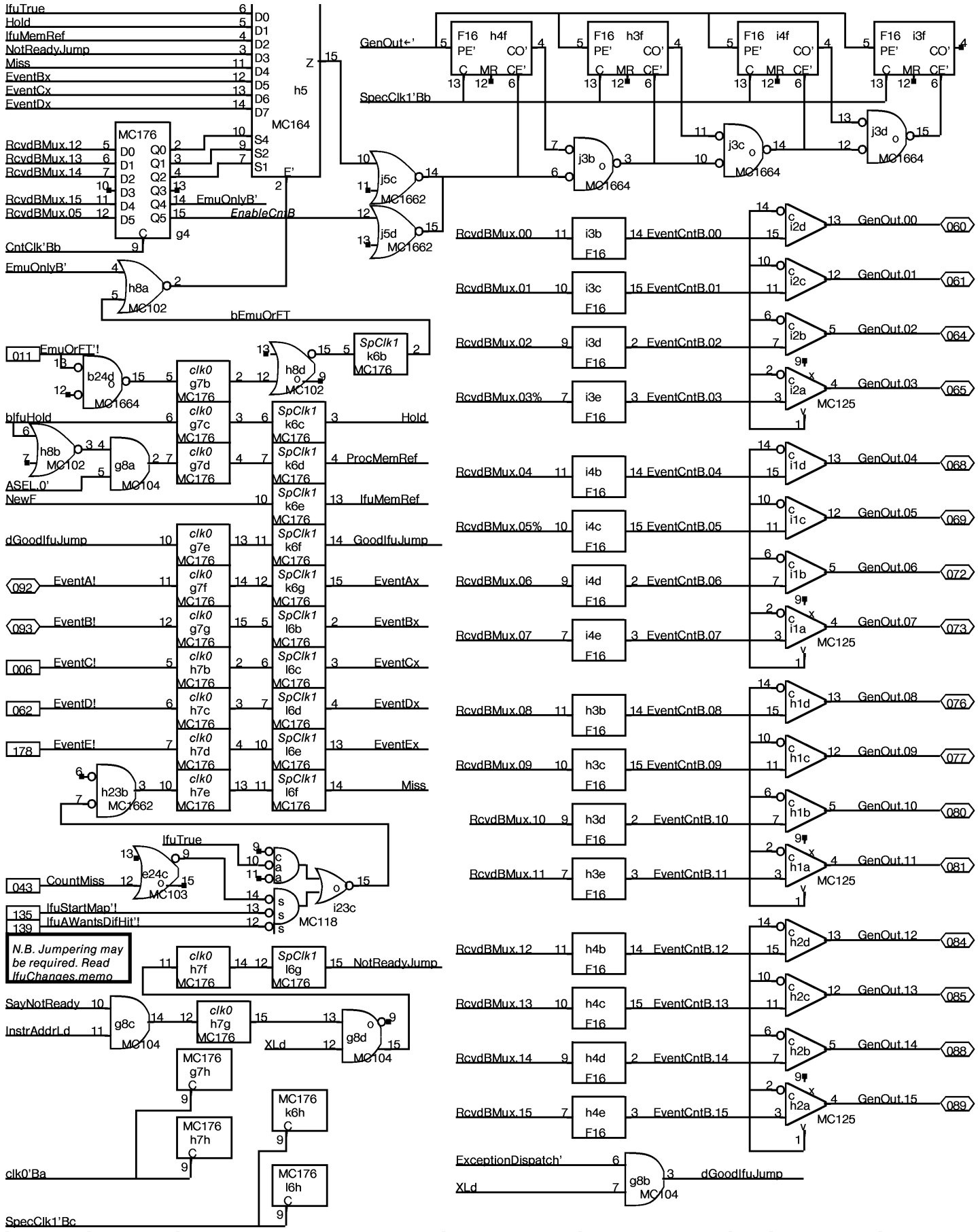

XEROX PARC	Project	Event Counter B	File	Designer	Rev	Date	Page
	Dorado		ifu14.sil	S. Ornstein	Cg	12/21/79	14

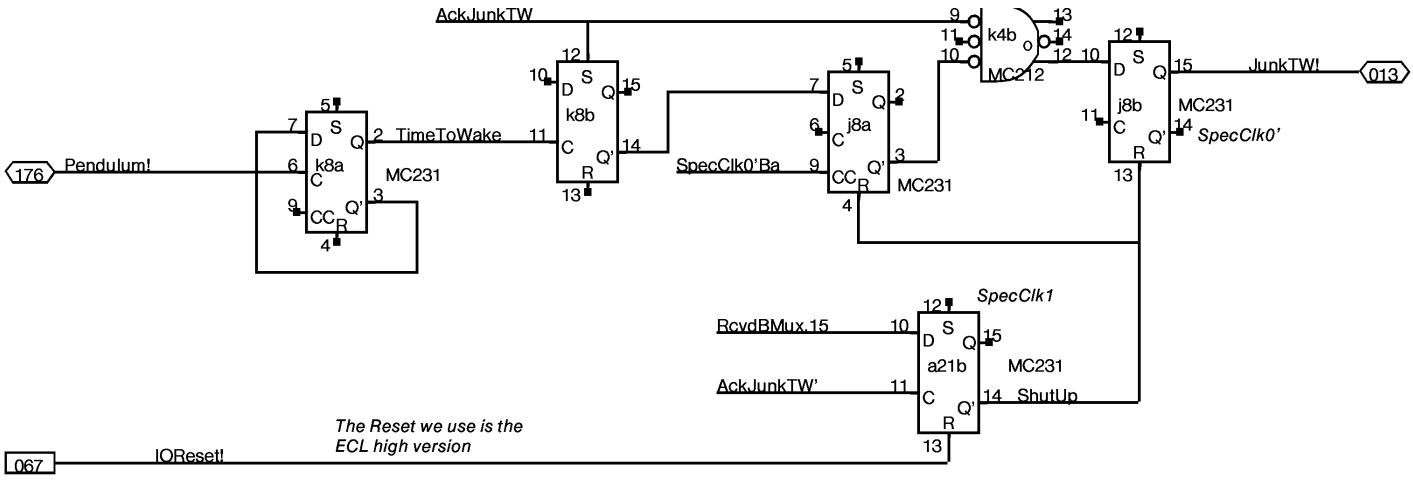

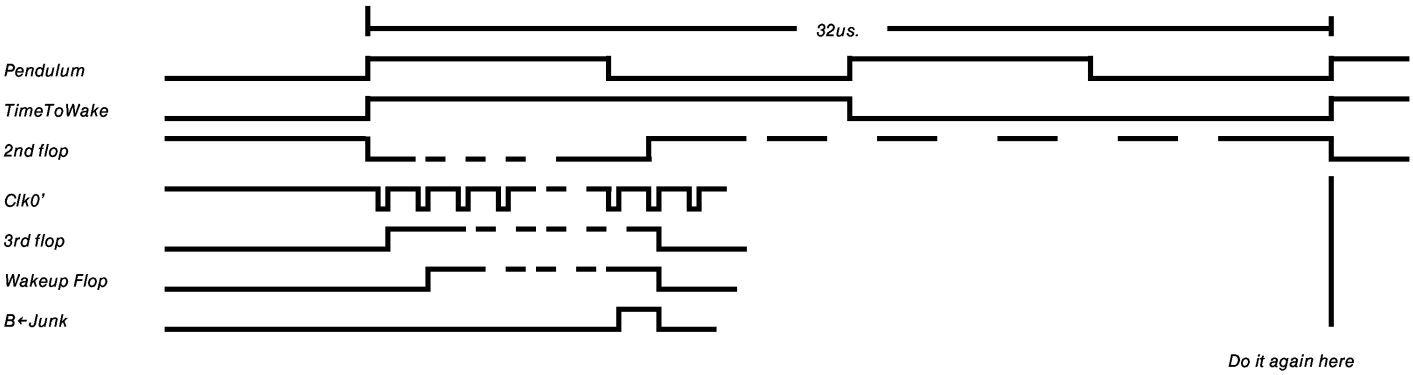

Temperature Sensor

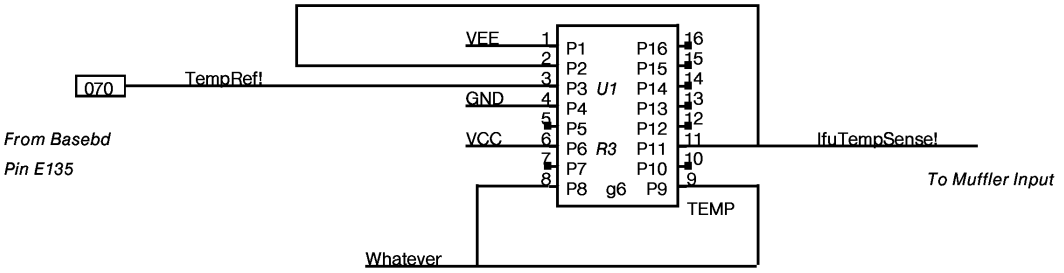

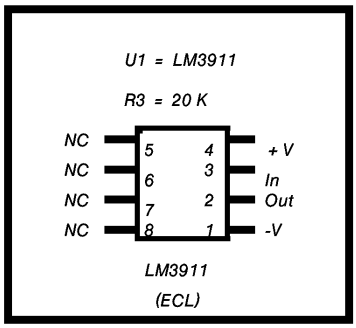

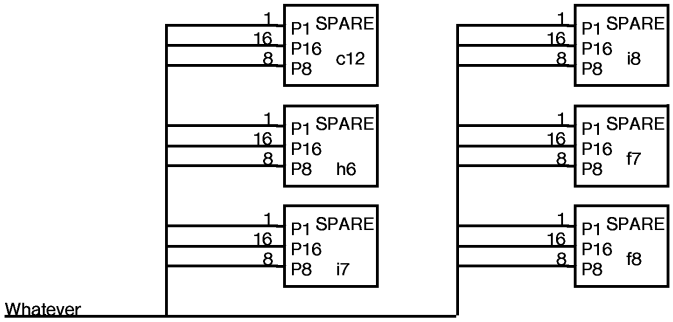

XEROX PARC	Project	File	Designer	Rev	Date	Page
	Dorado	ifu15.sil	S. Ornstein	Cg	1/12/80	15
	Wakeups/Temp Sensor					

Muffler Control

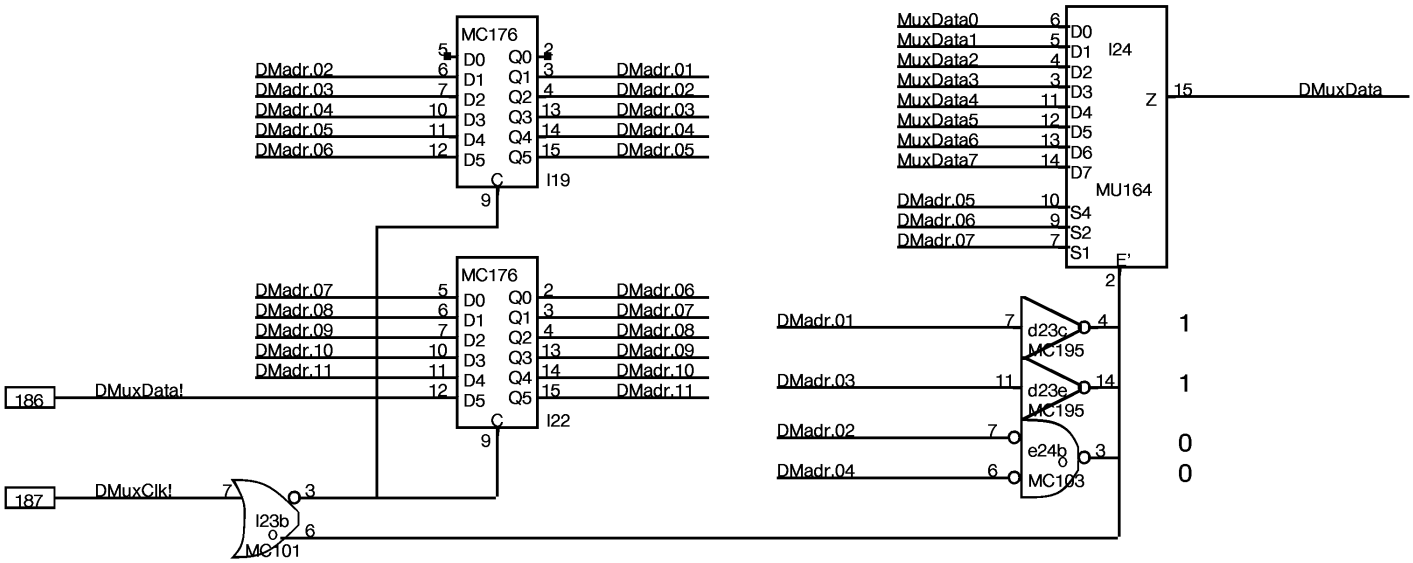

We respond to 2400 thru 2577
Tho we are allocated to 2777

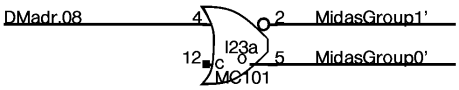

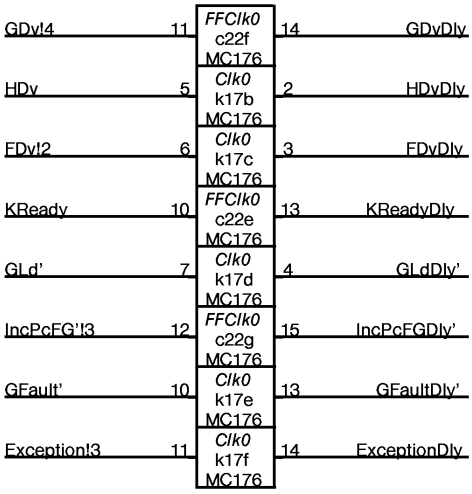

XEROX PARC	Project		File	Designer	Rev	Date	Page
	Dorado	DMUX CONTROL	lfu16.sil	S. Ornstein	Cg	8/23/79	16

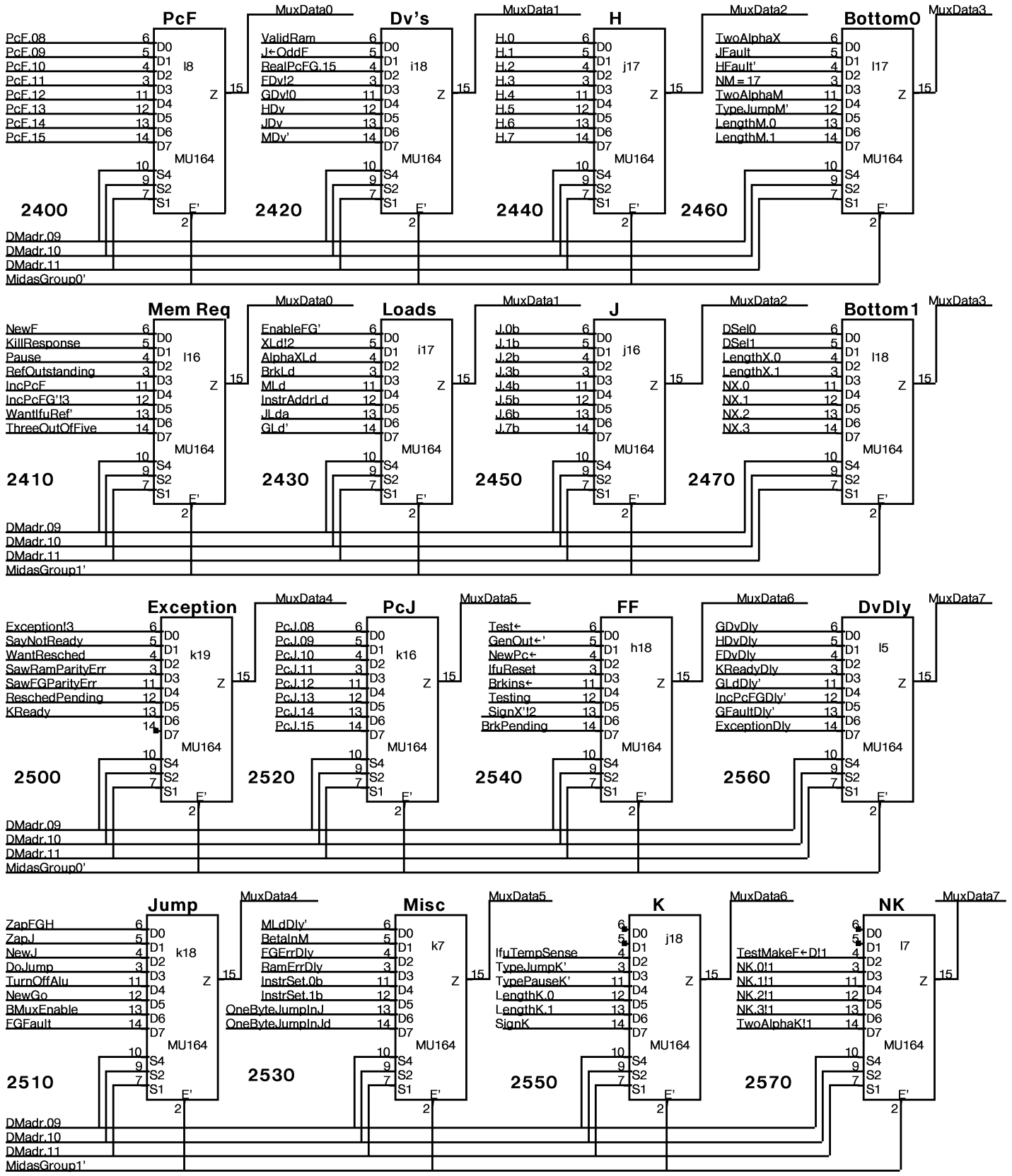

Word0:	**MemRQ**	**Word4:**	**JmpExc**
Word1:	**Loads**	**Word5:**	**PcJ**
Word2:	**HJ**	**Word6:**	**FFK**
Word3:	**MX**	**Word7:**	**DvNK**

XEROX PARC	Project		File	Designer	Rev	Date	Page
	Dorado	DMUX MUFFLERS	ifu17.sil	S. Ornstein	Cg	8/23/79	17

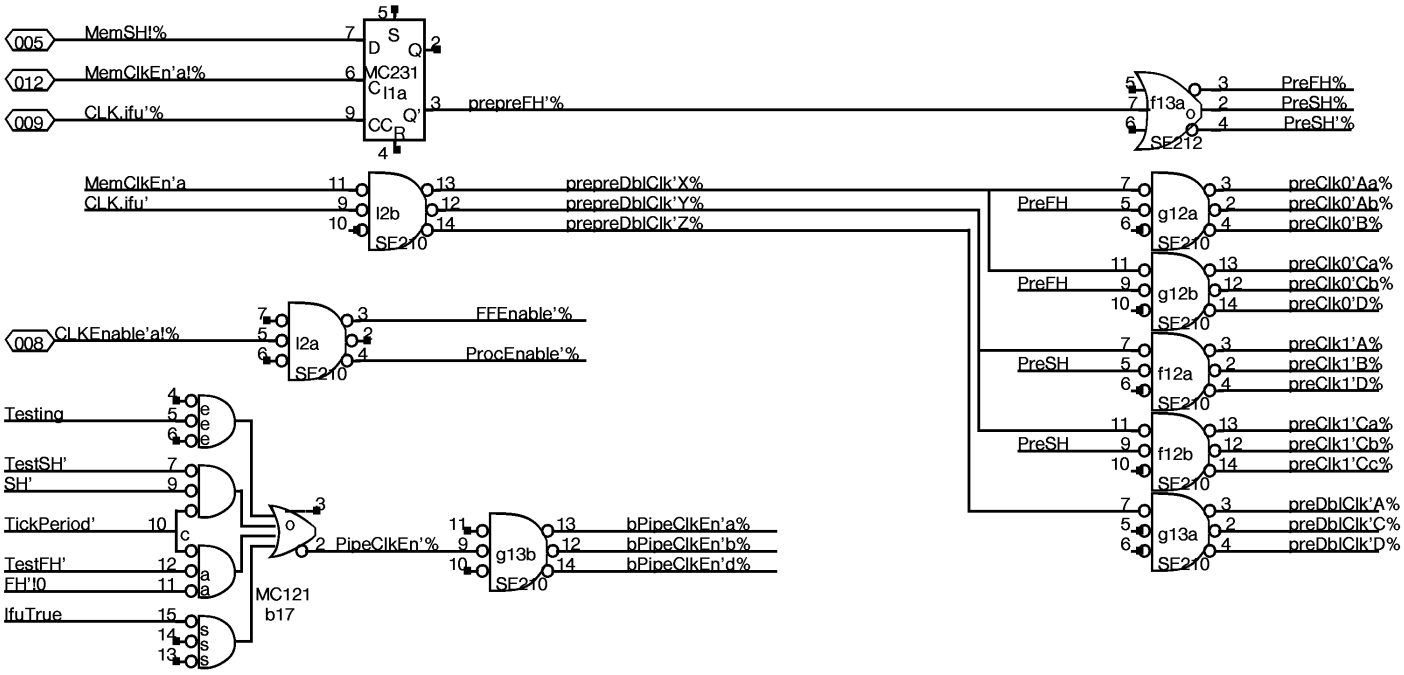

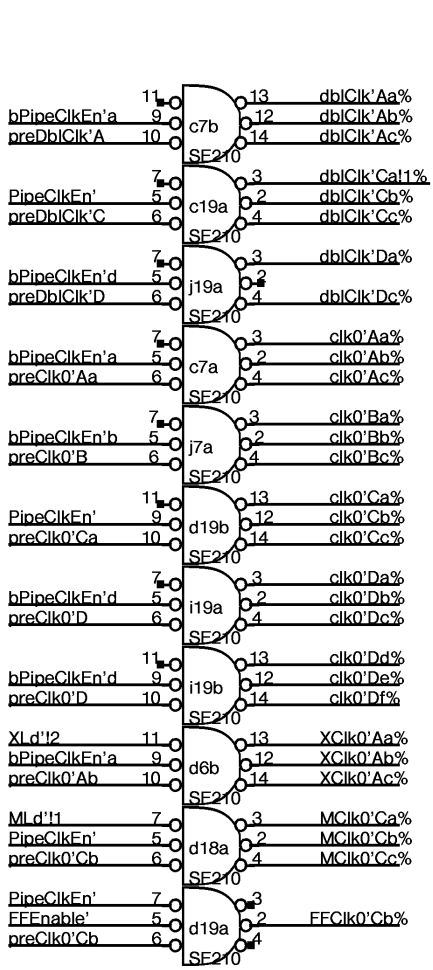

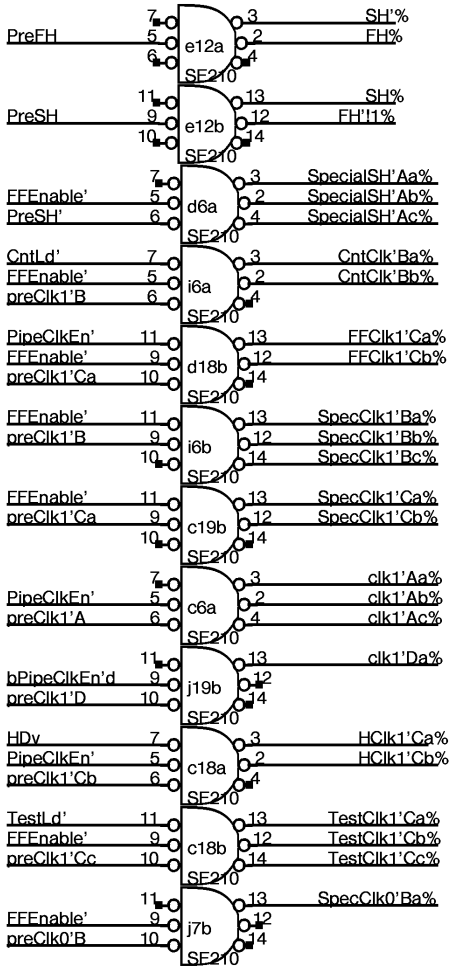

XEROX PARC	Project		File	Designer	Rev	Date	Page
	Dorado	IFU Clock Control	ifu18.sil	S. Ornstein	Cg	8/23/79	18

	MAR 0,8,1,9,2,10	BMux 0,8,1,9	MAR 3,11,4,12,5,13	BMux 2,10,3,11,4,12	IfuData BMux 5,13,6,14	BMux 7,15
	GenIn (28-57)			GenOut (60-89)		
01	A MAR 00 b MAR 08 c MAR 01 d MAR 09 101	b BMux 00 SS c BMux 08 d BMux 01 e BMux 09 173	b BMux 02 SS c BMux 10 d BMux 03 e BMux 11 173	b RcvdBMux 02 c RcvdBMux 10 d RcvdBMux 03 e RcvdBMux 11 f RcvdBMux 04 h RcvdBMux 12 195	b BMux 04 SS c BMux 12 d BMux 05 e BMux 13 173	b BMux 06 SS c BMux 14 d BMux 07 e BMux 15 173
02	b dBMux 00 c dBMux 08 174	a RcvdBMux 00 B FullAlpha c IfuTrue 105	b RcvdBMux 08 c RcvdBMux 01 d RcvdBMux 09 e PcFCarry f PcFCarry h PcFCarry 195	A MAR 04 b MAR 12 c MAR 05 d MAR 13 101	b dBMux 05 c dBMux 13 174	A MAR 06 b MAR 14 c MAR 07 d MAR 15 101
03	b dBMux 01 c dBMux 09 174	b dBMux 02 c dBMux 10 174	A MAR 02 b MAR 10 c MAR 03 d MAR 11 101	b dBMux 03 c dBMux 11 174	b dBMux 04 c dBMux 12 174	b PcF 12 C1 c PcF 13 d PcF 14 e PcF 15 F16
04	b C1 c PcF 01 d PcF 02 e PcF 03 F16	b PcX 00 X0 c PcX 08 d PcX 01 e PcX 09 f LengthX = 3' g 176	b PcF 04 C1 c PcF 05 d PcF 06 e PcF 07 F16	b PcF 08 C1 c PcF 09 d PcF 10 e PcF 11 F16	b PcX 02 X0 c PcX 10 d PcX 03 e PcX 11 f PcX 04 g PcX 12 176	b PcX 07 X0 c PcX 15 d PcX 06 e PcX 14 f PcX 05 g PcX 13 176
05	b C0 c NextData 0 d NextData 1 e NextData 2 F16	C0 DSel0 141	A EnEventCntB b SignIfuData c AlphaX' 106	b IfuData 7 c IfuData 6 174	b IfuData 5 c IfuData 4 174	b IfuData 3 c IfuData 2 d IfuData 1 e IfuData 0 158
06	DSelProm 139	C0 DSel1 141	a clk1' A b 210	a SpecSH A b XClk0 A 210	b AlphaX 07 C0 c AlphaX 06 d AlphaX 05 e AlphaX 04 F16	b AlphaX 03 C0 c AlphaX 02 d AlphaX 01 e AlphaX 00 F16
07	b IfuBMux 00 c IfuBMux 01 d IfuBMux 02 e IfuBMux 03 f IfuBMux 04 h IfuBMux 05 197	b IfuBMux 06 c IfuBMux 07 d IfuBMux 08 e IfuBMux 09 f IfuBMux 10 h IfuBMux 11 197	a clk0' A b dblclk A 210	a PcFG.15 b dSaw FGPE c 1672	b NX.0 X0 c NX.1 d NX.2 e NX.3 f LengthX.0 g LengthX.1 176	
08	b PcFG 00 C2 c PcFG 01 d PcFG 02 e PcFG 03 F16	b PcFG 04 C2 c PcFG 05 d PcFG 06 e PcFG 07 F16	b PcFG 08 C2 c PcFG 09 d PcFG 10 e PcFG 11 F16	b PcFG 12 C2 c PcFG 13 d PcFG 14 e PcFG 15 F16	b IfuBMux 12 c IfuBMux 13 d IfuBMux 14 e IfuBMux 15 f h 197	
09		b ALU 00 c ALU 01 d ALU 02 e ALU 03 181	b ALU 04 c ALU 05 d ALU 06 e ALU 07 181		b ALU 08 c ALU 09 d ALU 10 e ALU 11 181	b ALU 12 c ALU 13 d ALU 14 e ALU 15 181
10						
11	b PcJ 00 C0 c PcJ 01 d PcJ 02 e PcJ 03 F16	b PcJ 04 C0 c PcJ 05 d PcJ 06 e PcJ 07 F16	b PcJ 08 C0 c PcJ 09 d PcJ 10 e PcJ 11 F16	b PcJ 12 C0 c PcJ 13 d PcJ 14 e PcJ 15 F16	b dALU 08 c dALU 09 d dALU 10 e dALU 11 158	b dALU 12 c dALU 13 d dALU 14 e dALU 15 158
12	a PcJCarry b PcJCarry 1660	a PcFGCarry b PcFGCarry 1660		a dIncPcFG b PcFGCarry c PcJCarry d PcJLd 1664	a FH b SH 210	a preClk1 b preClk1 210
	A	B	C	D	E	F

XEROX PARC	Project	reference	File	Designer	Rev	Date	Page
	Dorado	Upper Left Quadrant	ifu19.sil	S. Ornstein	Cg	8/08/80	19

x RunRfsh
x CLK.ifu
x ClkEnable
x StartCycle

	102	84	68	52	36	20
01	b RcvdBMux 05 c RcvdBMux 13 d RcvdBMux 06 e RcvdBMux 14 f RcvdBMux 07 h RcvdBMux 15 195	A GenOut.11 b GenOut.10 c GenOut.09 d GenOut.08 125	A GenOut.07 b GenOut.06 c GenOut.05 d GenOut.04 125	A Genin.03 b Genin.02 c Genin.01 d Genin.00 124	A Genin.11 b Genin.10 c Genin.09 d Genin.08 124	A prepreFH'a b See Pg. 2 231
02	b dBMux 06 c dBMux 14 174	A GenOut.15 b GenOut.14 c GenOut.13 d GenOut.12 125	A GenOut.03 b GenOut.02 c GenOut.01 d GenOut.00 125	A Genin.07 b Genin.06 c Genin.05 d Genin.04 124	A Genin.150 b Genin.14 c Genin.13 d Genin.12 124	a ClkEnable b prepreDblClk 210
03	b dBMux 07 c dBMux 15 174	*Spec 1* **EventCntB** **F16**	*Spec 1* **EventCntB** **F16**	a b BCntCarry c BCntCarry d BCntCarry 1664	*Spec 1* **EventCntA** **F16**	*Spec 1* **EventCntA** **F16**
04	*CntClk* BCntMuxCntrl 176	*Spec 1* **EventCntB** **F16**	*Spec 1* **EventCntB** **F16**	a ACntCarry b ACntCarry c ACntCarry d 1664	a b dTWReq01 212	*Spec 1* **EventCntA** **F16**
05	*CntClk* ACntMuxCntrl 176	BCntMux 164	ACntMux 164	a b dCntA c dCntB d dCntB 1662	*Spec 1* **EventCntA** **F16**	**DvDly** **MU164**
06	Temp Sensor		a CntClk B b SpecClk1 B 210	A IfuReset b NewGo *SpecClk0* 231	b bEmuOrFT c Hold d ProcMemRef e IfuMemRef f GoodIfuJmp g EventAx *Spec 1* 176	b EventBx c EventCx d EventDx e EventEx f Miss g NotRdyJmp *Spec 1* 176
07	*c0* Events 176	*c0* Events 176		a clk0 B b SpecClk0 B 210	**Misc** **MU164**	**NK** **MU164**
08	a EventCntB b EventCntB c EventCntB D EventCntB 104	a BCntMuxEnb b bIfuHold' c ACntMuxEnb D bEmuOrFT 102		*SpecClk0* A SyncedTTW b TWReq01 231	A TimeToWake b del TTW *Pendulum* 231	**PcF** **MU164**
09	TwoAlphaK 415	SignK 415	NK.0 415	NK.1 415	NK.2 415	NK.3 415
10	TypePauseK 415	Parity2 415	MEMBK.0 415	IfuAddr 3 415	MemBK.1 415	IfuAddr 0 415
11	TypeJumpK 415	b J0a c J1a d J2a e J3a *c0* F16	b J0b c J1b d J2b e J3b *c0* F16	b J0c c J1c d J2c e J3c *c0* F16	b J0d c J1d d J2d e J3d *c0* F16	IfuAddr 1 415
12	a preClk0 b preClk0 210	b J4a c J5a d J6a e J7a *c0* F16	b J4b c J5b d J6b e J7b *c0* F16	b J4c c J5c d J6c e J7c *c0* F16	b J4d c J5d d J6d e J7d *c0* F16	Parity0 415
	G	H	I	J	K	L

XEROX PARC	Project	reference	File	Designer	Rev	Date	Page
	Dorado	UPPER RIGHT Quadrant	ifu20.sil	S. Ornstein	Cg	8/08/80	20

13	b H 0 *HC1* c H 1 d H 2 e H 3 f H 4 g H 5 176	b H.6 *HC1* c H.7 d HFault e f g 176	b PcM 00 *MC0* c PcM 01 d PcM 02 e PcM 03 f PcM 04 g PcM 05 176	b AlphaM 0 *MC0* c AlphaM 1 d AlphaM 2 e AlphaM 3 f AlphaM 4 g AlphaM 5 176	b AlphaM 6 *MC0* c AlphaM 7 d PcM 12 e PcM 13 f PcM 14 g PcM 15 176	a preFH b TurnOffAlu 212
14	b EnableH 0 c EnableH 1 d EnableH 2 e EnableH 3 f EnableH 4 h EnableH 5 197	a EnableH 6 b EnableH 7 c dSignX D dTwoAlphaX 104	b PcM 06 *MC0* c PcM 07 d PcM 08 e PcM 09 f PcM 10 g PcM 11 176	b LengthM.0 *MC0* c LengthM.1 d SpareM.0 e SpareM.1 f dNM = 17a g dNM = 17b 176	FGParityErr 170	b InstrSet 0a c InstrSet 0b d InstrSet 1a e InstrSet 1b *FFc1* F16
15	b Brkins 0 *c2* c Brkins 1 d Brkins 2 e Brkins 3 F16	b Brkins 4 *c2* c Brkins 5 d Brkins 6 e Brkins 7 F16	b SignM *MC0* c TwoAlphaM d NM 0 e NM 1 f NM 2 g NM 3 176	a NM = 17 b NK2&NK3 c NK0&NK1 D IfuMemAck 104	a dHJ4 b dHJ5 c dHJ6 d dHJ7 1664	a InstrSetLd b CntLd C d TestOrReset 103
16	b TestReg 0 *Test1* c TestReg 1 d TestReg 2 e TestReg 3 f TestReg 4 g TestReg 5 176	b TestReg 6 *Test1* c TestReg 7 d e TestFH f TestSH g Testing 176	b MemBM 0 *MC0* c MemBM 1 d LengthM = 3 e MDv f TypeJumpM g LengthM = 3 176	A BrkPending *c2* b 231	a dHJ0 b dHJ1 c dHJ2 d dHJ3 1664	IncPcFG 119
17	b TestIfuAck *Test1* c TestMemAck d TestMakeF←D e TestFault f g 176	PipeClkEn 121	A SawFGPe *c2* b *(delayed clock)* 231	b AlphaXLd c XShift 117	A Pause *c0* b IncPcF 231	a dPause b PcFGLd c bIfuHold d dAckJunkTW 1664
18	b NewPc1 c AckJnkTW d DecLo← e DecHi← f g Brkins← *FF1* 176	b c GenOut← d InstrSetOrJunk← e IfuReset1 f g *Spec1* 176	a HClk1' C b TestClk1' C 210	a MClk0' C b FFClk1' C 210	a XLd b KReady 1660	InstrAddrLd 121
19	a BMuxEnable B NextBeta 109	a dNewGo B EnBMuuxOut c TestLd 105	a dblClk' C b SpecClk1' C 210	a FFClk0' C b Clk0' C 210	a PcFG15 b KReady c Kready d dBrkLd 1662	a JKillResponse b FGDv 212
20	b SignX *AXC0* c TwoAlphaX d BetaInM e F16	b bIfuFault *c0* c NewF d NewF' e MLdDly f DoJump g DoJump' 176	b Test← *Spec1* c dTickPeriod d RamErrDly e FGErrDly f WantIfuHoldDly g 176	b ExtendH c sIncPcF 117	a B dSawFGPe c InstrAddrLd 105	A HDv *c2* b FDv 135
21	A TickPeriod b ShutUp (junk) *Spec1* 231	b c WantIfuHold 117	b InstrSetOrJunk← c ReschedPending d SayRamParityErr e DecLo← f DecHi← h TestMemAck' *inv* 195	b dJDv c ZapJ 117	b BrkLd c SayNotReady 117	A NewJ b RefOutstanding *c0* 135
22	A FF130 b FF131 c FF132 d FF133 100	a dReschedPending b dReschedPending 1660	b ReschedPending c NewPc← *ff0* d WantResched e KReadyDly f GDvDly g IncPcFGDly 176	a SayResched b SayFGParityErr C BetaInM' d IfuNextData 103	a BetaInH B J FDv c NewGoOrNoM 105	a dSayNotReady b K NewJ c dGDv d K FDv 1664
23	A FF134 b FF135 c FF136 d FF137 100	A FF100 b FF101 c FF102 d dReschedPending 100	FC 161	b GenOut← c DMuxEnable d AckJnkTW' e DMuxEnable f ReschedPending' h SayNotReady 195 *inv*	a ZapFGH B JHDv c SeeJump 105	a EnableFG' b J←H 1660
24	FB 161	a FF5 b FF6 c FF7 d EmuOrFT' 1664	a FA = 1 b SayStuff 210	a J←OddF b SayNotReady1 1660	a EnableFG' b DMuxEnable C dMiss d 1ByteJumpInJ 103	b *c2* c d e specialPcFG15 F16

A 10 B 26 C 42 D 58 E 74 F 92

MemB
x EmuOrFT'

x NextData
x WantIfuHold
xASEL0

FF

FG

XEROX PARC	Project	reference	File	Designer	Rev	Date	Page
	Dorado	Lower Left Quadrent	ifu21.sil	S. Ornstein	Cg	12/21/79	21

13	a preDblClk b PipeClkEn 211	A SawRamParityErr b c0 231	RamParityErr 2 170	RamParityErr 0 170	RamParityErr 1 170	Parity1 415
14	RBaseSel 415	MemB 34 415	IfuAddr 2 415	IfuAddr 4 415	IfuAddr 6 415	IfuAddr 8 415
15	LengthK.0' 415	a HDv b HDv c KReady d dGLd 1662	LengthK.1' 415	IfuAddr 5 415	IfuAddr 7 415	IfuAddr 9 415
16	a MightBeJump B WantIfuRef c IfuMakeF←D 105	a d HDv b ZapOrJEmpty c dJDv D dSawFGPE 102	A ExceptionDispatch b 231	**J** MU164	**PcJ** MU164	**Top** MU164
17	a dPause b c RealJFault D dWantResched 102	b JDv' c JDv d JFault e JFault' c0 F16	**Loads** MU164	**H** MU164	b HDvDly c0 c FDvDly d GLdDly' e GFaultDly' f ExceptionDly' g 176	**Bottom** MU164
18	a LengthK.0 b LengthK.1 1660	**FF's** MU164	**Dv's** MU164	**K** MU164	**Jumps** MU164	**Bottom** MU164
19	b GDv'a c2 c GDv' d GFault e GDv F16	OtherHole 121	a clk0' D b clk0' D 210	a dblclk' D b clk1' D 210	**Exception** MU164	DMadr1-5 176
20	dGDv 121	WantIfuRef2 121	A 1ByteJumpInJ b 1ByteJumpInJd c0 135	A Mar←PcF c1 b FFault 231	a WantIfuRef1 b WantIfuRef1 c WantIfuRef1 D 102	a K KillResponse b IfuAddr 6 C K RefOutstanding d IfuAddr 7 103
21	a WantIfuRef1 b WantIfuRef2 c WantIfuRef3 d WantIfuRef' 1662	dGDv 119	b FGFault c FGFault 117	a K HDv b K HDv c K HDv D Exception 102	A IfuAddr 4 b IfuAddr 9 c IfuAddr 53 d IfuAddr 12 101	A KillResponse c2 b 135
22	GLd 119	A dGLd1 b dGLd2 c Exception 106	a RealHFault b Exception' c IfuAddr 8 d IfuAddr 9 1662	a ValidRam B Exception 1660	A IfuAddr 4 c0 b IfuAddr 9 c0 231	DMadr6-11 176
23	JLdb 121	a bMLd b dMiss c dAckJunkTW d 1662	b SayNotReady c dMiss 118	A IfuAddr 5 b IfuAddr 8 c IfuAddr 10 d IfuAddr 11 101	A IfuAddr 3 c0 b IfuAddr 8 c0 231	A MidasGroup b DMuxClk c d IfuTrueb 101
24	MLd 121	JLda 121	A IfuAddr 1 c0 b IfuAddr 6 c0 231	A IfuAddr 2 c0 b IfuAddr 7 c0 231	A IfuAddr 0 c0 b IfuAddr 5 c0 231	DMuxData MU164

92 **G** — FG0-6

110 **H** — IfuAddr0-9; 126 x IfuNextMacro; x WantIfuRef

142 **I**

158 **J**

174 **K**

L — MakeF←D, IfuAck, DMuxData, DMuxClock

XEROX PARC	Project	reference	File	Designer	Rev	Date	Page
	Dorado	Lower Right Layout	ifu22.sil	S. Ornstein	Cg	12/21/79	22

IF Data Selector PROM SG 139 (see Dwg. 02)

N	Two Alpha	JMP	Length	Address	Contents	Numeric Sequence	Effective Sequence
N		JMP	0	00	11111111	3, 3, 3, 3, 3	IL, IL, IL, IL, IL.....
			1	01	11111111		
			2	02	11111111		
			3	03	11111111		
			0	04	11111111		
			1	05	11110111	2, 3, 3, 3, 3	N, IL, IL, IL, IL.....
			2	06	10110011	2, 0, 3, 3, 3	N, Alpha, IL, IL, IL.....
			3	07	10010001	2, 0, 0, 3, 3	N, Alpha, Beta, IL, IL.....
	Two Alpha	JMP	0	10	11111111	3, 3, 3, 3, 3	IL, IL, IL, IL, IL.....
			1	11	11111111		
			2	12	11111111		
			3	13	11111111		
			0	14	11111111		
			1	15	11111111		
			2	16	10010101	2, 1, 0, 3, 3	N, Alpha[0:3], Alpha[4:7] , IL, IL.....
			3	17	10000100	2, 1, 0, 0, 3	N, Alpha[0:3], Alpha[4:7] , Beta, IL.....
no N		JMP	0	20	11111111	3, 3, 3, 3, 3	IL, IL, IL, IL, IL.....
			1	21	11111111		
			2	22	11111111		
			3	23	11111111		
			0	24	11111111		
			1	25	11111111		
			2	26	01110111	0, 3, 3, 3, 3	Alpha, IL, IL, IL, IL.....
			3	27	00110011	0, 0, 3, 3, 3	Alpha, Beta, IL, IL, IL.....
	Two Alpha	JMP	0	30	11111111	3, 3, 3, 3, 3	IL, IL, IL, IL, IL.....
			1	31	11111111		
			2	32	11111111		
			3	33	11111111		
			0	34	11111111		
			1	35	11111111		
			2	36	00111011	1, 0, 3, 3, 3	Alpha[0:3], Alpha[4:7], IL, IL, IL.....
			3	37	00011001	1, 0, 0, 3, 3	Alpha[0:3], Alpha[4:7], Beta, IL, IL.....

No zero length instructions
No 3 - Byte Jumps
Jumps never export anything other than the length (no "N" on 2 - byte Jumps).
A one - byte instruction specifying Two Alpha is meaningless