Printer Dover

Spruce version 11.2 -- spooler version 11.2

File: MemD-Rev-Ca.sil etc.

Creation date: 30-Oct-79 14:11:21

For: Spruce

25 total sheets = 24 pages, 1 copy.

Problems encountered:
Font HELVETICA24B substituted for font HELVE24.

DORADO SCHEMATICS

Memory Data Board

(4K chip version)

Table of contents

TITLE	Page
Bit slice 00 and its control	01
D memory addresses	02
Control, D memory CE's and Write's	03
Hamming code generator	04
Hamming code checker	05
Error corrector and Pipe4	06
Bit slices 01	07
02-03	08
04-05	09
06-07	10
08-09	11
10-11	12
12-13	13
14-15	14
16-17	15
D memory addressing, bits 01-05	16
06-10	17
11-15	18
16-17	19
Bit slice control, bits 01-17	20
Midas control and multiplexors	21
Clock distribution	22
Layout	23

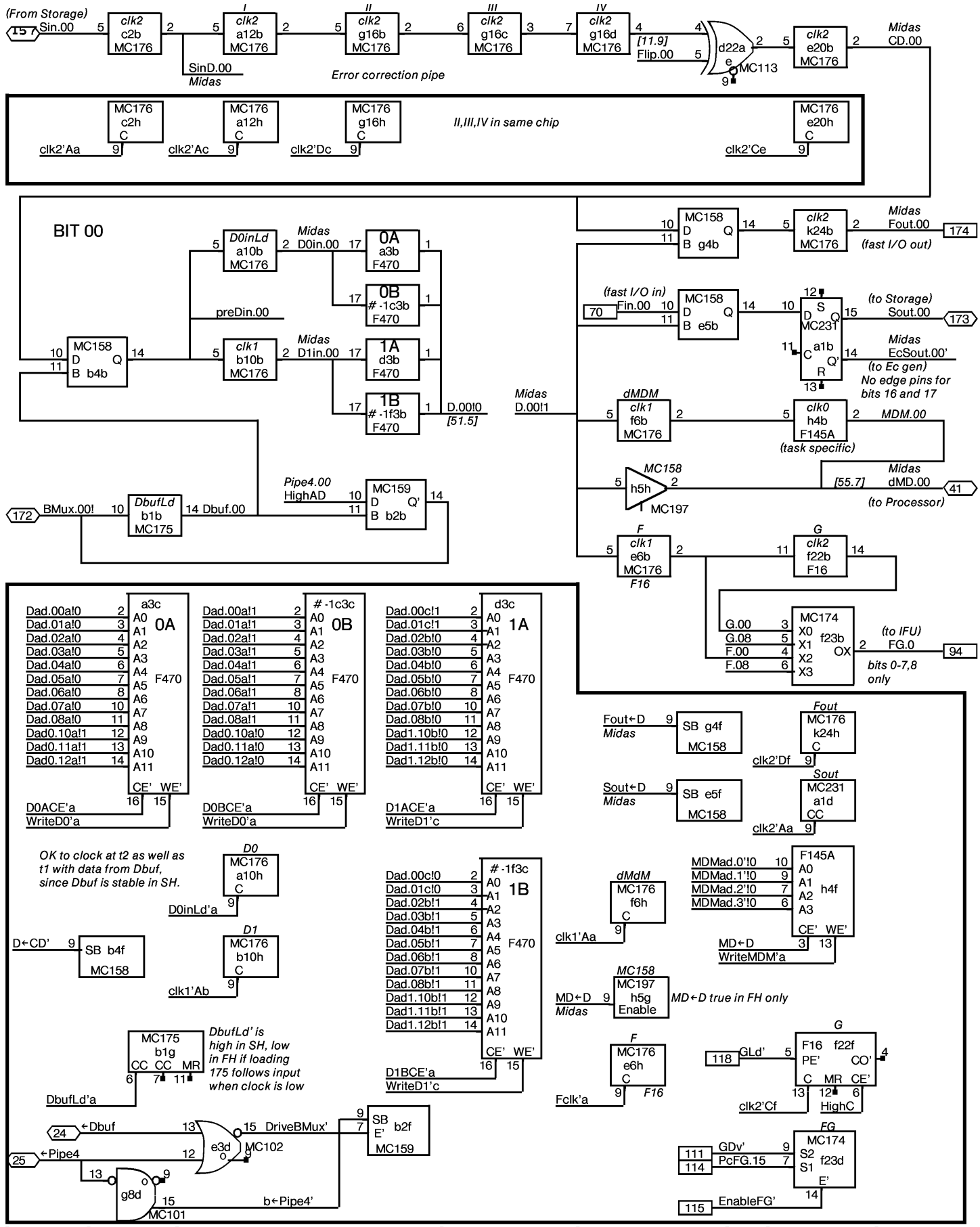

XEROX PARC/CSL	Project	Memory data board	File	Designer	Rev	Date	Page
	Dorado	Bit slice 00 + its control	MemD01.sil	D. Clark	Ca	7/11/79	01

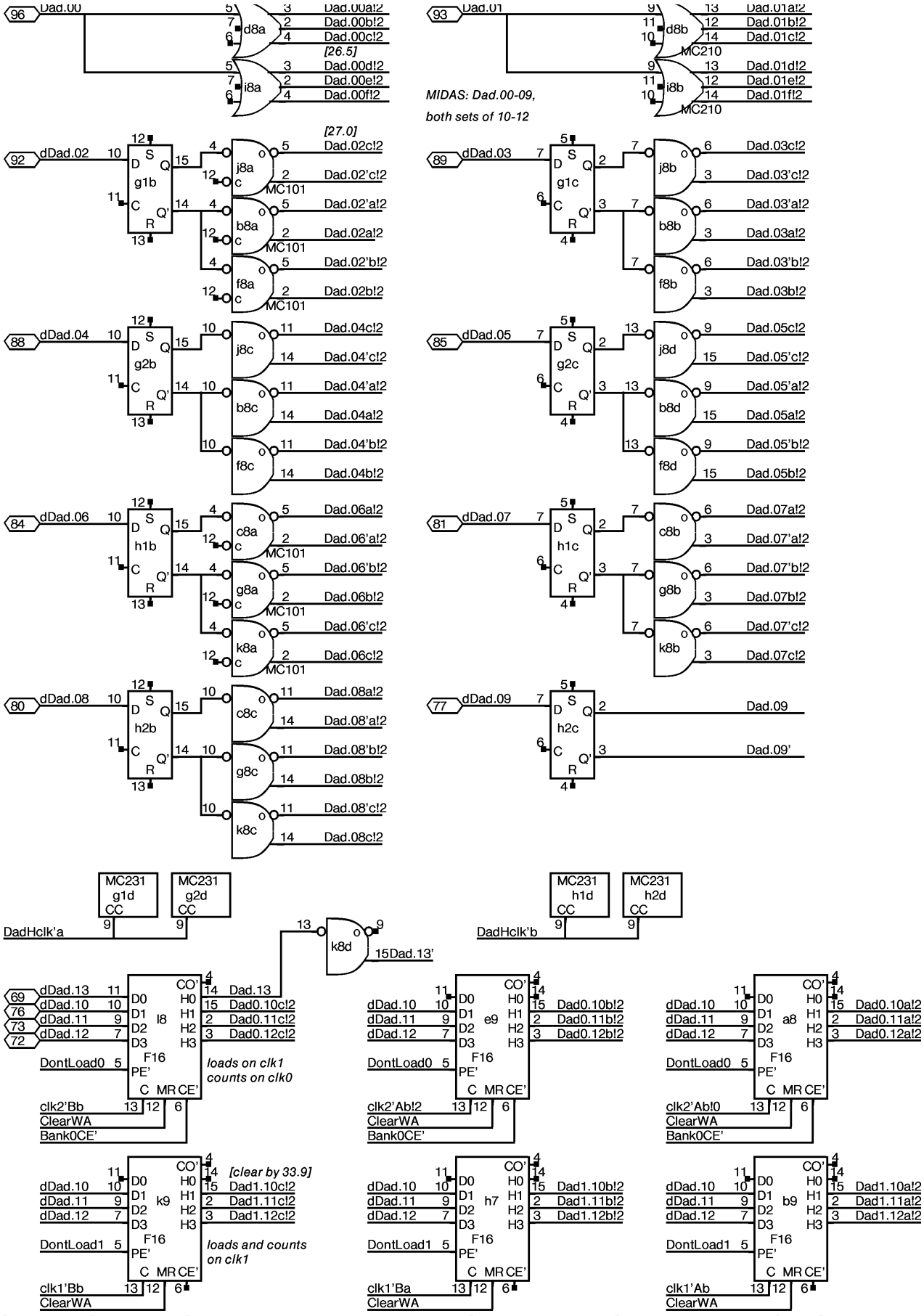

XEROX PARC/CSL	Project	Memory data board	File	Designer	Rev	Date	Page
	Dorado	D memory addresses	MemD02.sil	D. Clark	Ca	7/11/79	02

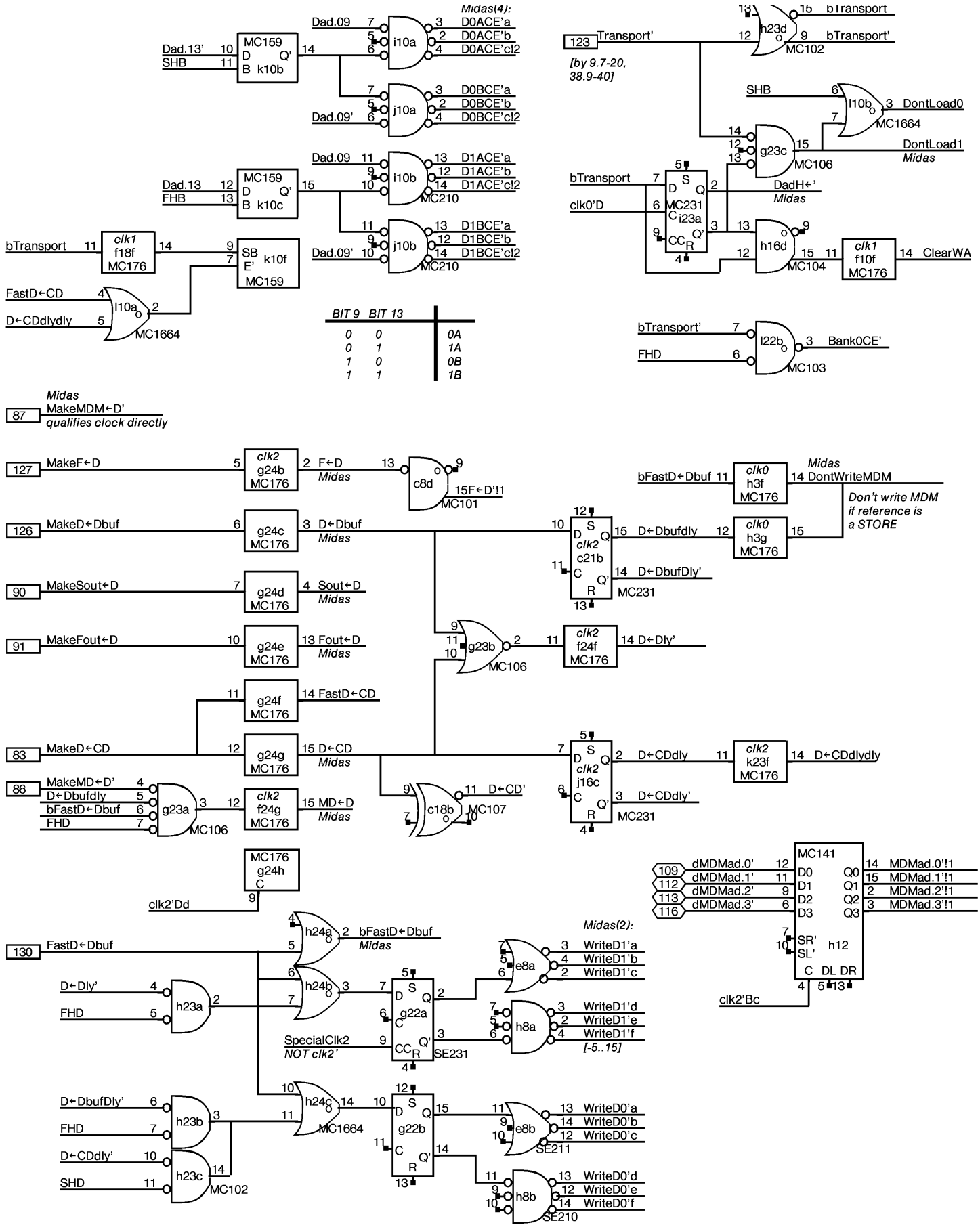

XEROX PARC/CSL	Project	Memory data board Control, WE's & CE's	File	Designer	Rev	Date	Page
	Dorado		MemD03.sil	D. Clark	Ca	7/31/79	03

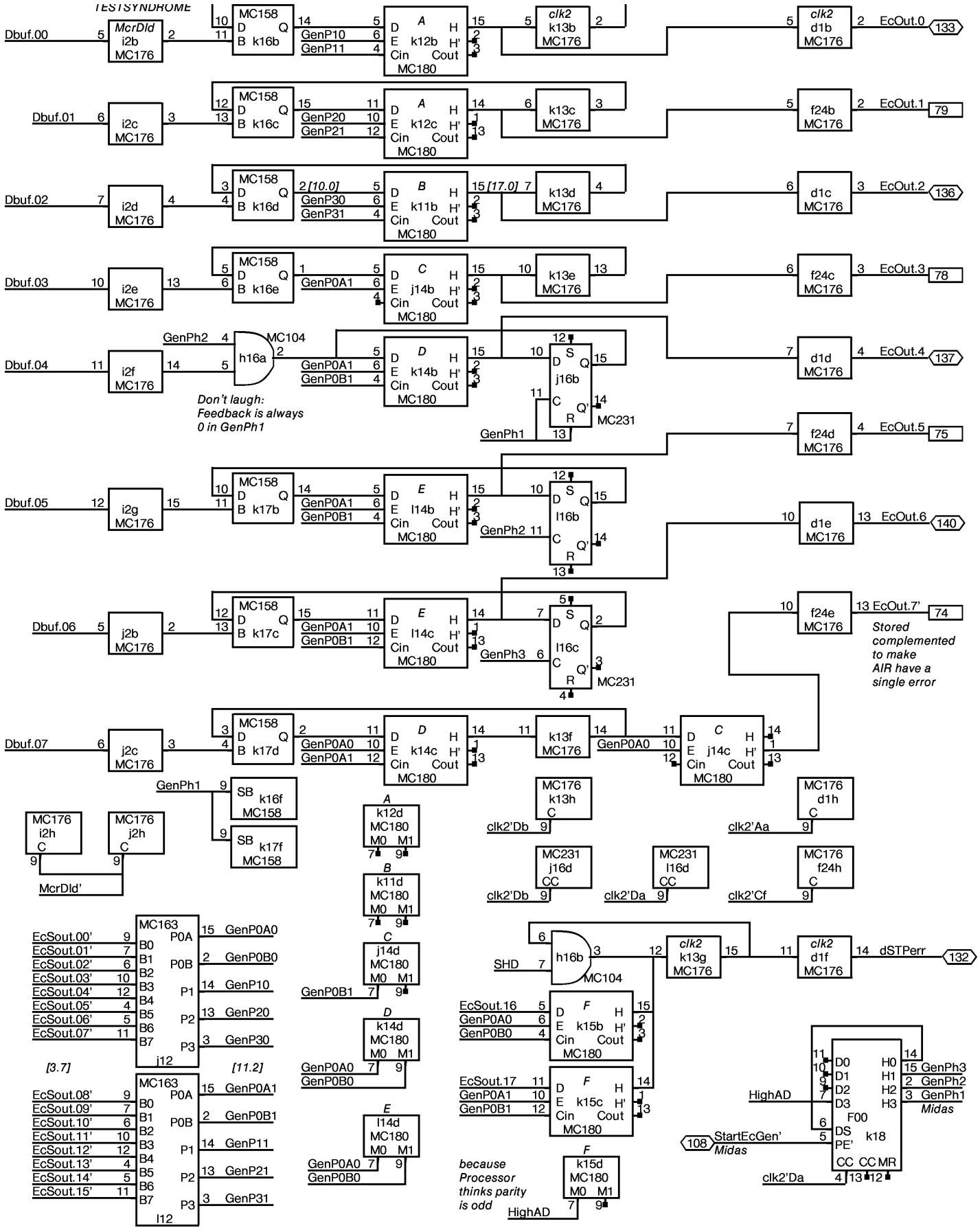

XEROX PARC/CSL	Project	Memory data board Hamming code generator	File	Designer	Rev	Date	Page
	Dorado		MemD04.sil	D. Clark	Ca	7/31/79	04

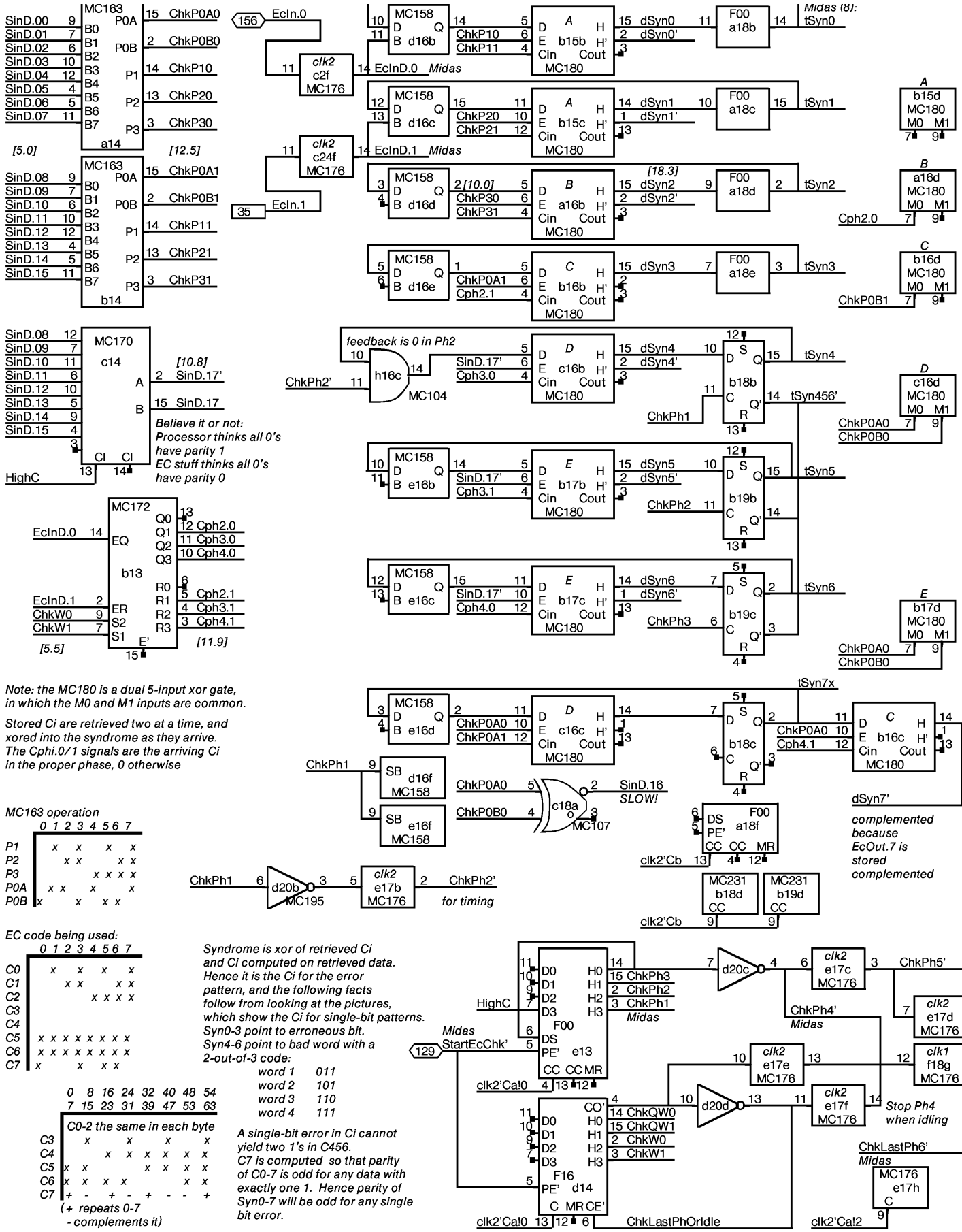

XEROX PARC/CSL	Project	Memory data board Hamming code checker	File	Designer	Rev	Date	Page
	Dorado		MemD05.sil	D. Clark	Ca	7/09/79	05

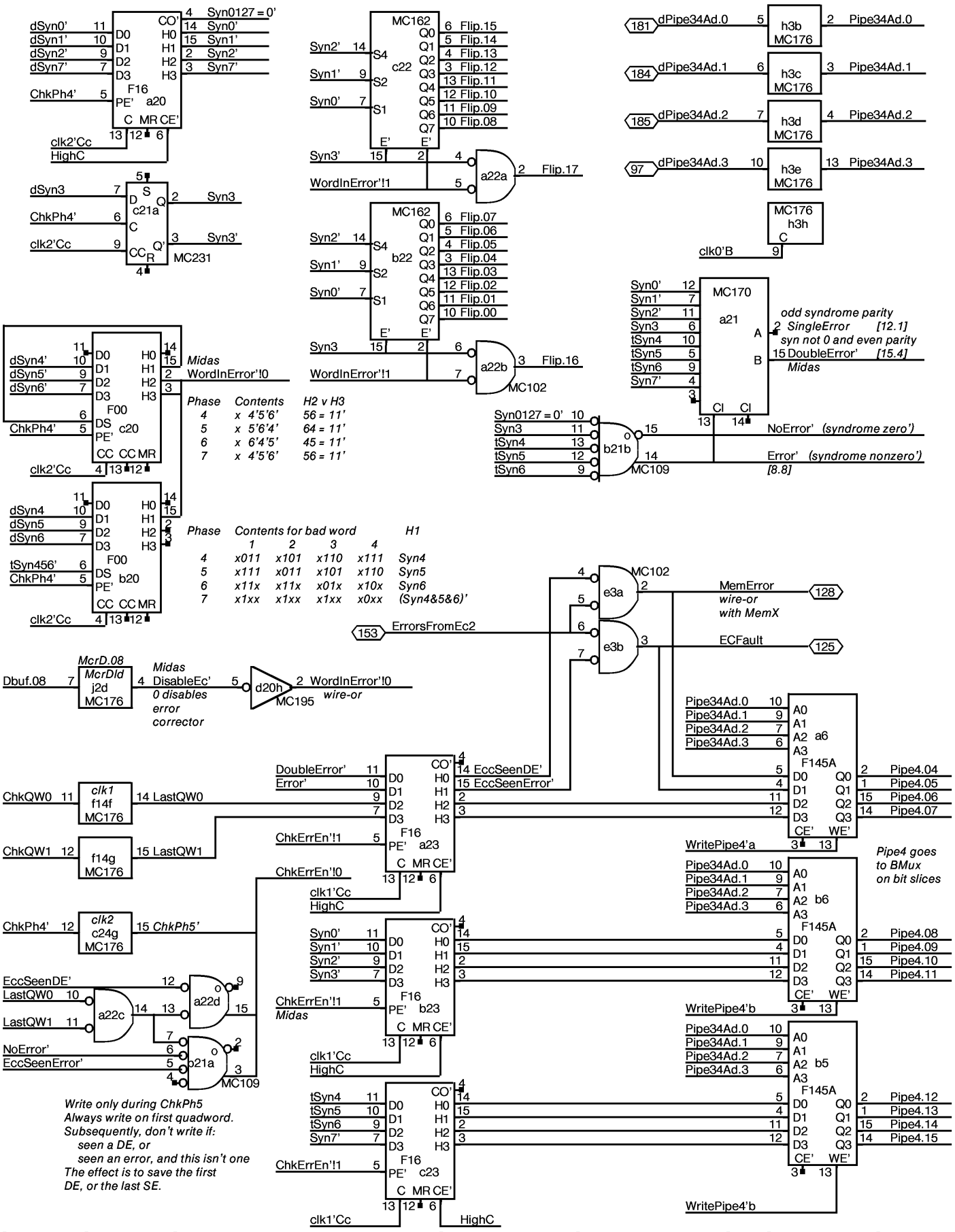

XEROX PARC/CSL	Project	Memory data board	File	Designer	Rev	Date	Page
	Dorado	Error corrector, Pipe4	MemD06.sil	D. Clark	Ca	7/09/79	06

Bit 00 is on page 2

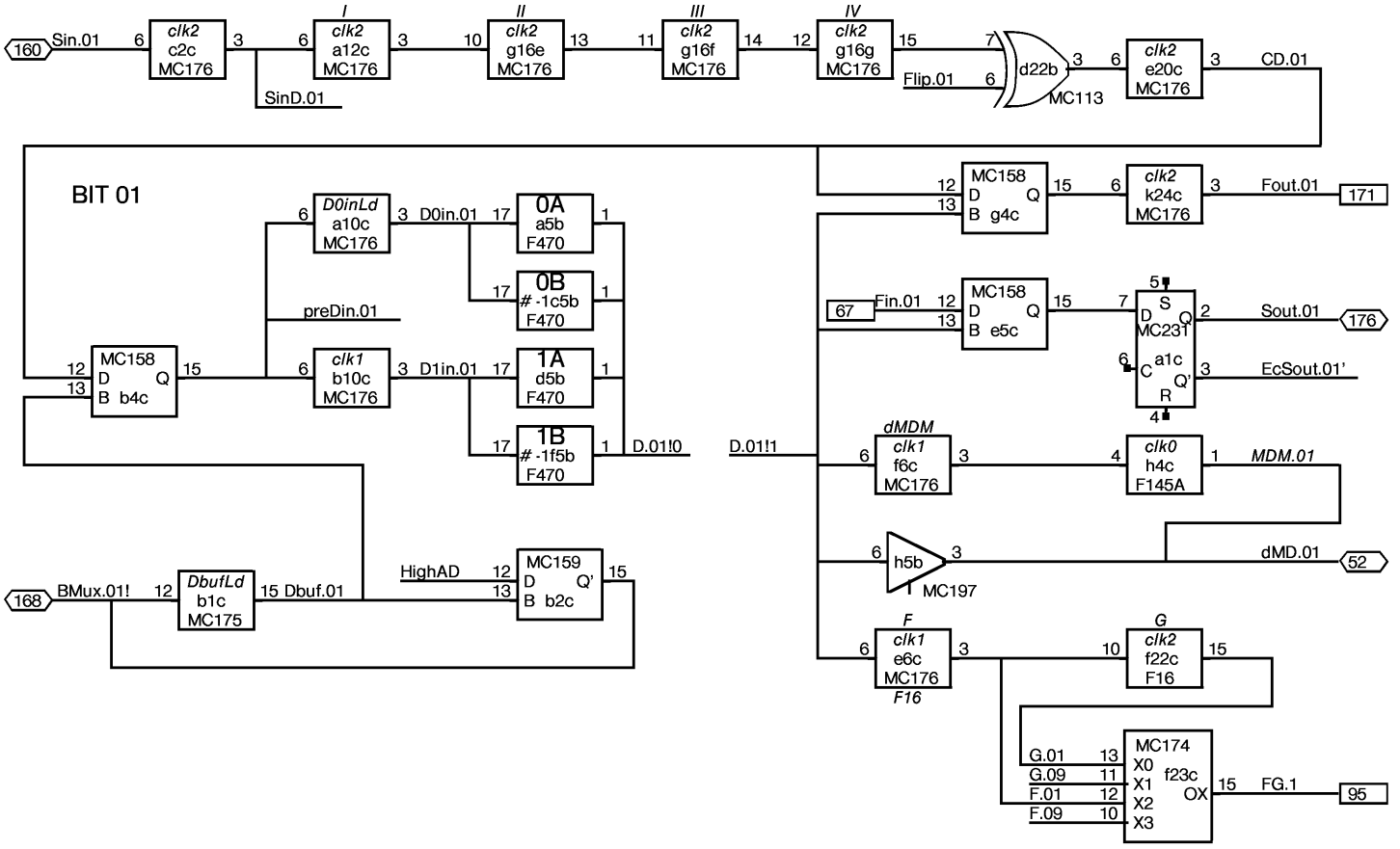

XEROX PARC/CSL	Project	Memory data board	File	Designer	Rev	Date	Page
	Dorado	Bit slice 01	MemD07.sil	D. Clark	Ca	7/11/79	07

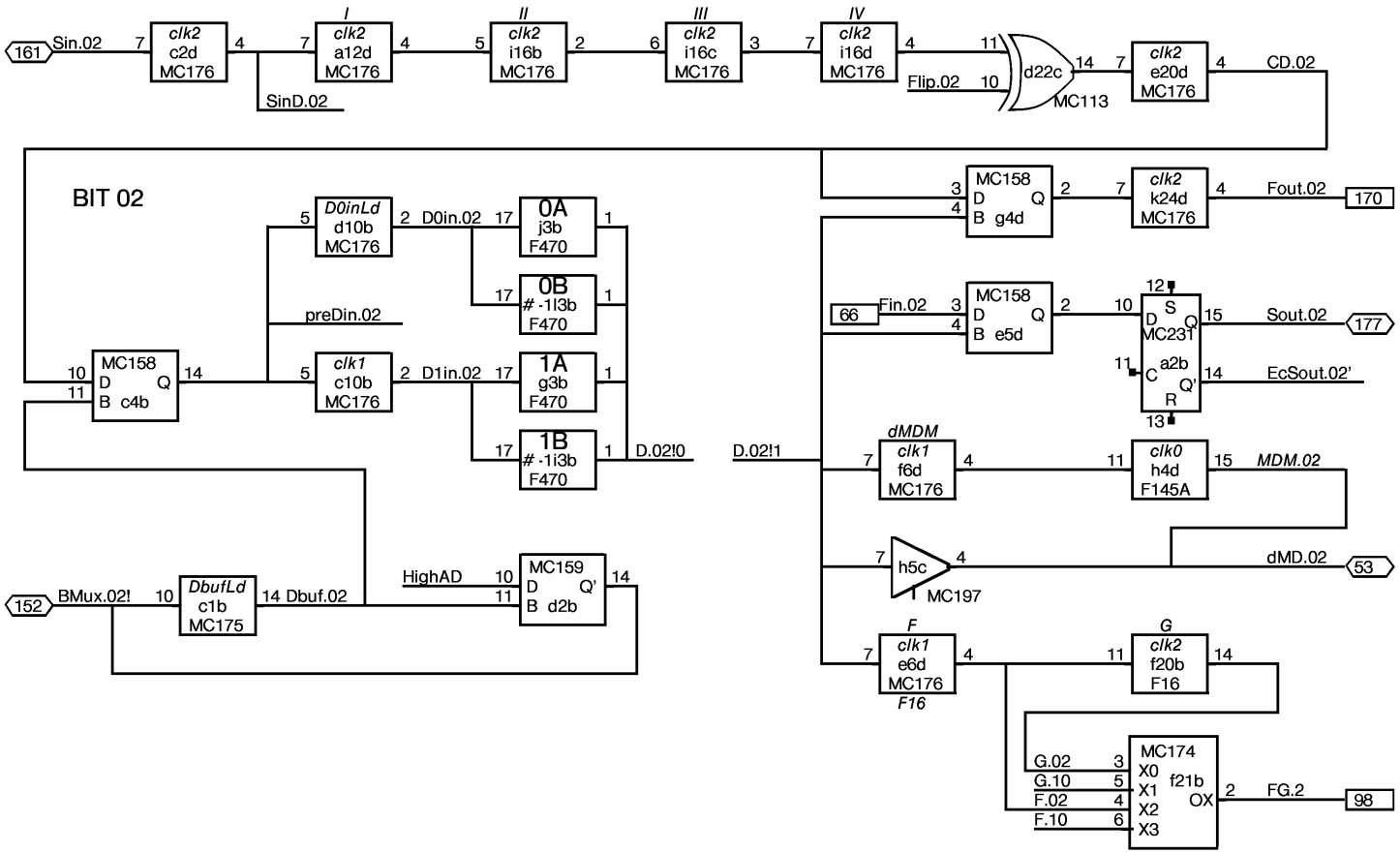

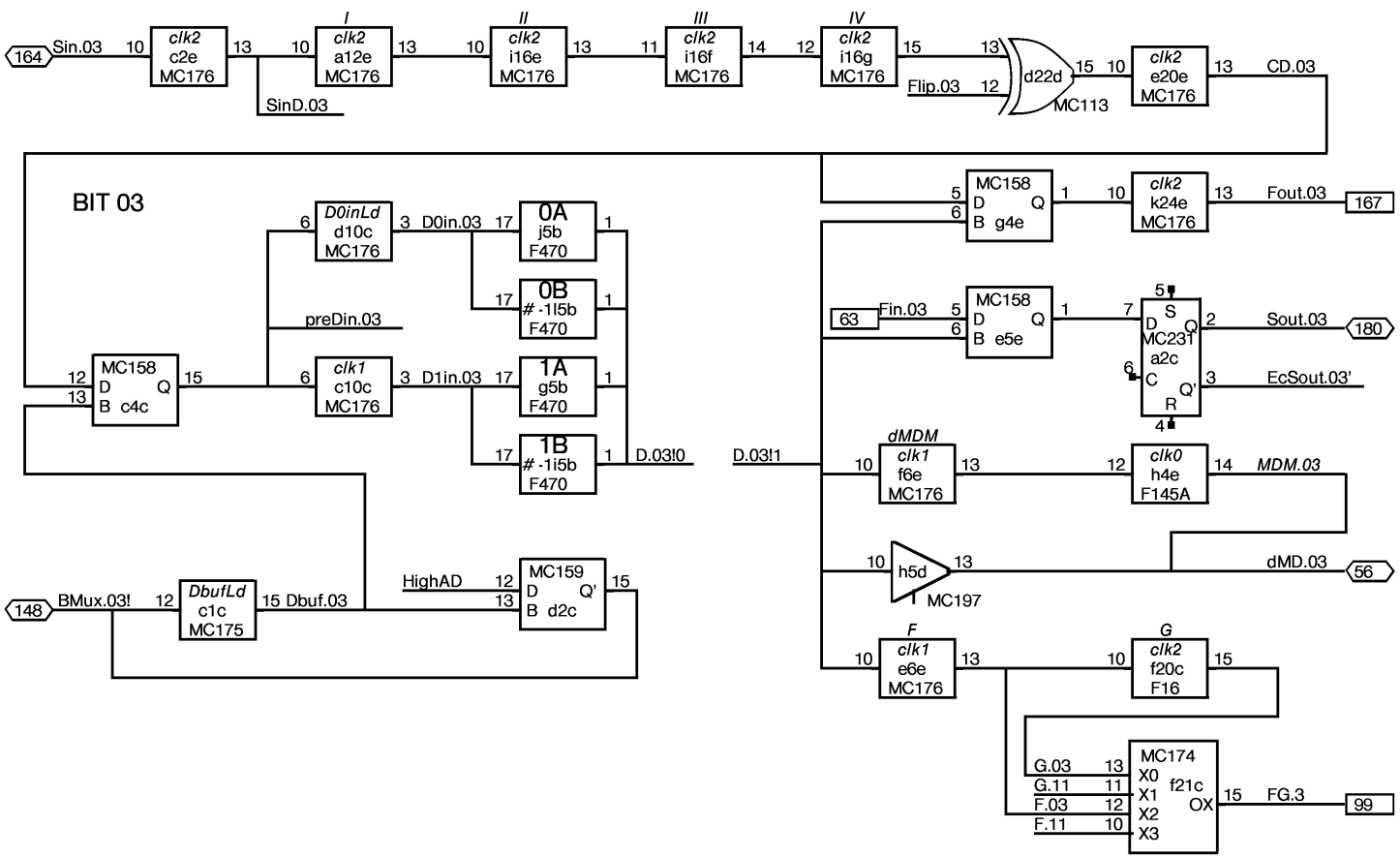

XEROX PARC/CSL	Project	Memory data board Bit slices 02-03	File	Designer	Rev	Date	Page
	Dorado		MemD08.sil	D. Clark	Ca	7/11/79	08

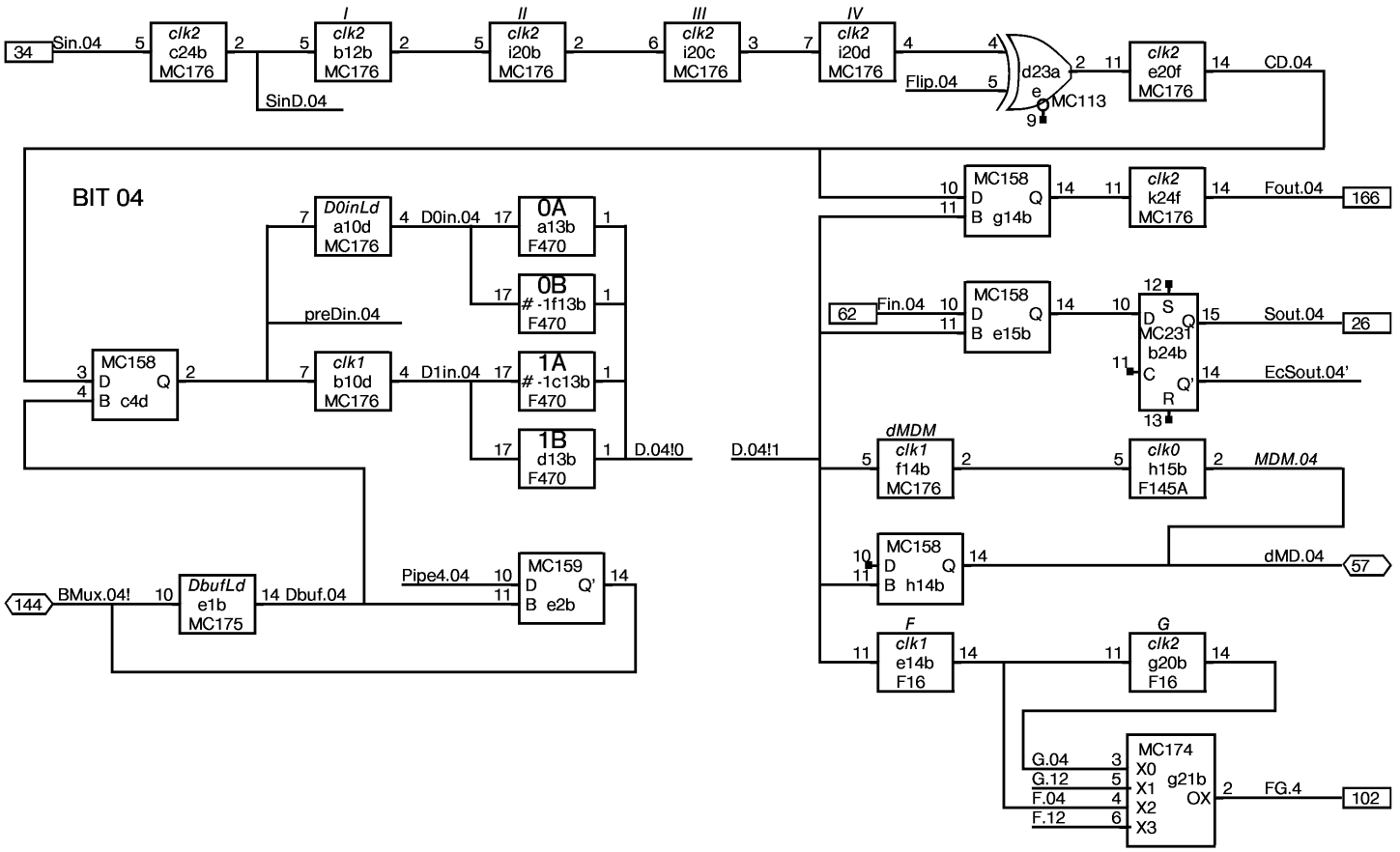

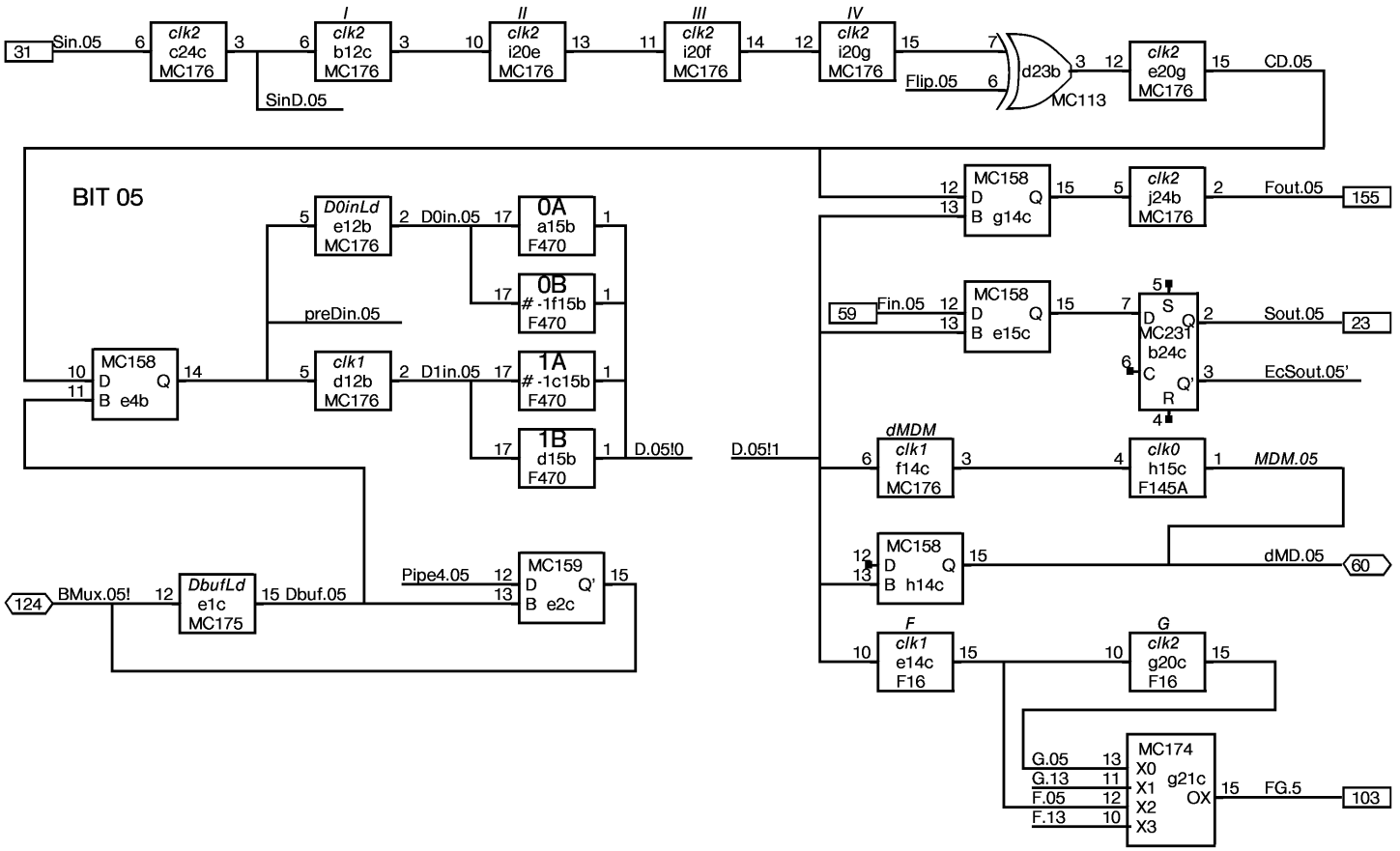

XEROX PARC/CSL	Project	Memory data board	File	Designer	Rev	Date	Page
	Dorado	Bit slices 04-05	MemD09.sil	D. Clark	Ca	7/11/79	09

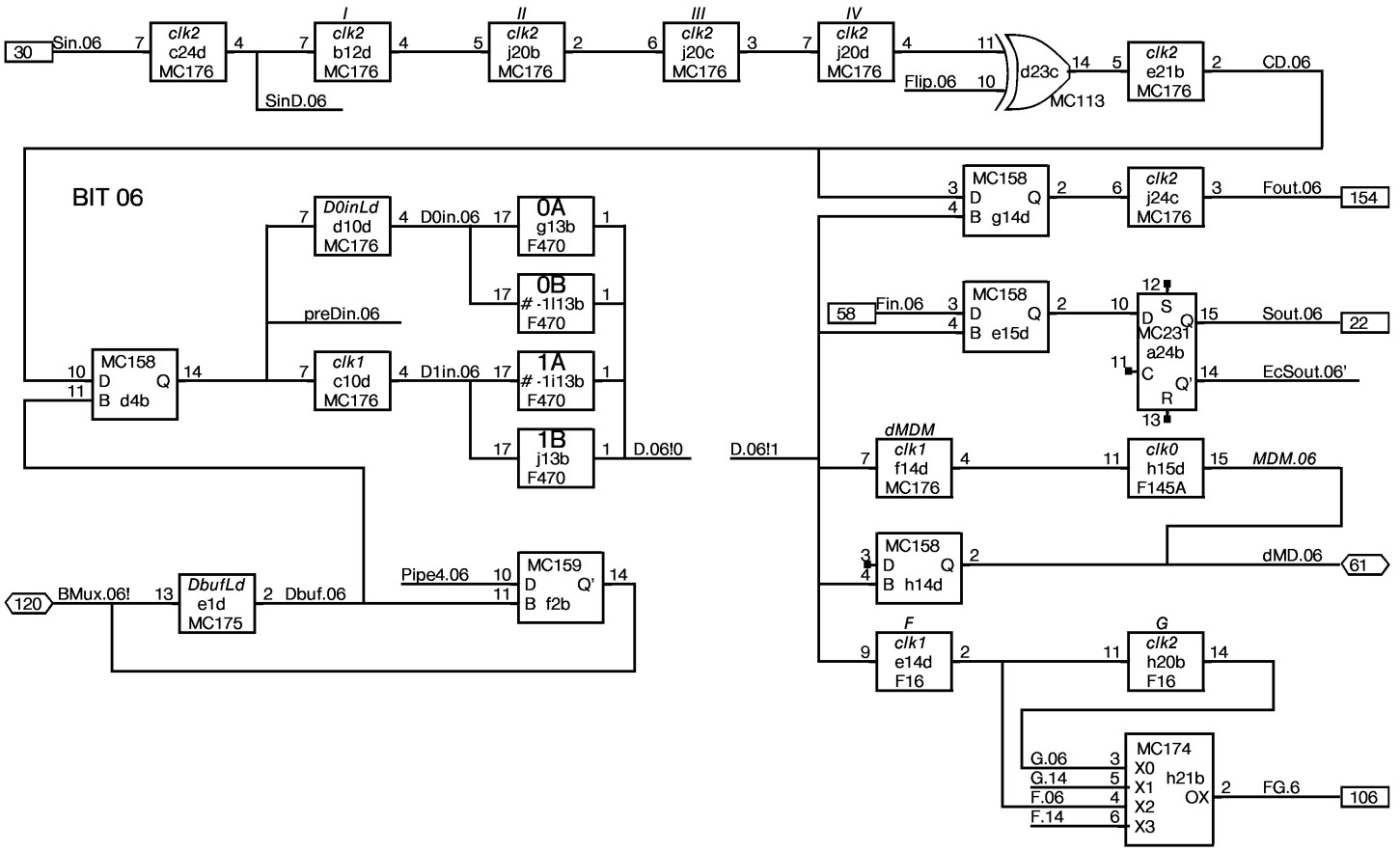

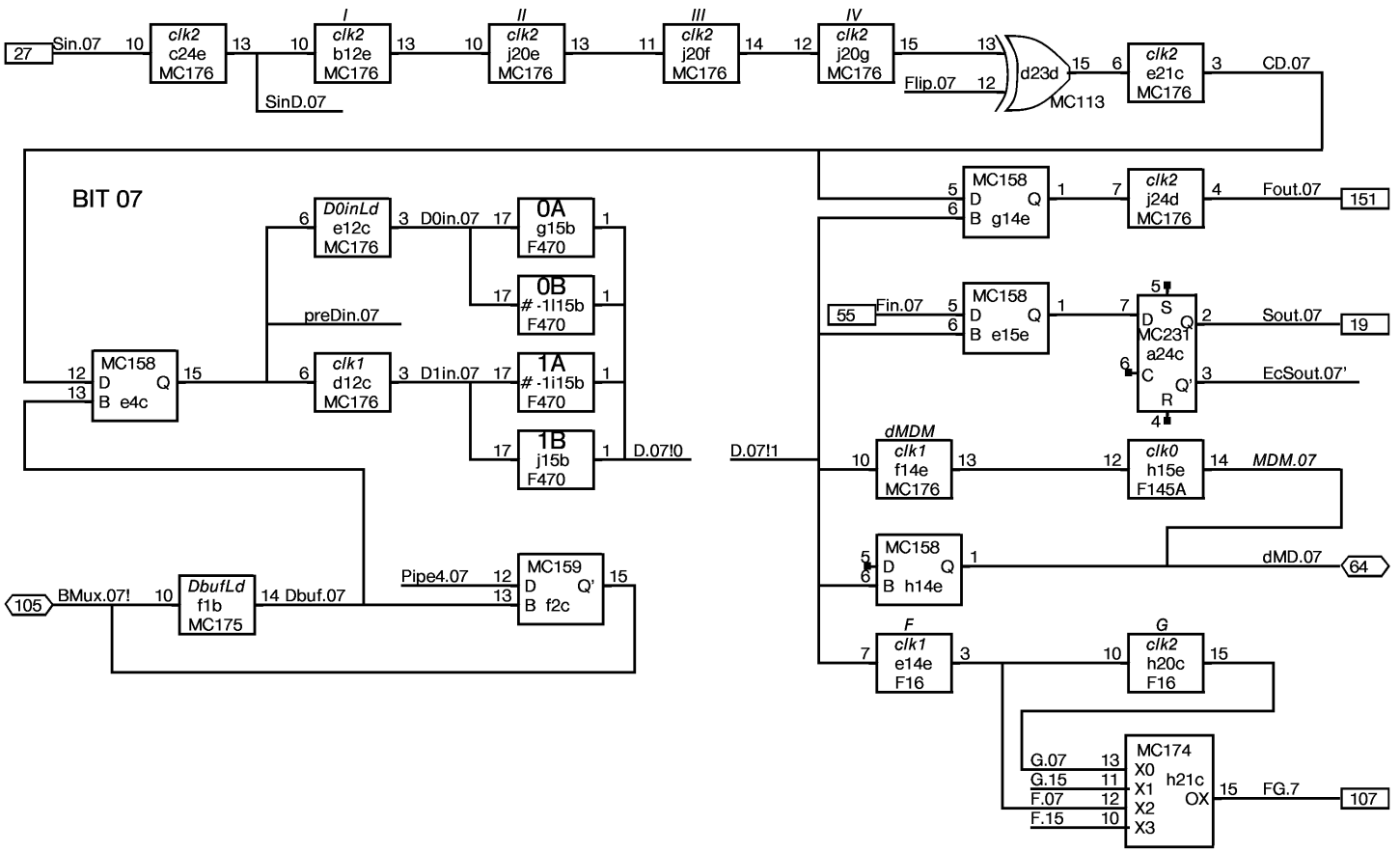

XEROX PARC/CSL	Project	Memory data board	File	Designer	Rev	Date	Page
	Dorado	Bit slices 06-07	MemD10.sil	D. Clark	Ca	7/11/79	10

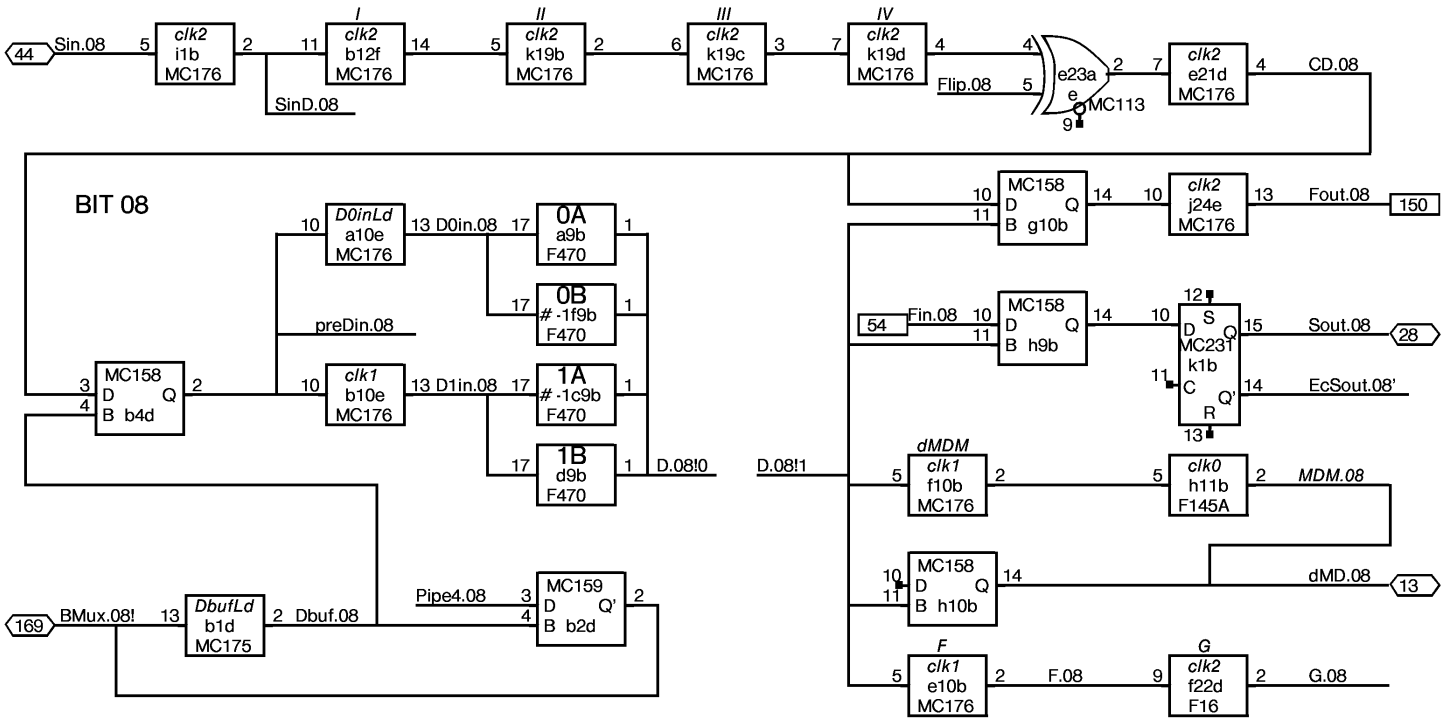

SURPRISE!
FG.8 is on bit slice 16

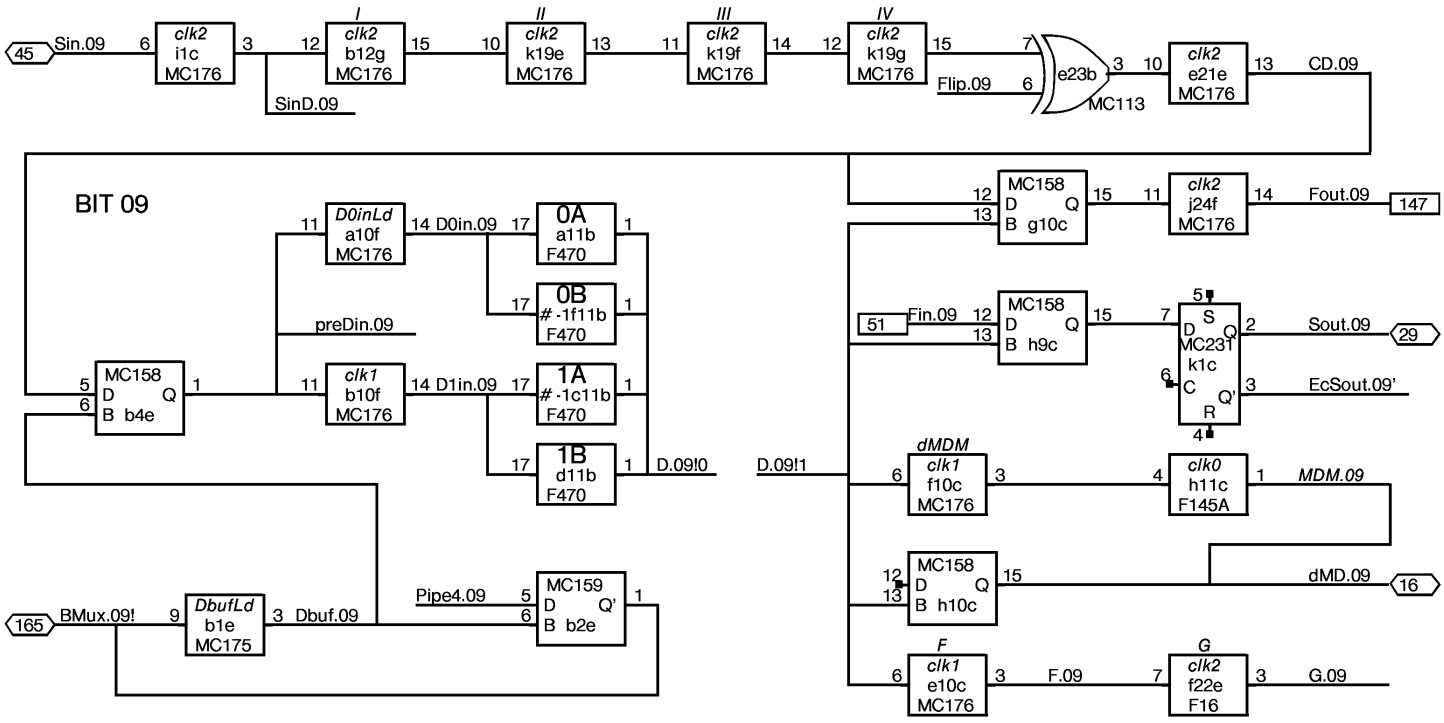

XEROX PARC/CSL	Project	Memory data board	File	Designer	Rev	Date	Page
	Dorado	Bit slices 8-9	MemD11.sil	D. Clark	Ca	7/11/79	11

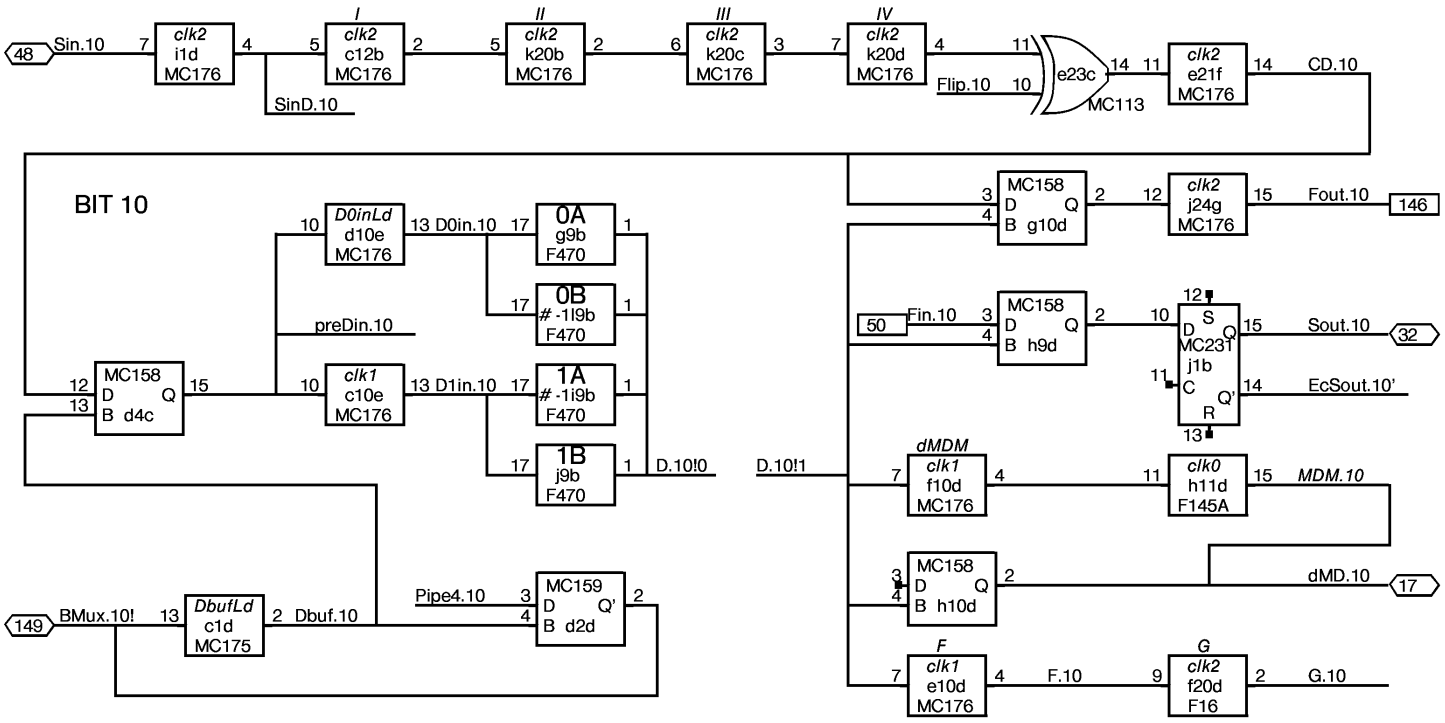

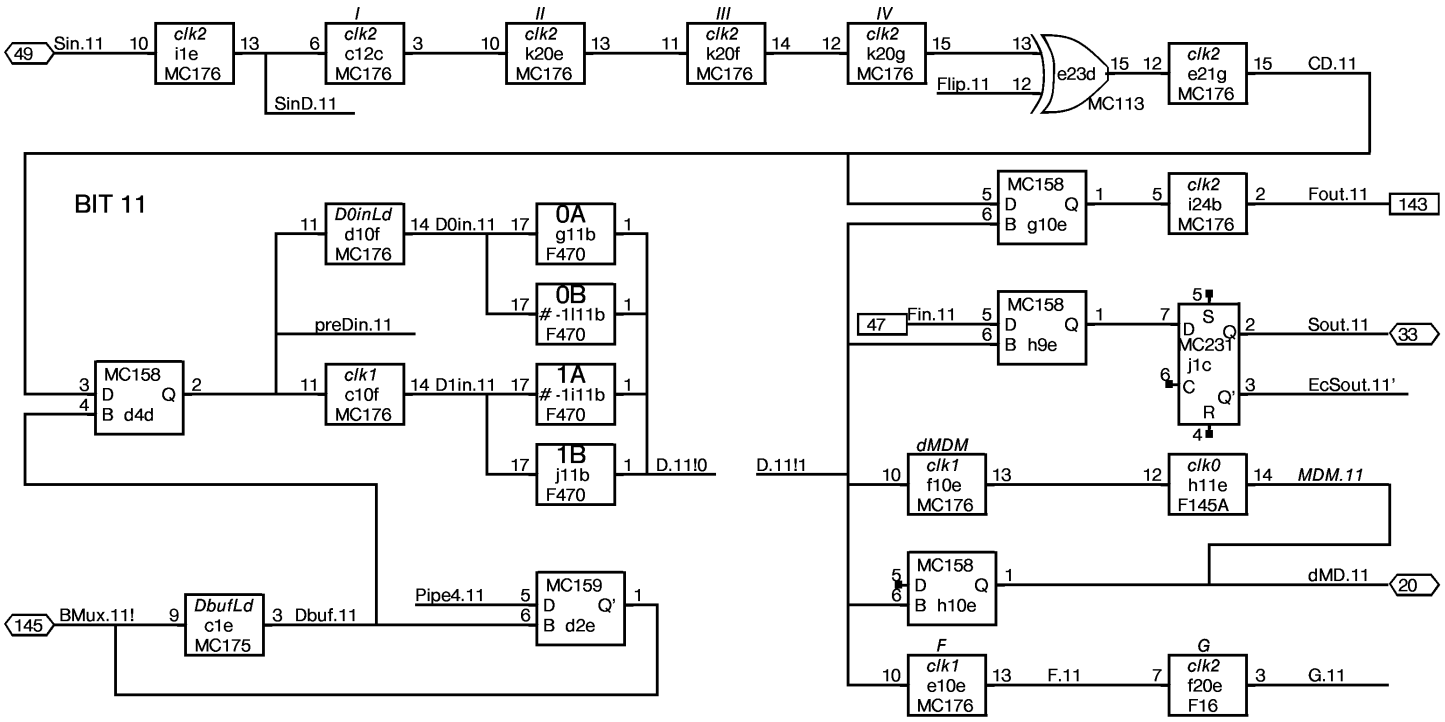

XEROX PARC/CSL	Project	Memory data board	File	Designer	Rev	Date	Page
	Dorado	Bit slices 10-11	MemD12.sil	D. Clark	Ca	7/11/79	12

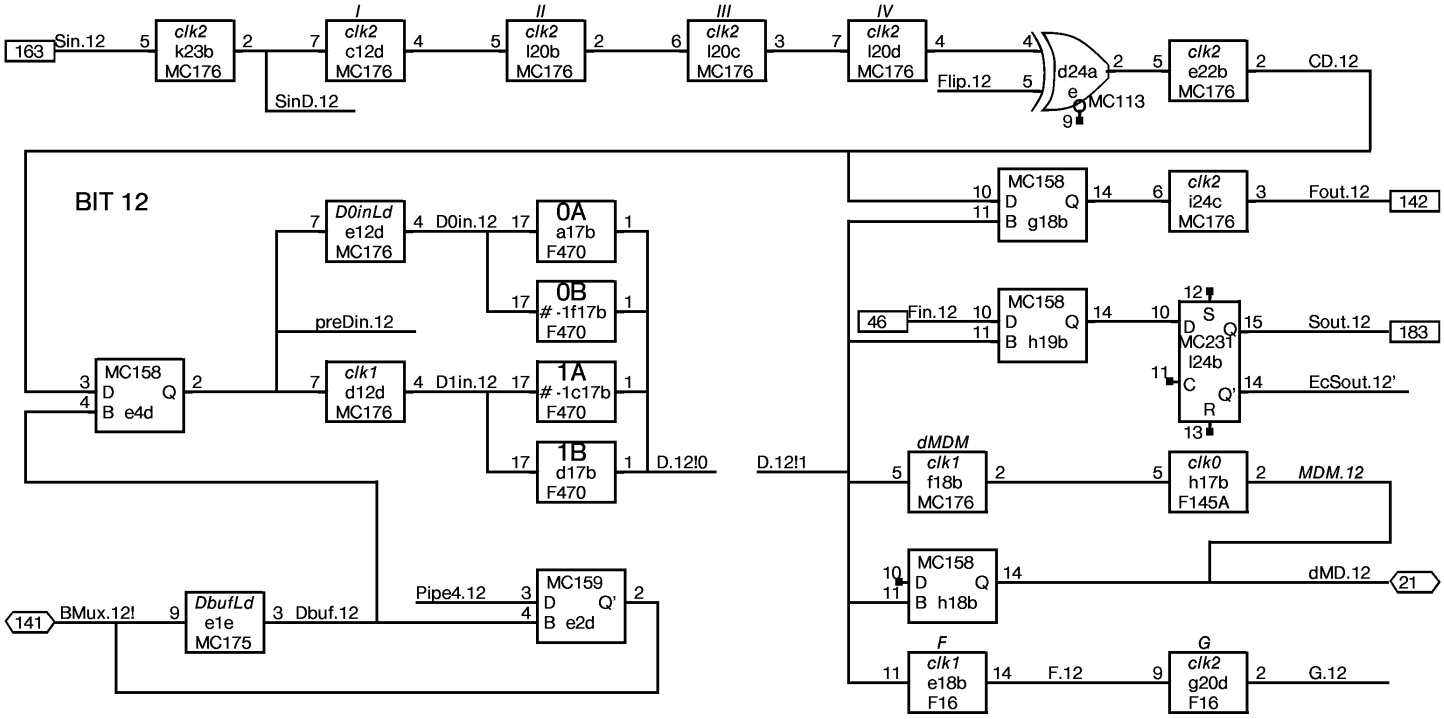

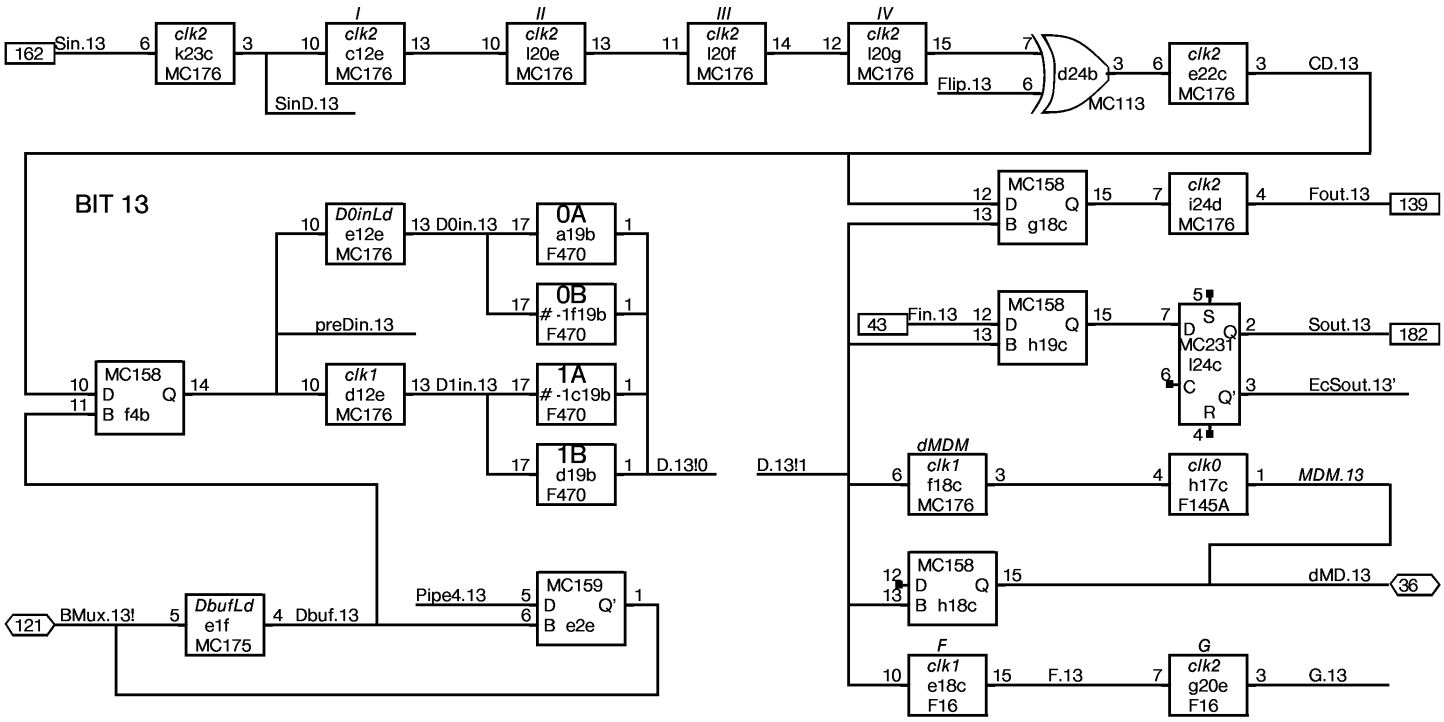

XEROX PARC/CSL	Project	Memory data board	File	Designer	Rev	Date	Page
	Dorado	Bit slices 12-13	MemD13.sil	D. Clark	Ca	7/11/79	13

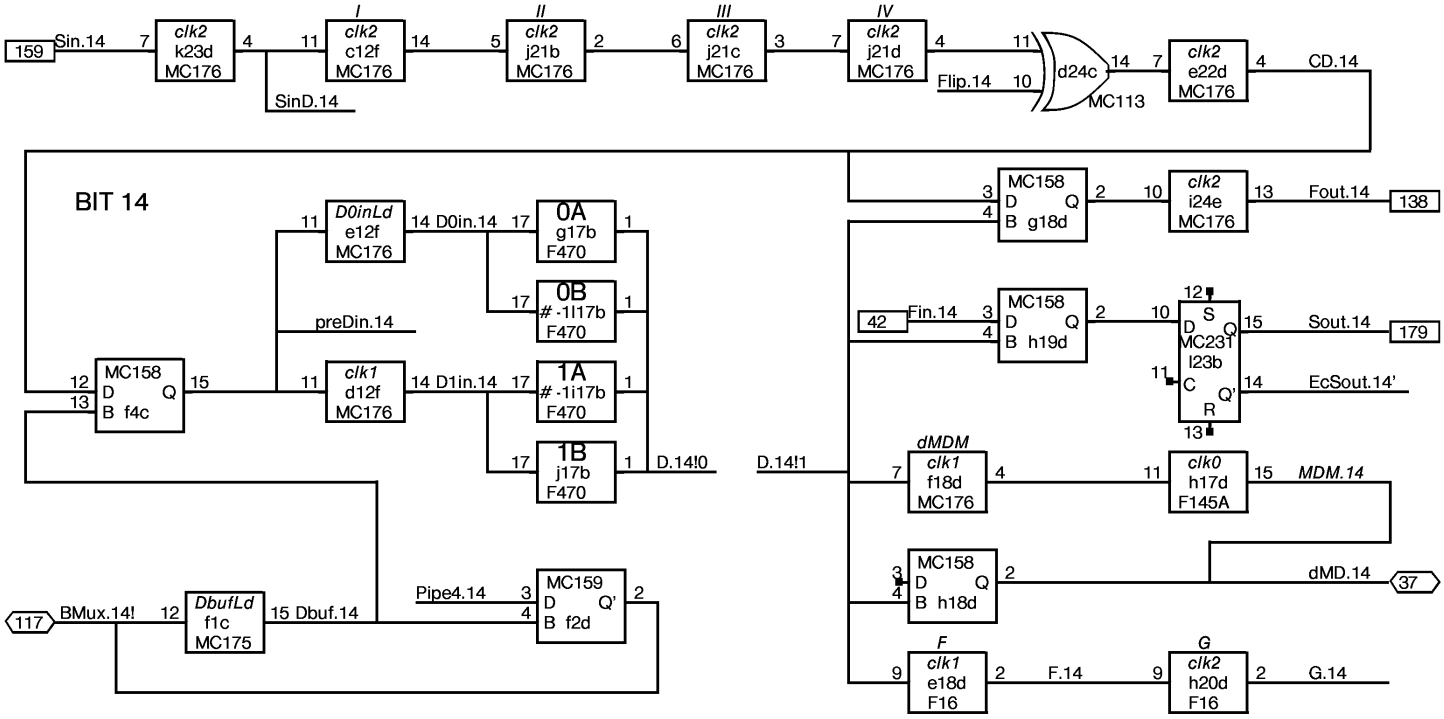

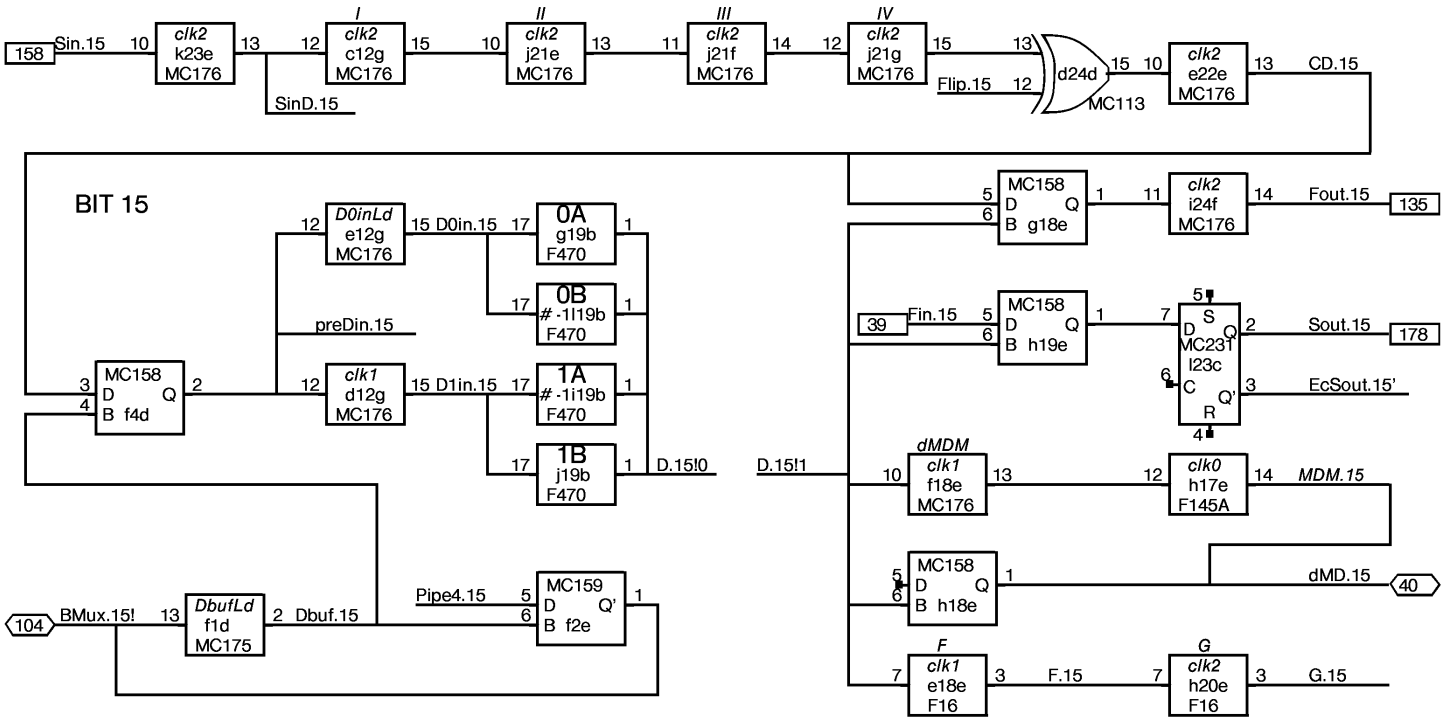

XEROX PARC/CSL	Project	Memory Data board Bit slices 14-15	File	Designer	Rev	Date	Page
	Dorado		MemD14.sil	D. Clark	Ca	7/11/79	14

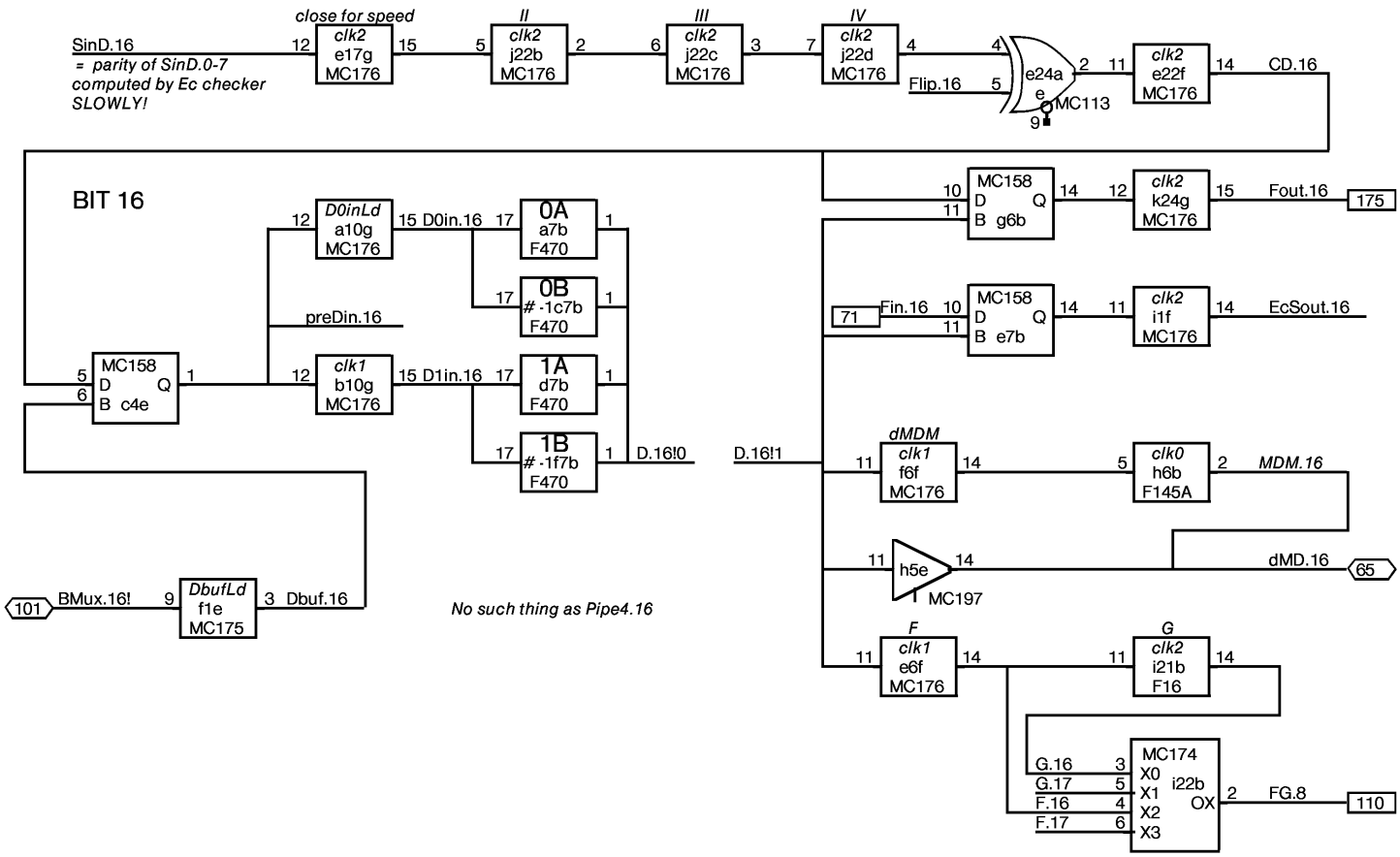

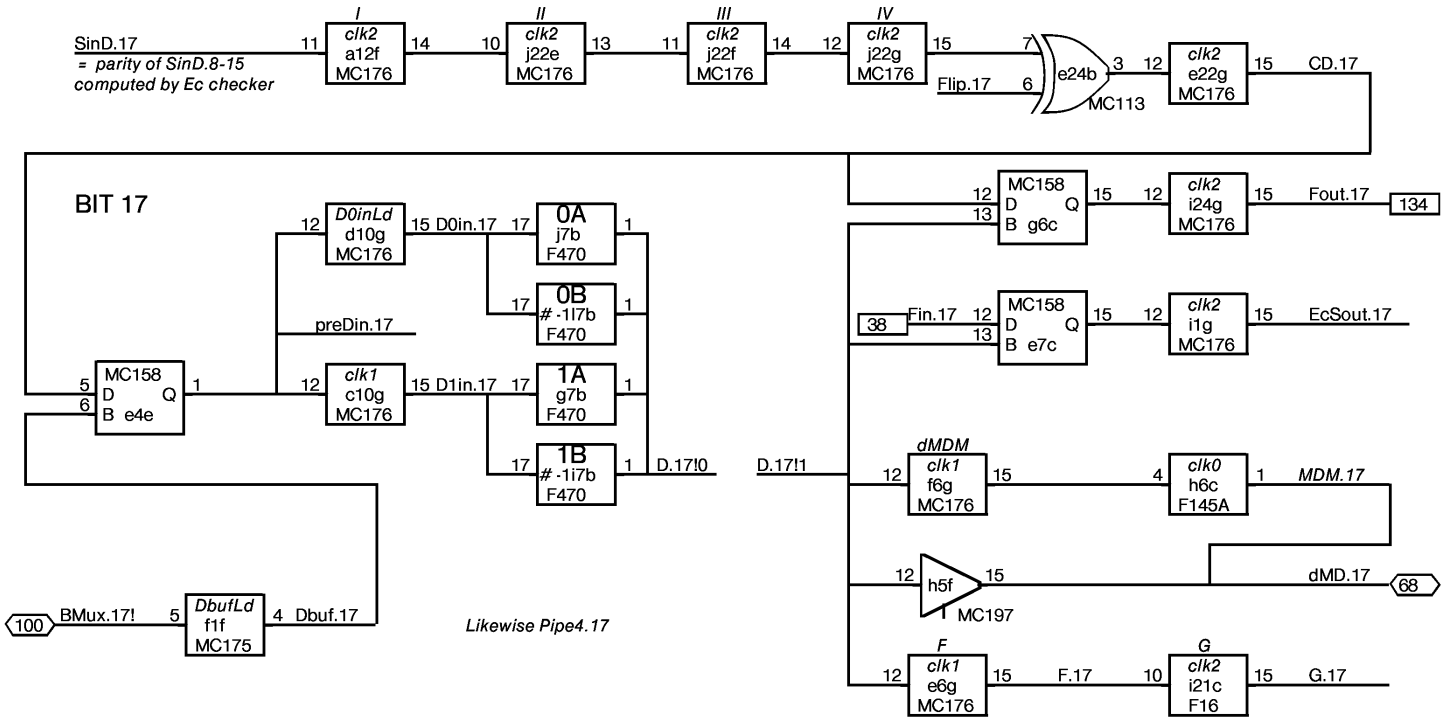

XEROX PARC/CSL	Project	Memory data board	File	Designer	Rev	Date	Page
	Dorado	Bit slices 16-17	MemD15.sil	D. Clark	Ca	7/11/79	15

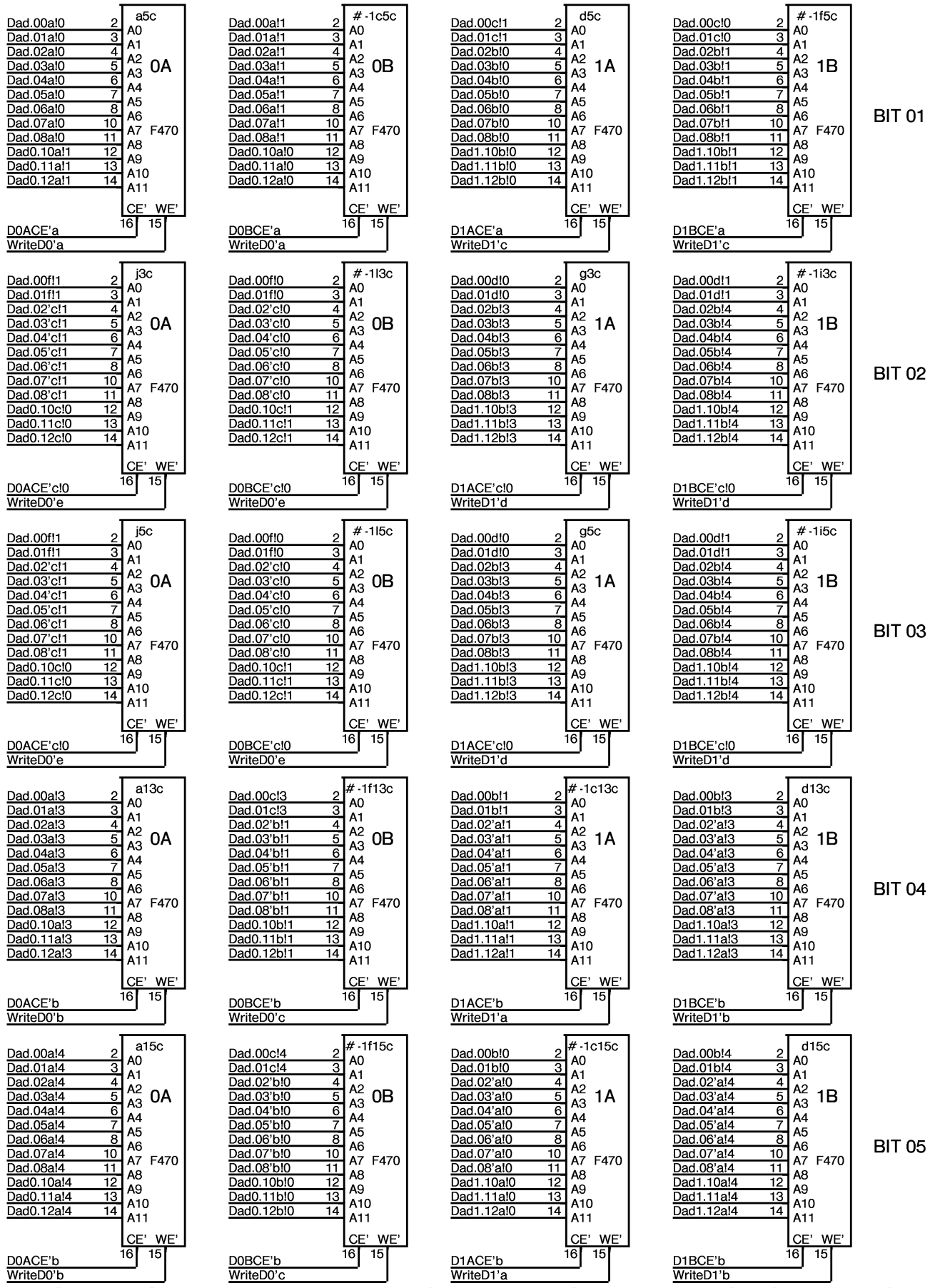

XEROX PARC/CSL	Project	Memory data board	File	Designer	Rev	Date	Page
	Dorado	D memory addressing 01-05	MemD16.sil	D. Clark	Ca	7/11/79	16

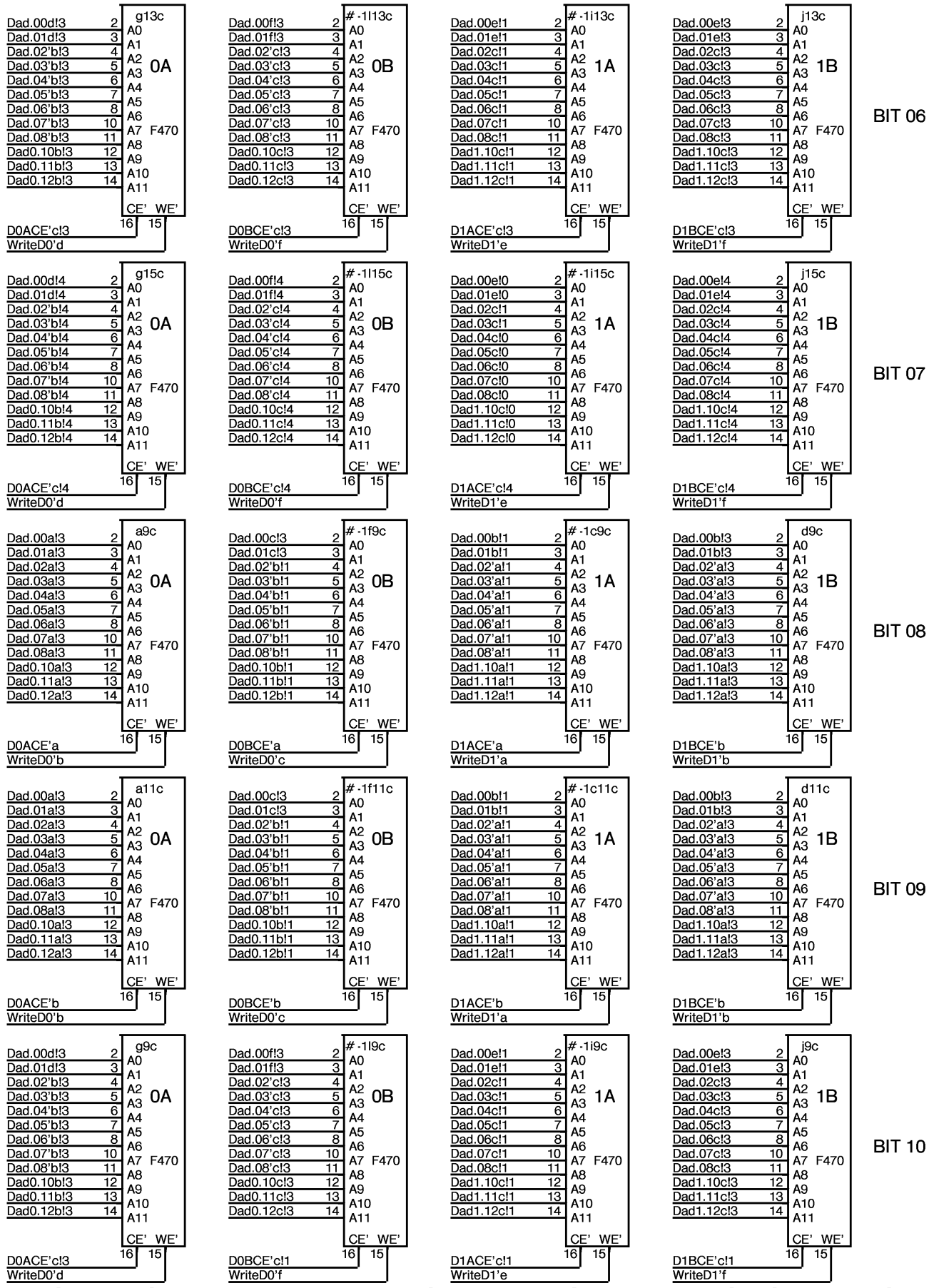

XEROX PARC/CSL	Project	Memory data board	File	Designer	Rev	Date	Page
	Dorado	D memory addressing 06-10	MemD17.sil	D. Clark	Ca	7/11/79	17

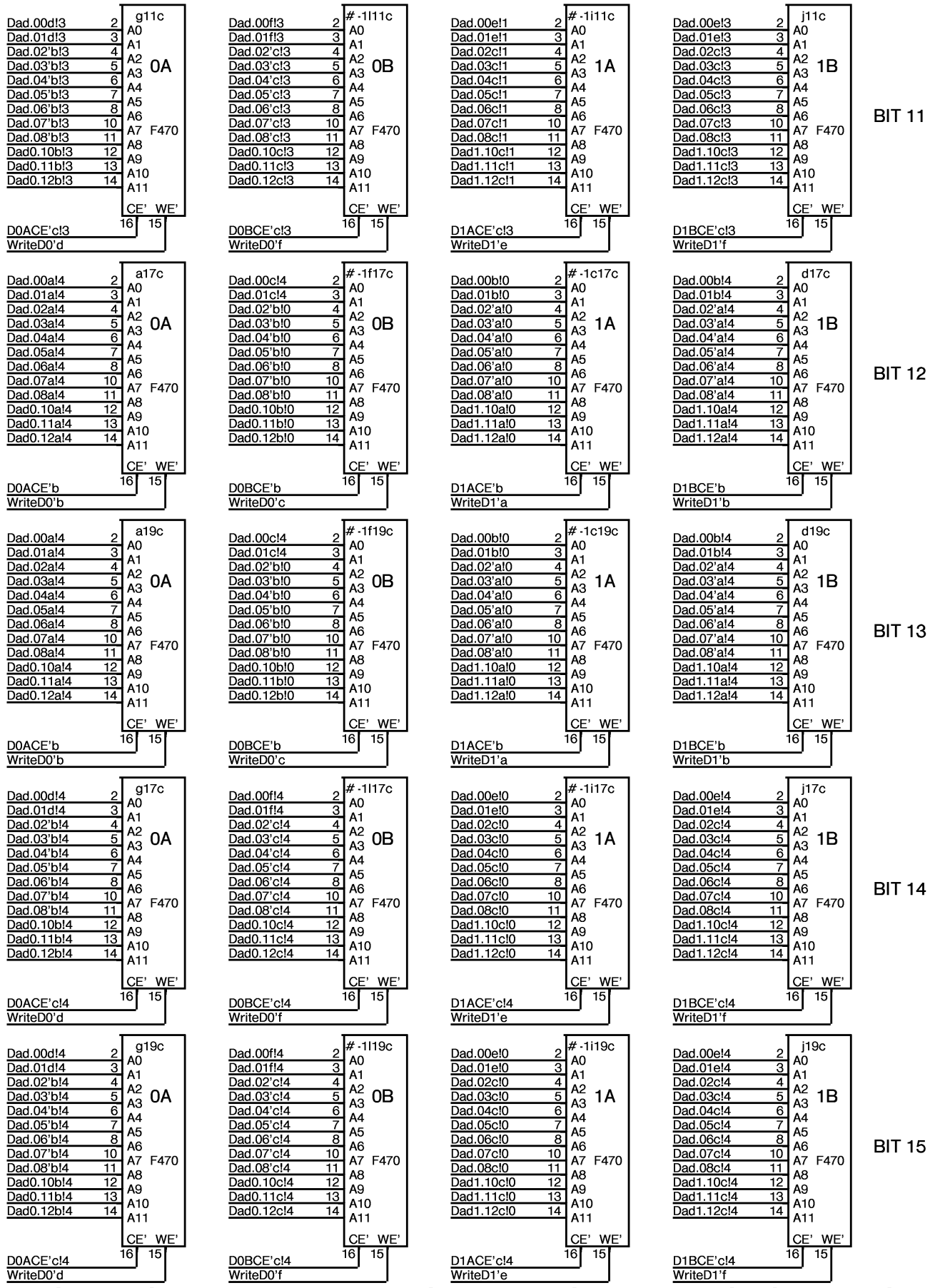

XEROX PARC/CSL	Project	Memory data board	File	Designer	Rev	Date	Page
	Dorado	D memory addressing 11-15	MemD18.sil	D. Clark	Ca	7/11/79	18

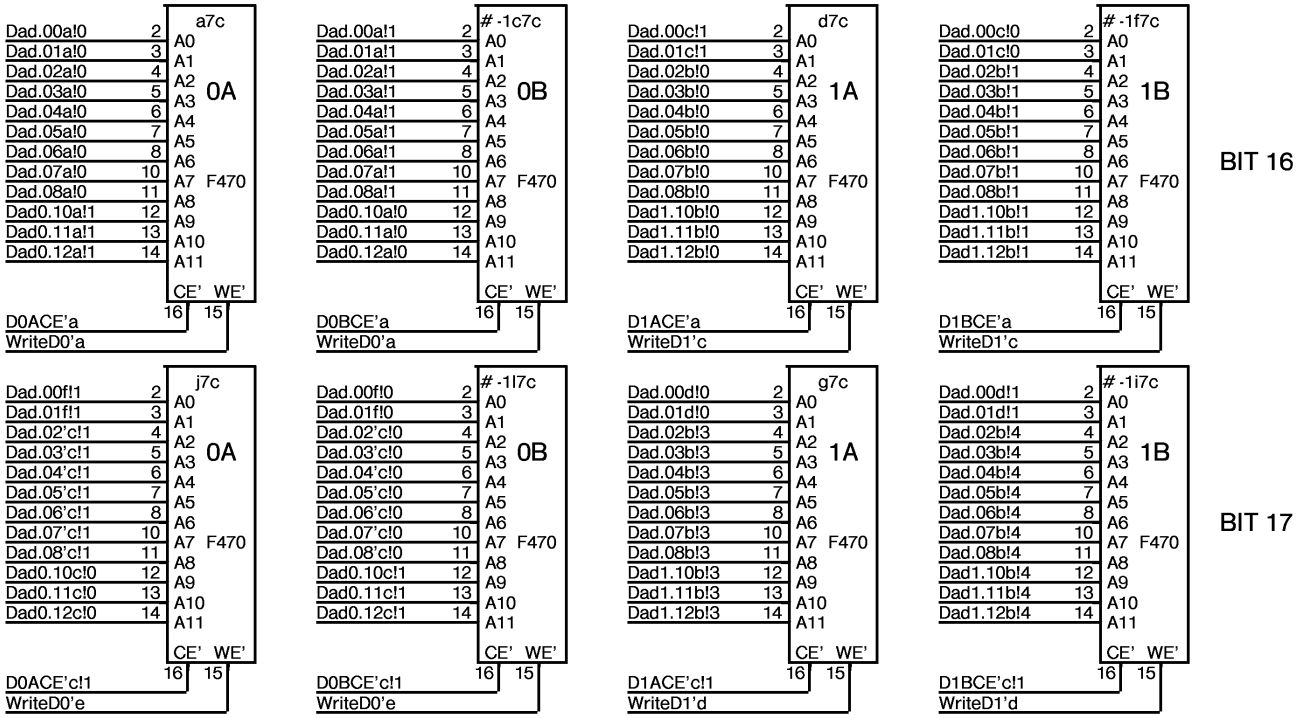

XEROX PARC/CSL	Project	Memory data board	File	Designer	Rev	Date	Page
	Dorado	D memory addressing 16-17	MemD19.sil	D. Clark	Ca	7/11/79	19

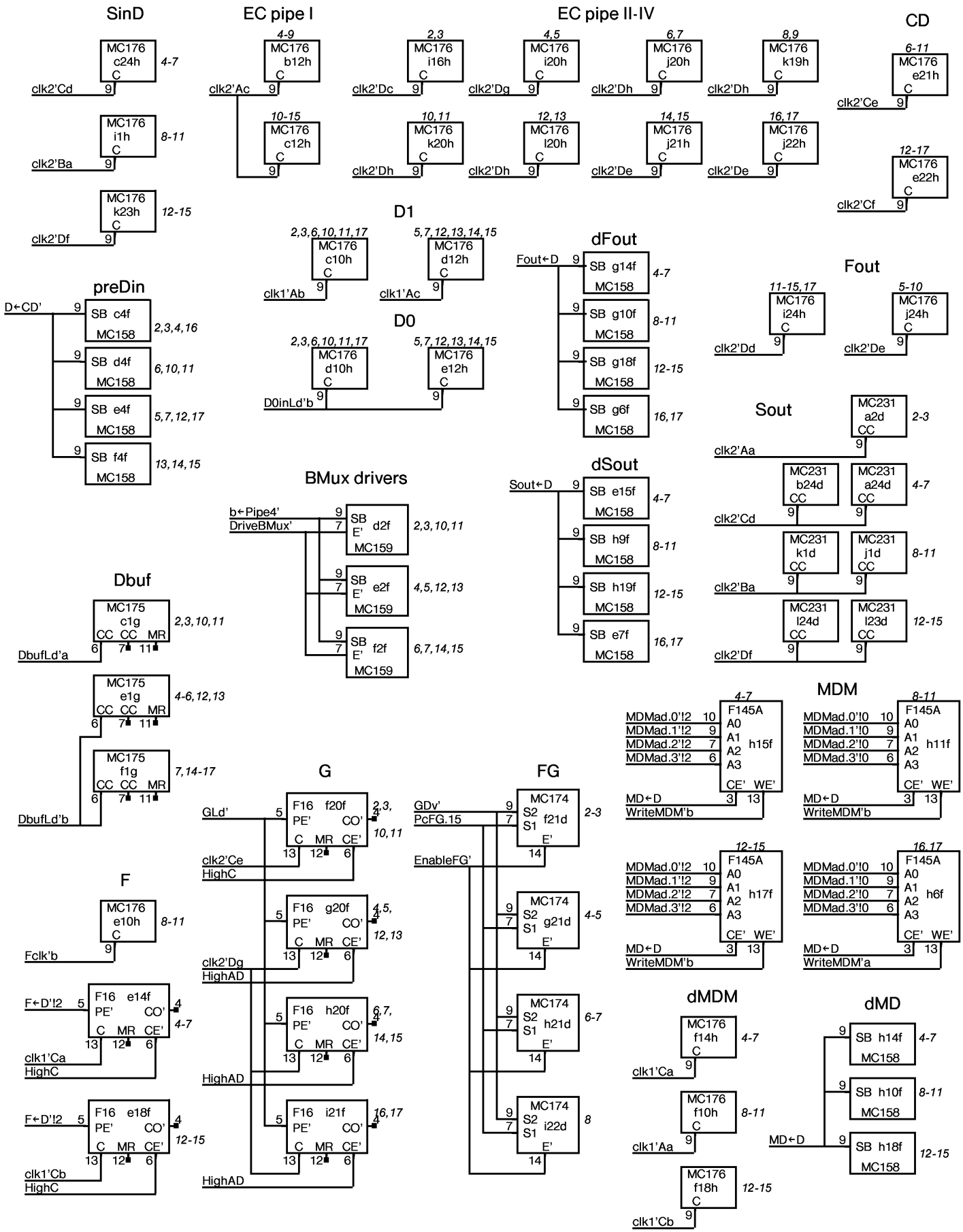

XEROX PARC/CSL	Project	Memory data board	File	Designer	Rev	Date	Page
	Dorado	Bit slice control	MemD20.sil	D. Clark	Ca	7/09/79	20

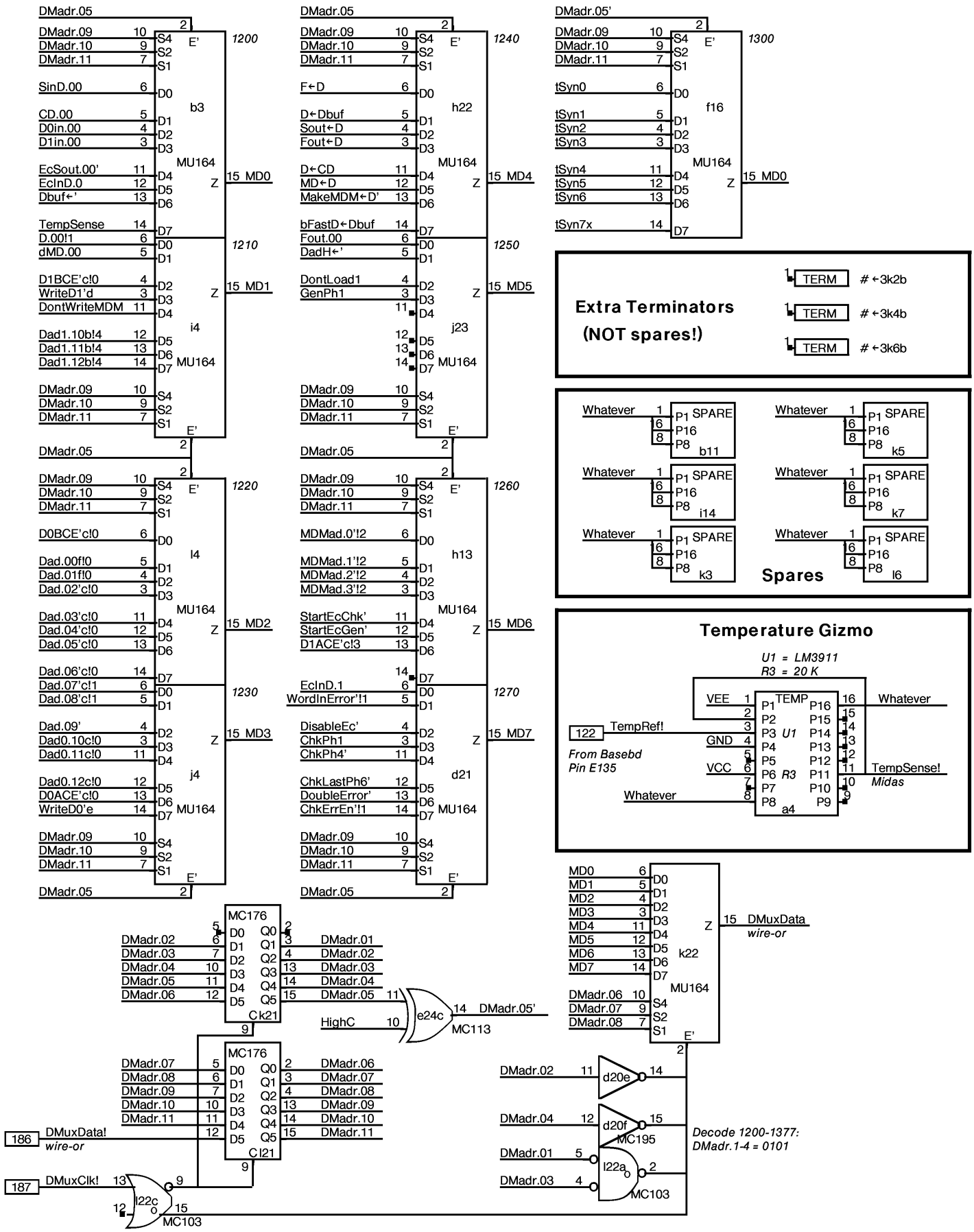

XEROX PARC/CSL	Project	Memory data board	File	Designer	Rev	Date	Page
	Dorado	Mufflers, Temp, Spares	MemD21.sil	D. Clark	Ca	7/11/79	21

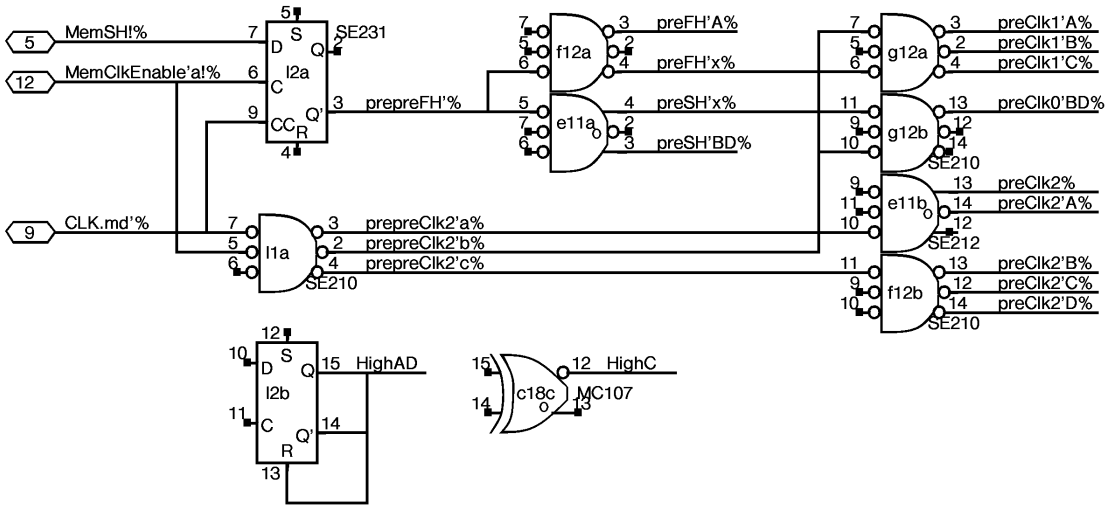

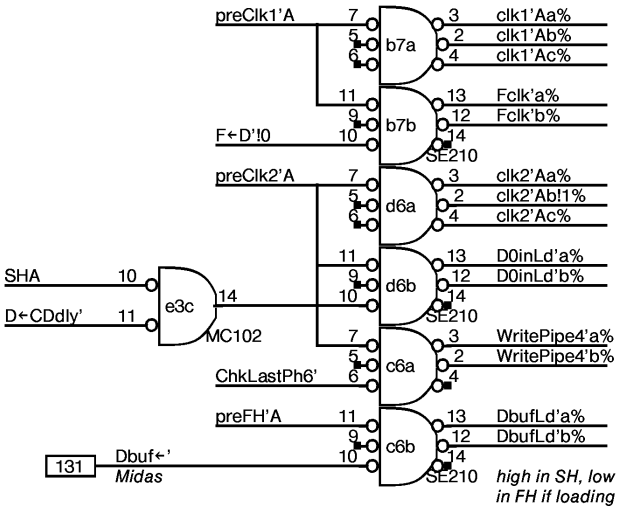

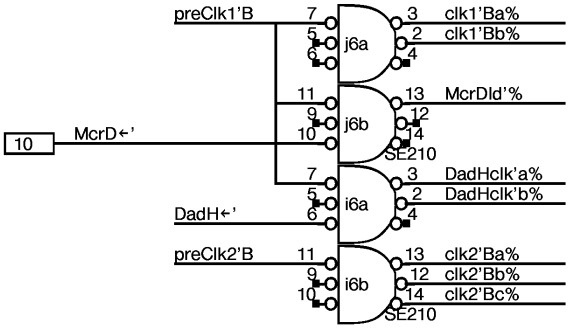

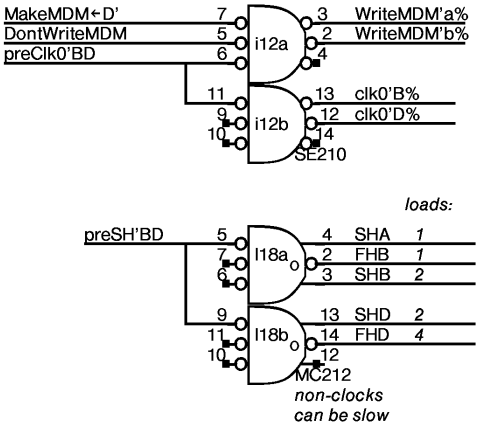

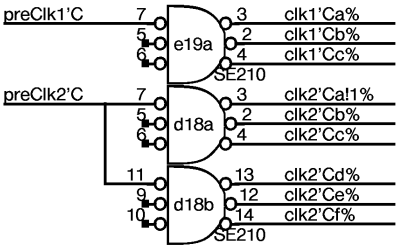

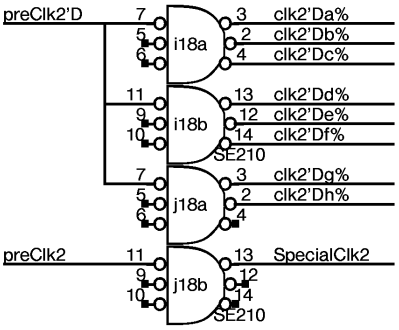

XEROX PARC/CSL	Project	Memory data board	File	Designer	Rev	Date	Page
	Dorado	Clocks	MemD22.sil	D. Clark	Ca	7/09/79	22

(Cxxx) A	a 181	b 168	c 153	d 137	e 124	f 109	93 g	80 h	64 i	48 j	33 k	20 l	B
1	Sout drvr 0-1 231 2a	BMux rcvr 0,1,8,9 175 *a	BMux rcvr 2,3,10,11 175 *a	EcOut 0,2,4,6 dSTPerr 176 2a	BMux rcvr 4-6,12,13 175 *b	BMux rcvr 7,14-17 175 *b	Dad rcvrs 2,3 231 *a	6,7 231 *b	SinD.8-11 EcSt.16,17 176 2a	Sout drvr 10-11 231 2a	Sout drvr 8-9 231 2a	Clock 210	1
2	Sout drvr 2-3 231 2a	BMux drvr 0,1,8,9 159	SinD.0-3 EcInD.0 176 2a	BMux drvr 2,3,10,11 159	BMux drvr 4,5,12,13 159	BMux drvr 6,7,14,15 159	4,5 231 *a	8,9 231 *b	0-5 TestSyn 6-8 176 *	176 *	TERM	231	2
3	D0A.00 a,a,a,a,a 415A	SinD.0 CD.0 Dbuf← D0-3 1in 0 EcSout.0 EcInD.0	D0B.00 a,a,a,a,a 415A	D1A.00 c,b,b,a,c 415A	MemError ECFault preD0inLd DriveBMux 102	D1B.00 c,b,b,a,c 415A	D1A.02 d,b,b,c,d 415A	Pipe34Ad DntWrtMDM 176 0	D1B.02 d,b,b,c,d 415A	D0A.02 f,'c,c,c,e 415A		D0B.02 f,'c,c,c,e 415A	3
4	TempSense Gizmo PLAT	0,1,8,9 158	2,3,4,16 158	preDin 6,10,11 158	5,7,12,17 158	13,14,15 158	dFout 0-3 158	MdM 0-3 145 *a	CETB D.0 10-12(1) Write1 DWrMDM dMD.0	Dad.7-9 CE0A, 10-12'(0) Write0	TERM	Dad.0-6 CE0B MU164	4
5	D0A.01 a,a,a,a,a 415A	12-15 145	D0B.01 a,a,a,a,a 415A	D1A.01 c,b,b,a,c 415A	dSout 0-3 158	D1B.01 c,b,b,a,c 415A	D1A.03 d,b,b,c,d 415A	dMd 0-3,16,17 197	D1B.03 d,b,b,c,d 415A	D0A.03 f,'c,c,c,e 415A		D0B.03 f,'c,c,c,e 415A	5
6	4-7 Pipe4 8-11 145	145	clks 210	clks 210	F 0-3,16,17 176 *a	dMdM 0-3,16,17 176 1a	dFout 16,17 158	MdM 16,17 145 *a	clks 210	clks 210	TERM		6
7	D0A.16 a,a,a,a,a 415A	clks 210	D0B.16 a,a,a,a,a 415A	D1A.16 c,b,b,a,c 415A	dSout 16,17 158	D1B.16 c,b,b,a,c 415A	D1A.17 d,b,b,c,d 415A	Dad1 10-12 b F16 1a	D1B.17 d,b,b,c,d 415A	D0A.17 f,'c,c,c,e 415A		D0B.17 f,'c,c,c,e 415A	7
8	Dad0 10-12 a F16 2b0	Dad.2-5 a, 'a 101	Dad.6-8 a, 'a f←D' 101	Dad.0-1 a,b,c 210	Writes a,b,c 211	Dad.2-5 b, 'b 101	Dad.6-8 b, 'b b←Pipe4' 101	Writes d,e,f 210	Dad.0-1 d,e,f 210	Dad.2-5 c, 'c 101	Dad.6-8 c, 'c Dad.13' 101	Dad0 13 10-12 c F16 2b	8
9	D0A.08 a,a,a,a,b 415A	Dad1 10-12 a F16 1b	D1A.08 b,'a,a,a,a 415A	D1B.08 b,'a,a,b,b 415A	Dad0 10-12 b F16 2b2	D0B.08 c,'b,b,a,c 415A	D0A.10 d,'b,b,c,d 415A	dSout 8-11 158	D1A.10 e,c,c,c,e 415A	D1B.10 e,c,c,c,f 415A	Dad1 10-12 c F16 1b	D0B.10 f,'c,c,c,f 415A	9
10	D0in 0,1,4, 8,9,16 176 *a	D1in 0,1,4, 8,9,16 176 1b	D1in 2,3,6, 10,11,17 176 1b	D0in 2,3,6, 10,11,17 176 *b	F 8-11 176 *b	dMdM 8-11 ClearWA 176 1a	dFout 8-11 158	dMd 8-11 158	CE's 0A, 1A 210	CE's 0B, 1B 210	preCE 159	preCE DntLoad0 1664	10
11	D0A.09 a,a,a,b,b 415A		D1A.09 b,'a,a,b,a 415A	D1B.09 b,'a,a,b,b 415A	preclks 212	D0B.09 c,'b,b,b,c 415A	D0A.11 d,'b,b,c,d 415A	MdM 8-11 145 *b	D1A.11 e,c,c,c,e 415A	D1B.11 e,c,c,c,f 415A	B 180	D0B.11 f,'c,c,c,f 415A	11
12	0-3,17 176 2c	Ec pipe I 4-9 176 2c	10-15 176 2c	D1in 5,7,12 13,14,15 176 1c	D0in 5,7,12 13,14,15 176 *b	preclks 210	preclks 210	MDMad 141 2c	WriteMDM clk0'B,D 210	163	Generator A 180	163	12
13	D0A.04 a,a,a,b,b 415A	Cphi 172	D1A.04 b,'a,a,b,a 415A	D1B.04 b,'a,a,b,b 415A	ChkPhi F00 2a0	D0B.04 c,'b,b,b,c 415A	D0A.06 d,'b,b,c,d 415A	MDMad(4) CE1A StrtEcChk StrtEcGen	D1A.06 e,c,c,c,e 415A	D1B.06 e,c,c,c,f 415A	176 2b	D0B.06 f,'c,c,c,f 415A	13
14	0-7 163	8-15 163	SinD.17 170	ChkQWi ChkWi F16 2a0	F 4-7 F16 1a	dMDM.4-7 LastQWi 176 1a	dFout 4-7 158	dMd 4-7 158		C 180	D 180	E 180	14
15	D0A.05 a,a,a,b,b 415A	A 180	D1A.05 b,'a,a,b,a 415A	D1B.05 b,'a,a,b,b 415A	dSout 4-7 158	D0B.05 c,'b,b,b,c 415A	D0A.07 d,'b,b,c,d 415A	MdM 4-7 145 *b	D1A.07 e,c,c,c,e 415A	D1B.07 e,c,c,c,f 415A	F 180	D0B.07 f,'c,c,c,f 415A	15
16	B 180	Checker C 180	D 180	A-C 158	D-E 158	tSyni MU164	PipeII-IV 0,1 176 2c	Chk/Gen 3 dClearWA 104	PipeII-IV 2,3 176 2c	(D) D←CDdly 231 2b	A-C 158	(E) 231 2a	16
17	D0A.12 a,a,a,b,b 415A	E 180	D1A.12 b,'a,a,b,a 415A	D1B.12 b,'a,a,b,b 415A	ChkPh,etc. SinD.16dly 176 2a2	D0B.12 c,'b,b,b,c 415A	D0A.14 d,'b,b,c,d 415A	MdM 12-15 145 *b	D1A.14 e,c,c,c,e 415A	D1B.14 e,c,c,c,f 415A	D-E 158	D0B.14 f,'c,c,c,f 415A	17
18	tSyn0-3 F00 2b	tSyn4,7 231 2b	SinD.16 D←CD' HighC 107	clks 210	F 12-15 F16 1b	dMdM12-15 TickTockCE ChkLstPh6 176 1b	dFout 12-15 158	dMd 12-15 158	clks 210	clks 210	GenPhi F00 2a	FH, SH 212	18
19	D0A.13 a,a,a,b,b 415A	tSyn5,6 231 2b	D1A.13 b,'a,a,b,a 415A	D1B.13 b,'a,a,b,b 415A	clks 210	D0B.13 c,'b,b,b,c 415A	D0A.15 d,'b,b,c,d 415A	dSout 12-15 158	D1A.15 e,c,c,c,e 415A	D1B.15 e,c,c,c,f 415A	PipeII-IV 8,9 176 2h	D0B.15 f,'c,c,c,f 415A	19
20	Syni F16 2c	Corrector WordInError F00 2c	F00 2c	WdInError ChkPh,etc. DMadr' 195	CD 0-5 176 2e	G 2,3,10,11 F16 2e	G 4,5,12,13 F16 2g	G 6,7,14,15 F16 2g	PipeII-IV 4,5 176 2g	PipeII-IV 6,7 176 2h	PipeII-IV 10,11 176 2h	PipeII-IV 12,13 176 2h	20
21	DblError 170	Error ChkErrEn' 109	Syn3 D←Dbufdly 231 2c	EcCheck stuff MU164	6-11 176 2e	FG 2,3 174	FG 4,5 174	FG 6,7 174	G 16,17 F16 2g	PipeII-IV 14,15 176 2e	1-5 Midas 6-11 176	176	21
22	Flips16,17 ChkErrEn' 102	Flips 0-7 162	Flips 8-15 162	dCD 0-3 113	12-17 176 2f	G 0,1,8,9 F16 2f	preWrite 231 *	X←Ys MU164	FG 8 174	PipeII-IV 16,17 176 2e	DMuxData 164	Midas 2 Bank0CE 103	22
23	4-7 F16 1c	dPipe4 8-11 F16 1c	12-15 F16 1c	4-7 113	8-11 113	FG 0,1 174	dMD←D DntLoad1 dD←Dly 106	preWrite bTransport 102	DadH←' 231 0	Fout.0 DntLd1, DadH←' GenPh1	SinD.12-15 D←CDdlydly 176 2f	Sout drvr 14-15 231 2f	23
24	Sout drvr 6-7 231 2d	Sout drvr 4-5 231 2d	SinD.4-7 EcInD.1 ChkPh5w.o. 176 2d	12-15 113	16,17 DMadr.05' 113	EcOut 1,3,5,7 D←dly' 176 2f	MakeX rcvr 176 2d	bFastD←Dbf preWrite 1664	Fout drivers 11-15,17 176 2d	5-10 176 2e	0-4,16 176 2f	Sout drvr 12-13 231 2f	24
C (Exxx)	a 11	b 26	c 39	d 55	e 70	f 86	99 g	114 h	129 i	143 j	159 k	174 l	D

D chip code: Dad.0-1,2-8,10-12,CE,Write

XEROX PARC/CSL	Project	Reference	File	Designer	Rev	Date	Page
	Dorado	Memory data board Layout	MemD23.sil	D. Clark	Ca	7/11/79	23