Hunter Douglas Window Coverings Components PRICE LIST

ALPHA AWNING SERIES COMPONENTRY: STRAIGHT DROP - CRANK OPERATED

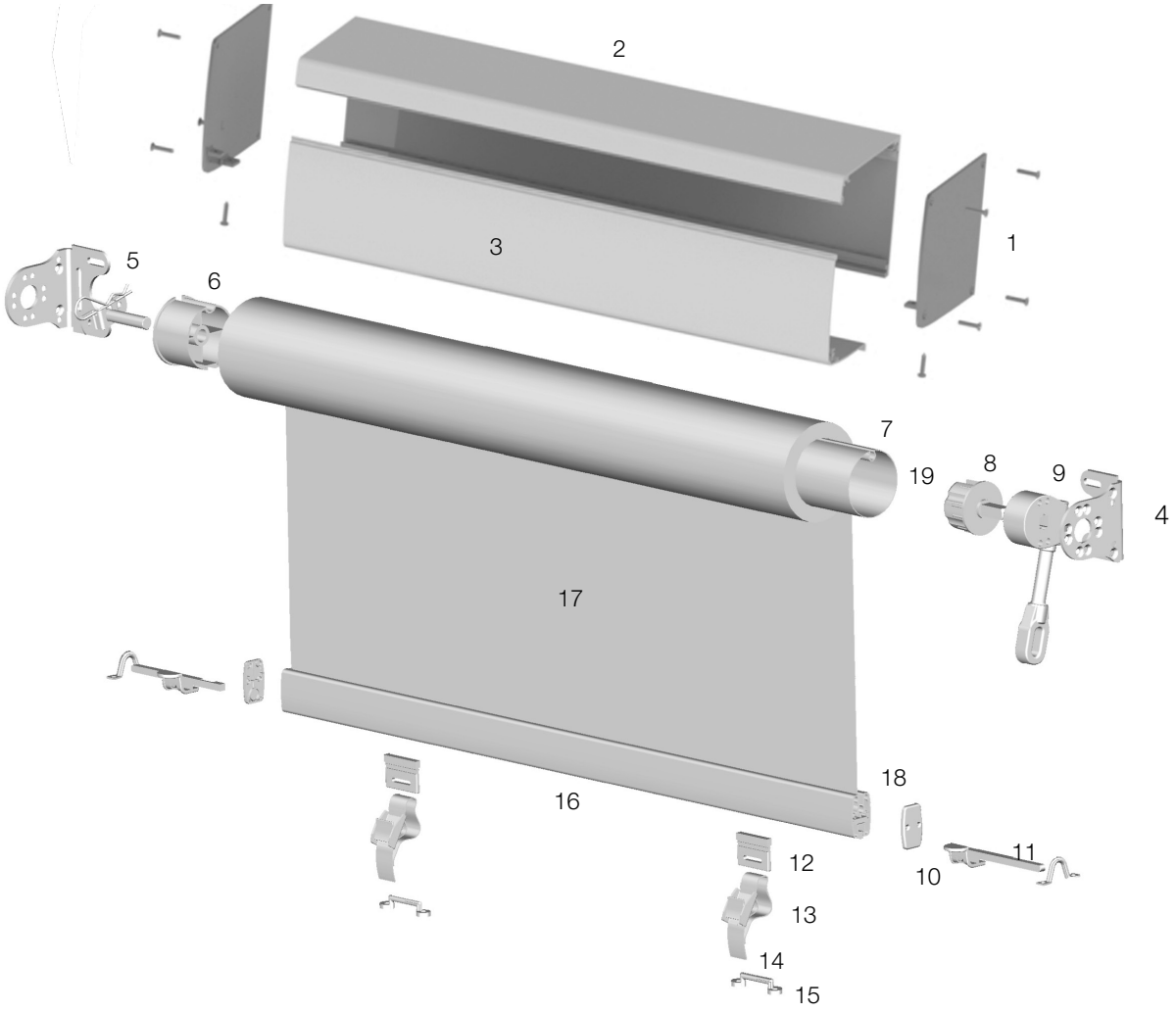

No	Part	Description
1	46.608.XXX	HEADBOX END CAP LH & RH
2	46.005.XXX	HEADBOX BACK PLATE
3	46.012.XXX* 46.013.XXX*	R HEADBOX FRONT COVER (CLOSED) R HEADBOX FRONT COVER (OPEN)
4	46.019.XXX	100MM UNIVERSAL BRACKET
5	46.002.XXX	PIVOT PIN & PLATE
6	46.506.000 44.210.000 46.507.000	60MM IDLE END 70MM IDLER WITH HOLE 78MM IDLE END
7	42.180.049 46.522.500 46.522.700 46.612.500 46.612.700	60MM TUBE 70MM TUBE 5MT 70MM TUBE 7MT 78MM TUBE 5MT 78MM TUBE 7MT
8	42.603.855 44.209.000 46.504.000 46.505.000	60MM DRIVE END - SMALL 70MM DRIVE END 78MM CRANK DRIVE END 60MM DRIVE END - 13MM SHAFT
9	46.502.XXX	9:1 GEAR
10	46.524.000	PLAIN BOTTOM RAIL END CAP
11	46.517.000	R BOTTOM RAIL LOCKING PIN
12	46.500.000	HOLD DOWN CLIP
13	42.236.000	BUCKLE FOR HOLD DOWN STRAP
14	42.230.000	RUA STRAP
15	42.204.000	BREECHING STAPLE
16	46.011.XXX	R BOTTOM RAIL
17	82.29X.XXX 44.XXX.XXX	CANVAS FABRIC EXTERNAL SCREEN FABRIC
18	44.132.000 42.421.855	4.2MM ES SOLID SPLINE 6MM SPLINE
19	42.198.000 42.421.855	3.5MM HARD SPLINE 6MM SPLINE

*000 - MILL, 100 -SILVER PEARL, 134-MOMBASA, 734-YALUMBA, 737-CHARDONNAY, 810-THUNDERCLOUD, 850-WHITE SATIN

Hunter Douglas Window Coverings Components PRICE LIST

ALPHA AWNING SERIES COMPONENTRY: CABLE GUIDE - CRANK OPERATED

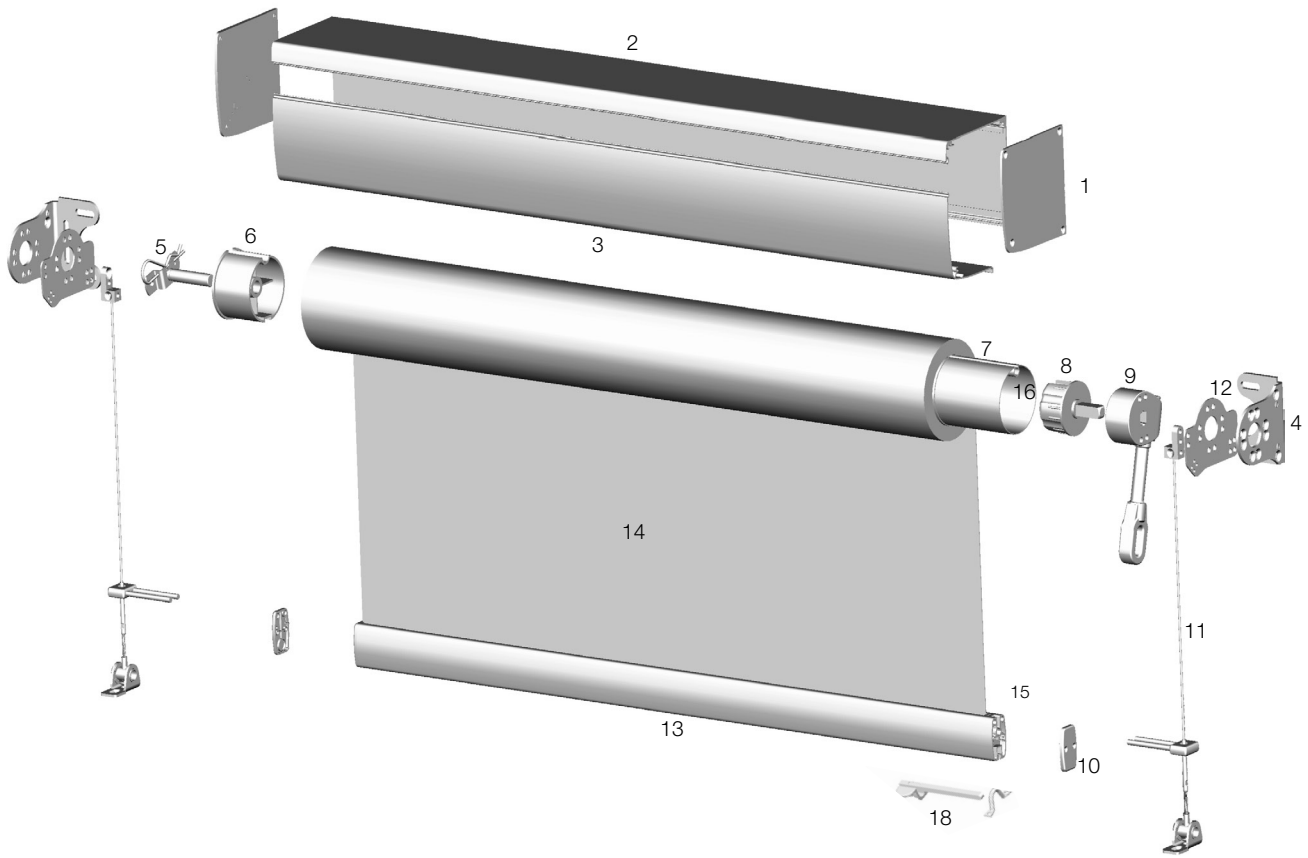

No	Part	Description
1	46.608.XXX	HEADBOX END CAP LH & RH
2	46.005.XXX	HEADBOX BACK PLATE
3	46.012.XXX* 46.013.XXX*	R HEADBOX FRONT COVER (CLOSED) R HEADBOX FRONT COVER (OPEN)
4	46.019.XXX	100MM UNIVERSAL BRACKET
5	46.002.XXX	PIVOT PIN & PLATE
6	46.506.000 44.210.000 46.507.000	60MM IDLE END 70MM IDLE END 78MM IDLE END
7	42.180.049 46.522.500 46.522.700 46.612.500 46.612.700	60MM TUBE 70MM TUBE 5MT 70MM TUBE 7MT 78MM TUBE 5MT 78MM TUBE 7MT
8	42.603.855 44.209.000 46.504.000 46.505.000	60MM DRIVE END - SMALL 70MM DRIVE END 78MM CRANK DRIVE END 60MM DRIVE END - 13MM SHAFT
9	46.502.XXX	9:1 GEAR
10	46.524.000	PLAIN BOTTOM RAIL END CAP
11	46.108.063	CG CABLE GUIDE SET
12	46.530.063	EXTENSION PLATE
13	46.011.XXX	R BOTTOM RAIL
14	82.29X.XXX 44.XXX.XXX	CANVAS FABRIC EXTERNAL SCREEN FABRIC
15	44.132.000 42.421.855	4.2MM ES SOLID SPLINE 6MM SPLINE
16	42.198.000 42.421.855	3.5MM HARD SPLINE 6MM SPLINE
17	46.520.000	HEADBOX REVEAL CLIP
18	46.517.000	R BOTTOM RAIL LOCKING PIN

*000 - MILL, 100 -SILVER PEARL, 134-MOMBASA, 734-YALUMBA, 737-CHARDONNAY, 810-THUNDERCLOUD, 850-WHITE SATIN

Hunter Douglas Window Coverings Components PRICE LIST

ALPHA AWNING SERIES COMPONENTRY: DEEP CHANNEL - CRANK OPERATED

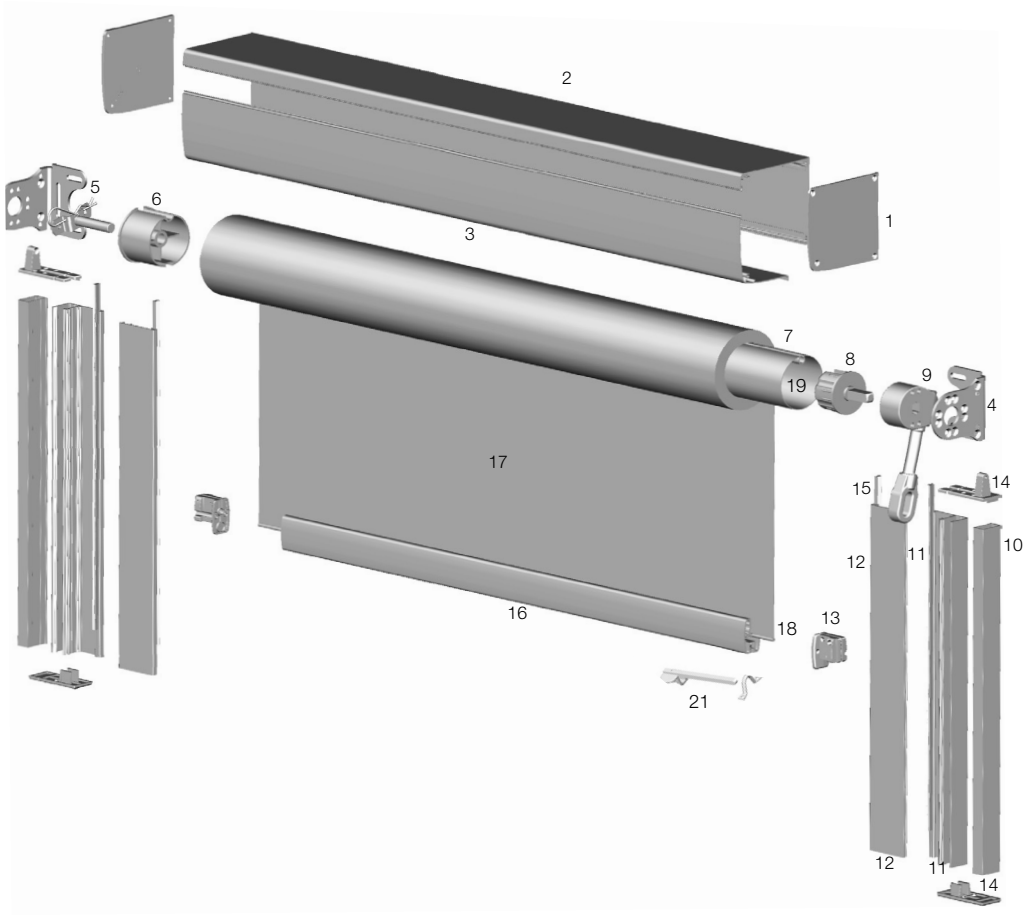

No	Part	Description
1	46.608.XXX	HEADBOX BOX END CAP LH & RH
2	46.005.XXX	HEADBOX BACK PLATE
3	46.012.XXX* 46.013.XXX*	R HEADBOX FRONT COVER (CLOSED) R HEADBOX FRONT COVER (OPEN)
4	46.019.XXX	100MM UNIVERSAL BRACKET
5	46.002.XXX	PIVOT PIN & PLATE
6	46.506.000 44.210.000 46.507.000	60MM IDLE END 70MM IDLER WITH HOLE 78MM IDLE END
7	42.180.049 46.522.500 46.522.700 46.612.500 46.612.700	60MM TUBE 70MM TUBE 5MT 70MM TUBE 7MT 78MM TUBE 5MT 78MM TUBE 7MT
8	42.603.855 44.209.000 46.504.000	60MM DRIVE END - SMALL 70MM DRIVE END 78MM CRANK DRIVE END
9	46.502.XXX	9:1 GEAR
10	46.020.XXX	DEEP CHANNEL SPACER
11	46.600.XXX	DC ZS CHANNEL
12	46.601.XXX	DC ZS CHANNEL COVER
13	46.205.000	DC BOTTOM RAIL END CAP
14	46.016.000	DC ZS CHANNEL END CAP SET
15	46.203.000	PILE BRUSH
16	46.011.XXX	R BOTTOM RAIL
17	82.29X.XXX 44.XXX.XXX	CANVAS FABRIC EXTERNAL SCREEN FABRIC
18	44.132.000 42.421.855	4.2MM ES SOLID SPLINE 6MM SPLINE
19	42.198.000 42.421.855	3.5MM HARD SPLINE 6MM SPLINE
21	46.517.000	R BOTTOM RAIL LOCKING PIN

*000 - MILL, 100 -SILVER PEARL, 134-MOMBASA, 734-YALUMBA, 737-CHARDONNAY, 810-THUNDERCLOUD, 850-WHITE SATIN

Hunter Douglas Window Coverings Components PRICE LIST

ALPHA AWNING SERIES COMPONENTRY: SRS V1 SYSTEM - CRANK OPERATED

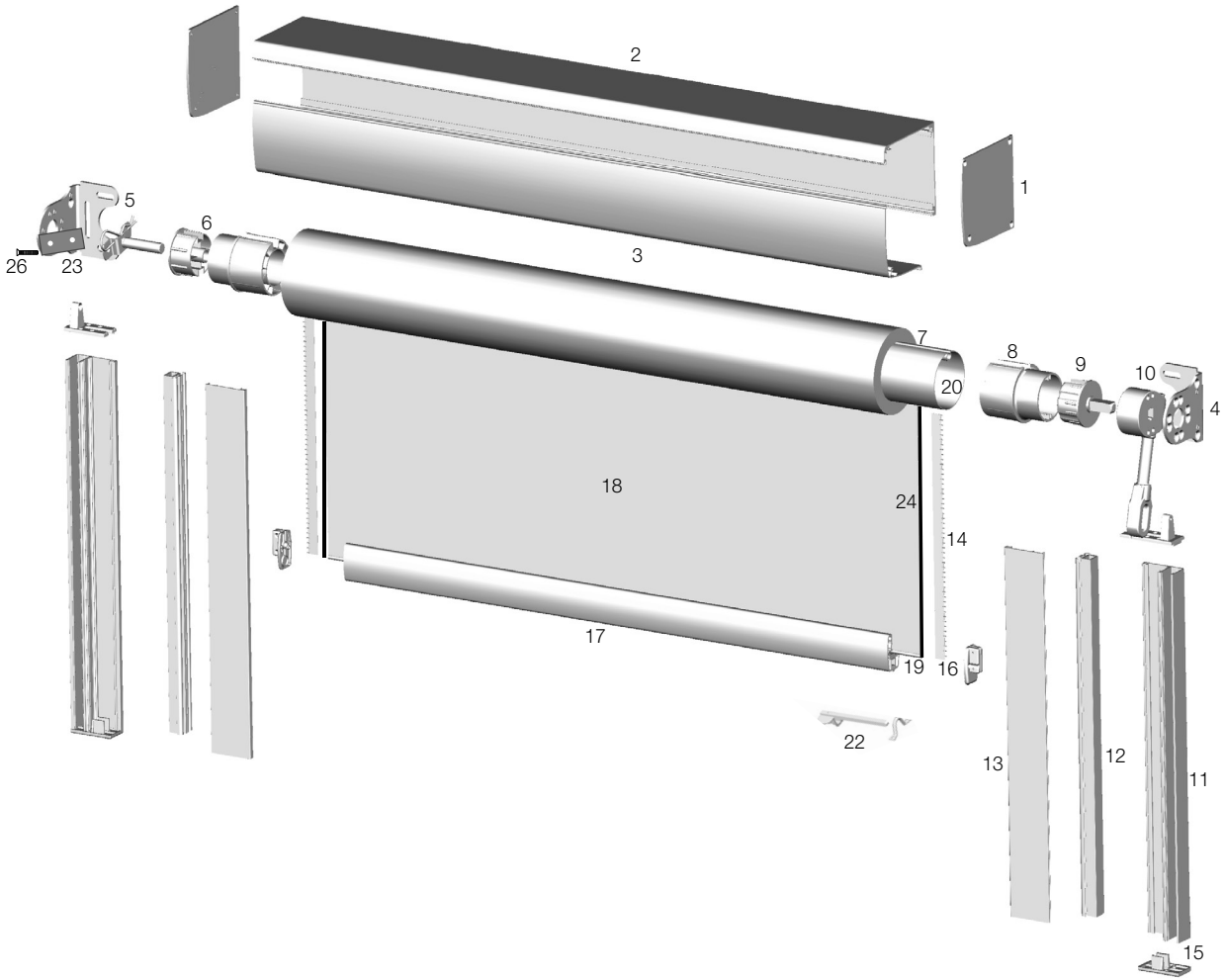

No	Part	Description
1	46.608.XXX	HEADBOX END CAP LH & RH
2	46.005.XXX	HEADBOX BACK PLATE
3	46.012.XXX* 46.013.XXX*	R HEADBOX FRONT COVER (CLOSED) R HEADBOX FRONT COVER (OPEN)
4	46.019.XXX	100MM UNIVERSAL BRACKET
5	46.002.XXX	PIVOT PIN & PLATE
6	46.506.000	60MM IDLE END
7	46.612.500 46.612.700	78MM TUBE 5MT 78MM TUBE 7MT
8	46.306.000	ZS TUBE REDUCER
9	42.603.855 46.505.000	60MM DRIVE END - SMALL 60MM DRIVE END - 13MM SHAFT
10	46.502.XXX	9:1 GEAR
11	46.600.XXX	DC ZS CHANNEL V1
12	46.598.000	ZS FLOATING CHANNEL V1
13	46.601.XXX	DC ZS CHANNEL COVER V1
14	46.599.000	ZIP
15	46.016.000	DC ZS CHANNEL END CAP SET V1
16	46.311.000	ZS BOTTOM RAIL END CAP R V1
17	46.011.XXX	R BOTTOM RAIL
18	44.XXX.XXX	EXTERNAL SCREEN FABRIC
19	44.132.000 42.421.855	4.2MM ES SOLID SPLINE 6MM SPLINE
20	42.198.000 42.421.855	3.5MM HARD SPLINE 6MM SPLINE
22	46.517.000	R BOTTOM RAIL LOCKING PIN
23	46.550.000	BLOCK SPACER
26	46.553.XXX	M6X35MM CSK HD PHIL BOLT

*000 - MILL, 100 -SILVER PEARL, 134-MOMBASA, 734-YALUMBA, 737-CHARDONNAY, 810-THUNDERCLOUD, 850-WHITE SATIN

Hunter Douglas Window Coverings Components PRICE LIST

ALPHA AWNING SERIES COMPONENTRY: SRS V2 SYSTEM - CRANK OPERATED

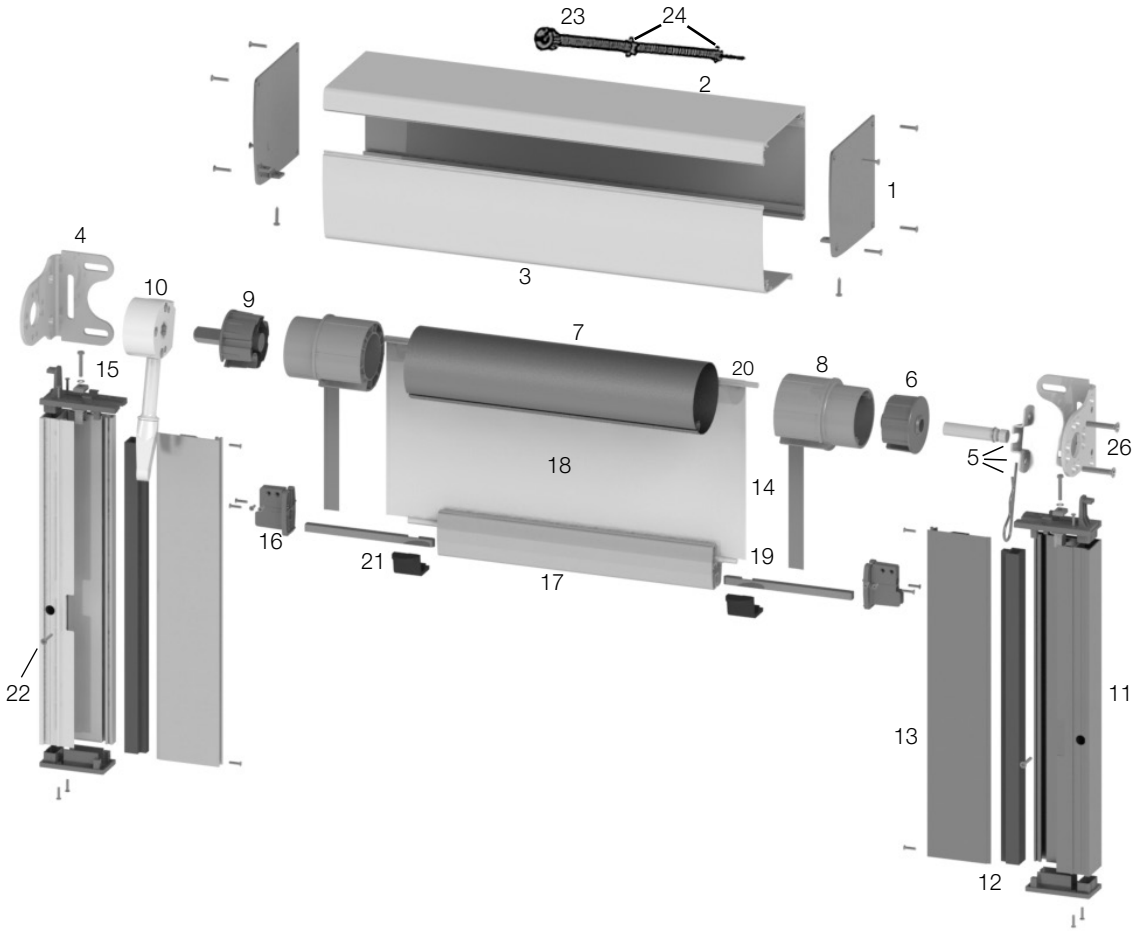

No	Part	Description
1	46.608.XXX*	HEADBOX END CAP LH & RH
2	46.005.XXX*	HEADBOX BACK PLATE
3	46.012.XXX* 46.013.XXX*	R HEADBOX FRONT COVER (CLOSED) R HEADBOX FRONT COVER (OPEN)
4	46.019.000 46.019.063	100MM UNIVERSAL BRACKET Z 100MM UNIVERSAL BRACKET SS
5	46.002.000 46.002.063	PIVOT PIN & PLATE Z PIVOT PIN & PLATE SS
6	46.506.000	60MM IDLE END
7	46.612.500 46.612.700	78MM TUBE 5MT 78MM TUBE 7MT
8	46.306.000	ZS TUBE REDUCER
9	42.603.855 46.505.000	60MM DRIVE END - SMALL 60MM DRIVE END - 13MM SHAFT
10	46.502.100 46.502.122 46.502.837	9:1 GEAR SILVER 9:1 GEAR WHITE (CRANK OPERATION ONLY) 9:1 GEAR BLACK
11	46.606.XXX	DC ZS CHANNEL V2
12	46.610.000	ZS FLOATING CHANNEL V2
13	46.607.XXX	DC ZS CHANNEL COVER V2
14	46.599.000	ZIP
15	46.609.000	DC ZS CHANNEL END CAP SET V2
16	46.611.000	ZS BOTTOM RAIL END CAP R V2
17	46.011.XXX*	R BOTTOM RAIL
18	82.29X.XXX 44.XXX.XXX	CANVAS FABRIC EXTERNAL SCREEN FABRIC
19	44.132.000 42.421.855	4.2MM ES SOLID SPLINE 6MM SPLINE
20	42.198.000 42.421.855	3.5MM HARD SPLINE 6MM SPLINE
21	46.517.000	R BOTTOM RAIL LOCKING PIN
22	45.615.063	SCREW 8G X 25 MUSH SS
23	42.064.000 42.065.000 42.066.000 42.067.000	RUA 60 SPRING ASSY 750MM BARE RUA 60 SPRING ASSY 750MM LIGHT BARE RUA 60 SPRING ASSY 1200MM BARE RUA 60 SPRING ASSY 1800MM BARE (SPRING OPERATION ONLY)
24	42.068.000	SPRING ASSY ADAPTORS

*000 - MILL, 100 -SILVER PEARL, 134-MOMBASA, 734-YALUMBA, 737-CHARDONNAY, 810-THUNDERCLOUD, 850-WHITE SATIN

Hunter Douglas Window Coverings Components PRICE LIST

ALPHA AWNING SERIES COMPONENTRY: PIVOT ARM - CRANK OPERATED

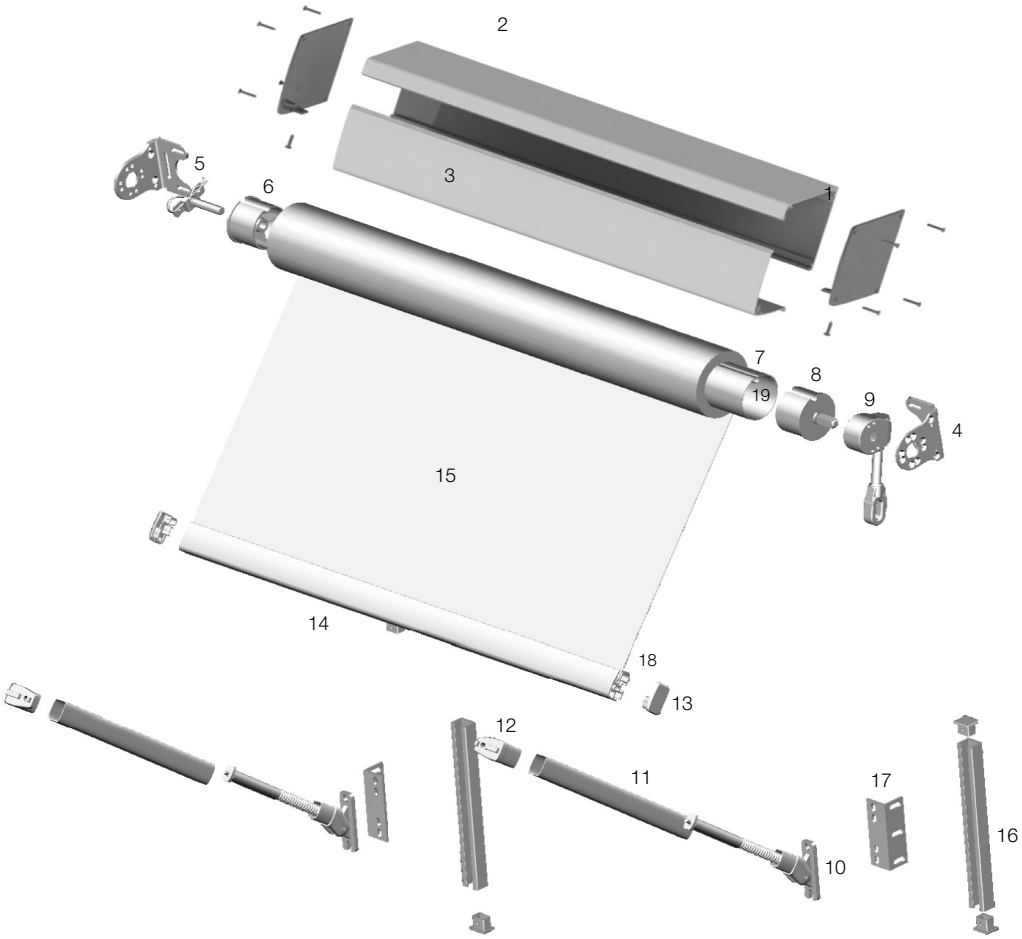

No	Part	Description
1	46.608.XXX	HEADBOX END CAP LH & RH
2	46.005.XXX	HEADBOX BACK PLATE
3	46.012.XXX* 46.013.XXX*	R HEADBOX FRONT COVER (CLOSED) R HEADBOX FRONT COVER (OPEN)
4	46.019.XXX	100MM UNIVERSAL BRACKET
5	46.002.XXX	PIVOT PIN & PLATE
6	46.506.000 44.210.000 46.507.000	60MM IDLE END 70MM IDLER WITH HOLE 78MM IDLE END
7	42.180.049 46.522.500 46.522.700 46.612.500 46.612.700	60MM TUBE 70MM TUBE 5MT 70MM TUBE 7MT 78MM TUBE 5MT 78MM TUBE 7MT
8	42.603.855 44.209.000 46.504.000 46.505.000	60MM DRIVE END - SMALL 70MM DRIVE END 78MM CRANK DRIVE END 60MM DRIVE END - 13MM SHAFT
9	46.502.XXX	9:1 GEAR
10	46.423.100	PA ARM BRACKET WITH SPRING
11	46.421.000	PA ARM PROFILE
12	46.422.030	PA FRONT RAIL CONNECTOR
13	46.420.000	PA FRNT RAIL END CAP
14	46.419.XXX	R PA FRONT RAIL
15	82.29X.XXX 44.XXX.XXX	CANVAS FABRIC EXTERNAL SCREEN FABRIC
16	46.414.000	PA SLIDE RAIL 32X25MM 6M
17	46.416.100	PA ANGLE BRACKET (SIDE FIX)
18	44.132.000 42.421.855	4.2MM ES SOLID SPLINE 6MM SPLINE
19	42.198.000 42.421.855	3.5MM HARD SPLINE 6MM SPLINE

*000 - MILL, 100 -SILVER PEARL, 134-MOMBASA, 734-YALUMBA, 737-CHARDONNAY, 810-THUNDERCLOUD, 850-WHITE SATIN

Hunter Douglas Window Coverings Components PRICE LIST

ALPHA AWNING SERIES COMPONENTRY: OPERATION AND ACCESSORIES

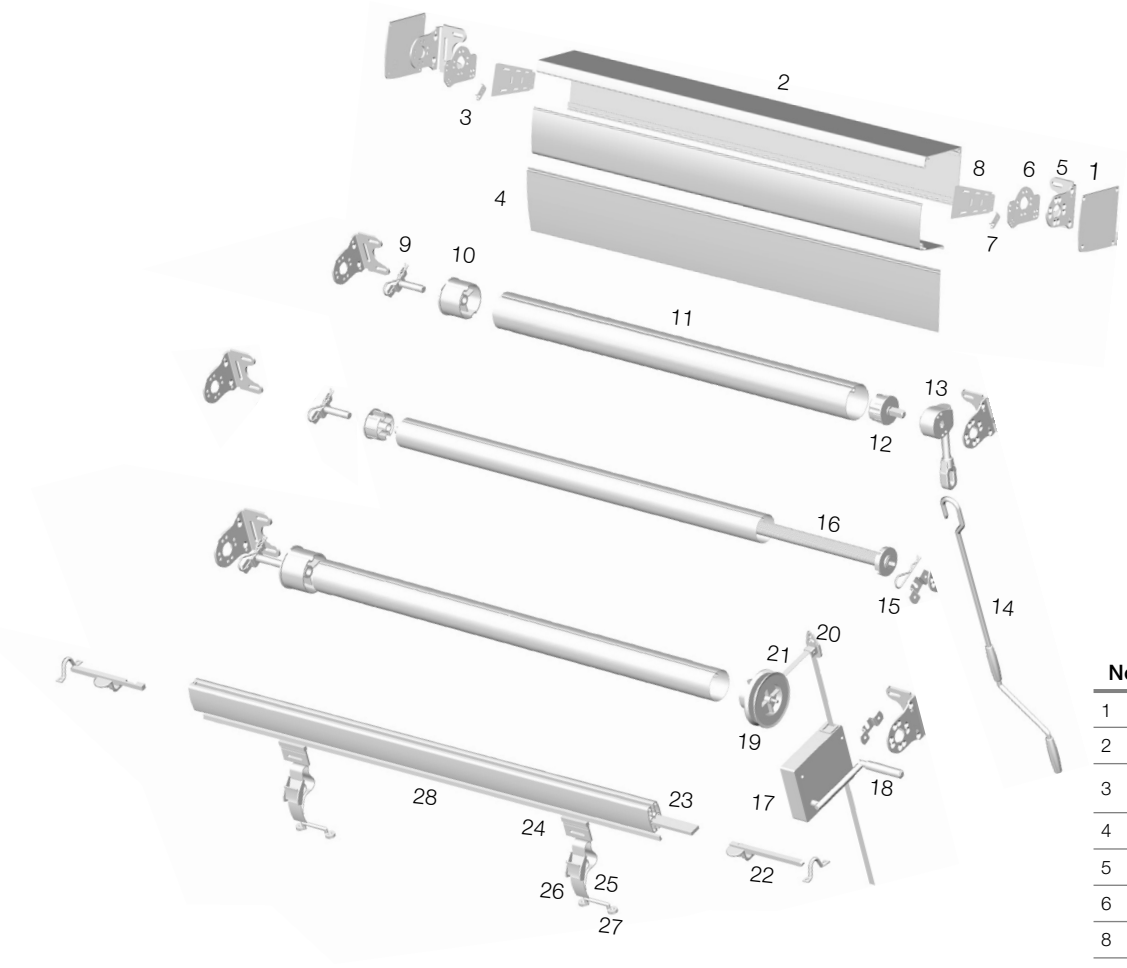

No	Part	Description
1	46.608.XXX	HEADBOX END CAP LH & RH
2	46.005.XXX	HEADBOX BACK PLATE
3	46.012.XXX* 46.013.XXX*	R HEADBOX FRONT COVER (CLOSED) R HEADBOX FRONT COVER (OPEN)
4	46.013.XXX	R PA HEADBOX FRONT
5	46.019.XXX	100MM UNIVERSAL BRACKET
6	46.530.063	EXTENSION PLATE
8	46.510.000	SPREADER PLATE
9	46.002.XXX	PIVOT PIN & PLATE
10	46.506.000 44.210.000 46.507.000	60MM IDLE END 70MM IDLE END 78MM IDLE END

No	Part	Description
11	42.180.049 46.522.500 46.522.700 46.612.500 46.612.700	60MM TUBE 70MM TUBE 5MT 70MM TUBE 7MT 78MM TUBE 5MT 78MM TUBE 7MT
12	42.603.855 44.209.000 46.504.000 46.505.000	60MM DRIVE END – SMALL 70MM DRIVE END 78MM CRANK DRIVE END 60MM DRIVE END – 13MM SHAFT
13	46.502.XXX	9:1 GEAR
14	46.512.000 46.513.000 46.514.000 46.515.000 46.516.000	CRANK ROD 800MM CRANK ROD 1200MM CRANK ROD 1600MM CRANK ROD 2000MM CRANK ROD 2400MM
15	46.518.063	SPRING ADAPTOR PLATE
16	42.057.000 42.058.000 42.063.000 42.056.000	RUA60 SPRING 1200MM RUA60 SPRING 1800MM RUA60 SPRING 450MM RUA60 SPRING 750MM
	42.064.000 42.065.000 42.066.000 42.067.000	RUA 60 SPRING ASSY 750MM BARE RUA 60 SPRING ASSY 750MM LIGHT BARE RUA 60 SPRING ASSY 1200MM BARE RUA 60 SPRING ASSY 1800MM BARE (SPRING OPERATION ONLY)
	42.068.000	SPRING ASSY ADAPTORS
17	42.649.850	S2000 TAPE WINCH
18	42.651.000	S2000TAPE WINCH HANDLE
19	44.131.855	CORD SPOOL
20	42.506.030	SWIVEL TAPE PLATE 275503
21	42.505.000	SWIVEL TAPE GUIDE 275501
22	46.517.000	R BRAIL LOCKING PIN
23	46.021.000	BOTTOM RAIL WEIGHT
24	46.500.000	HOLD DOWN CLIP
25	42.236.000	BUCKLE FOR HOLD DOWN STRAP
26	42.230.000	RUA STRAP
27	42.204.000	BREECHING STAPLE
28	46.203.000	PILE BRUSH

*000 - MILL, 100 -SILVER PEARL, 134-MOMBASA, 734-YALUMBA, 737-CHARDONNAY, 810-THUNDERCLOUD, 850-WHITE SATIN

Hunter Douglas Window Coverings Components PRICE LIST

ALPHA AWNING SERIES COMPONENTRY: LINKING OPTION

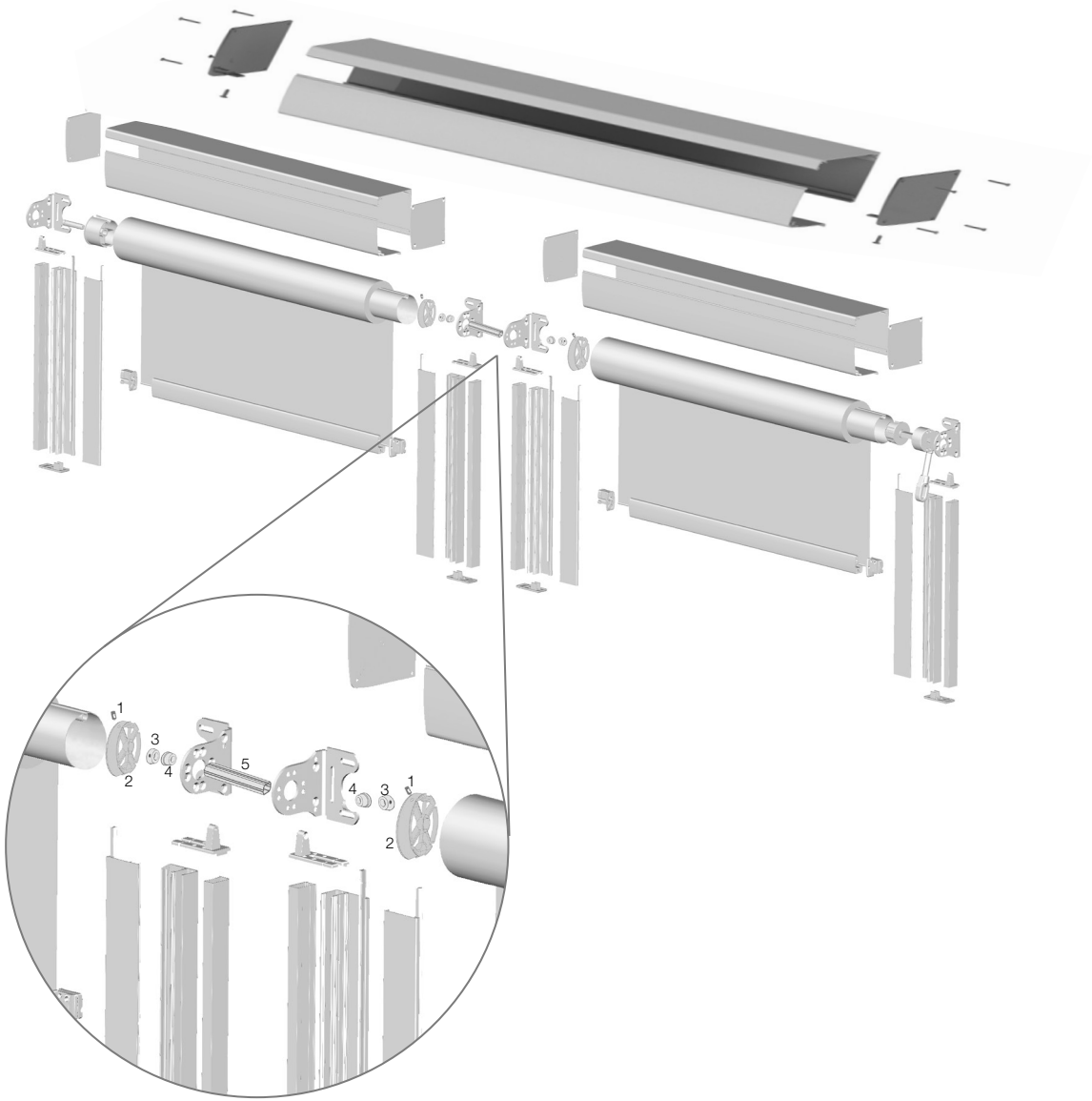

No	Part	Description
1	46.558.000	GRUB SCREW
2	46.556.000 46.557.000	78MM TUBE END SQR CONNECTOR 70MM TUBE END SQR CONNECTOR
3	46.561.000	16MM SHAFT COLLAR
4	46.560.000	BRACKET BUSHING
5	46.559.030	SQR SHAFT LINK CONNECTOR

Hunter Douglas Window Coverings Components PRICE LIST

ALPHA AWNING SERIES COMPONENTRY

PROPRIETARY LINES

	ITEM	DESCRIPTION	COLOUR	QTY	X	UNIT	TOTAL	PACK	PACK PRICE*	UNIT PRICE
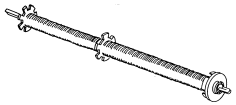	42.056.000	RUA 60 MOTOR ASSEMBLY 750MM	NATURAL	10	X	1	10 EA	CR	$211.71	21.1706
	42.057.000	RUA 60 MOTOR ASSEMBLY 1200MM	NATURAL	10	X	1	10 EA	CR	$296.04	29.6044
	42.058.000	RUA 60 MOTOR ASSEMBLY 1800MM	NATURAL	10	X	1	10 EA	CR	$398.35	39.8352
	42.063.000	RUA60 SPRING ASSY TSR 450MM	NATURAL	10	X	1	10 EA	CR	$212.02	21.2015
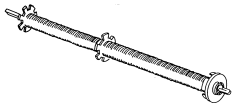	42.064.000	RUA 60 SPRING ASSY 750MM BARE	NATURAL	10	X	1	10 EA	CR	$211.71	21.1706
	42.065.000	RUA 60 SPRING ASSY 750MM LIGHT BARE	NATURAL	10	X	1	10 EA	CR	$211.71	21.1706
	42.066.000	RUA 60 SPRING ASSY 1200MM BARE	NATURAL	10	X	1	10 EA	CR	$296.04	29.6044
	42.067.000	RUA 60 SPRING ASSY 1800MM BARE	NATURAL	10	X	1	10 EA	CR	$398.35	39.8352
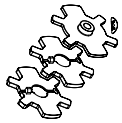	42.068.000	SPRING ASSY ADAPTORS (78mm)	BLACK	10	X	1	10 EA	CR	$65.52	6.5516
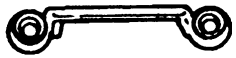	42.204.000	RUA BREECHING STAPLE	ZINC	100	X	1	100 EA	CR	$213.79	2.1379
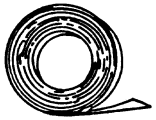	42.230.000	RUA STRAP	BLACK	20	X	1	20 MT	CR	$36.04	1.8021
	42.236.000	RUA BUCKLE FOR HOLD DOWN STRAP	MILL	100	X	1	100 EA	CR	$395.54	3.9554
	42.421.855	POLY-ABS SPLINE TUBE 6mm		50	X	6MT	300 MT	CR	$167.43	0.5581
	42.198.000	3.5MM HARD SPLINE		1	X	500MT	500 MT	RL	$280.65	0.5613
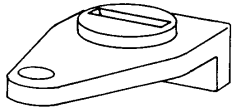	42.501.855	TAPE GUIDE 275555	GREY	1	X	1	1 EA	EA	$0.30	0.3005

* These prices are listed EXCLUSIVE of GST. GST of 10% is applicable to all items. # Use Away - Limited Stock.
A $40.00 surcharge will apply to all orders received with a value less than $300.00 except where those orders are placed on HD live which will attract a surcharge of $20.00. 6/19

Hunter Douglas Window Coverings Components PRICE LIST

ALPHA AWNING SERIES COMPONENTRY

PROPRIETARY LINES

	ITEM	DESCRIPTION	COLOUR	QTY	X	UNIT	TOTAL	PACK	PACK PRICE*	UNIT PRICE
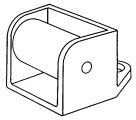	42.505.000	SWIVEL TAPE GUIDE 275501	GREY	1	X	1	1 EA	EA	$1.95	1.9474
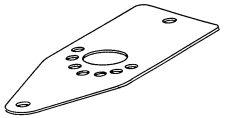	42.506.030	SWIVEL TAPE PLATE 275503	GREY	1	X	1	1 EA	EA	$0.71	0.7057
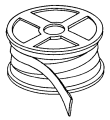	42.512.000	LIFT TAPE 150 575128	GREY	1	X	150MT	150 MT	RL	$125.52	0.8368
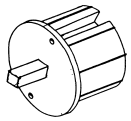	42.649.850	S2000 TAPE WINCH	WHITE	20	X	1	20 EA	CR	$1,231.46	61.5729
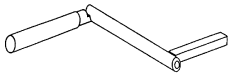	42.651.000	S2000 TAPE WINCH HANDLE	ZINC	20	X	1	20 EA	CR	$348.12	17.4059
	44.131.855	CORD SPOOL	GREY	5	X	1	5 EA	BC	$110.17	22.0346
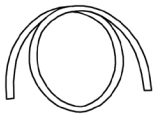	44.132.000	ES SOLID SPLINE 4.2MM		1	X	500MT	500 MT	RL	$347.35	0.6947
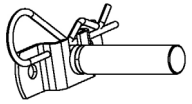	46.002.000 46.002.063	PIVOT PIN & PLATE PIVOT PIN & PLATE	ZINC STAINLESS STEEL	20 20	X X	1 1	20 ST 20 ST	CR CR	$68.23 $96.55	3.4116 4.8273

* These prices are listed EXCLUSIVE of GST. GST of 10% is applicable to all items. # Use Away - Limited Stock.
A $40.00 surcharge will apply to all orders received with a value less than $300.00 except where those orders are placed on HD live which will attract a surcharge of $20.00. 6/19

Hunter Douglas Window Coverings Components PRICE LIST

ALPHA AWNING SERIES COMPONENTRY

PROPRIETARY LINES

	ITEM	DESCRIPTION	COLOUR	QTY	X	UNIT	TOTAL	PACK	PACK PRICE*	UNIT PRICE
	46.004.000	HBOX BACK PLATE 4MT	MILL	4	X	4.0MT	16 MT	CR	$554.64	34.665
	46.004.100	HBOX BACK PLATE 4MT	SILVER PEARL	4	X	4.0MT	16 MT	CR	$586.22	36.6385
	46.004.134	HBOX BACK PLATE 4MT	MOMBASA	4	X	4.0MT	16 MT	CR	$586.22	36.6385
	46.004.734	HBOX BACK PLATE 4MT	YALUMBA	4	X	4.0MT	16 MT	CR	$586.22	36.6385
	46.004.737	HBOX BACK PLATE 4MT	CHARDONNAY	4	X	4.0MT	16 MT	CR	$586.22	36.6385
	46.004.810	HBOX BACK PLATE 4MT	THUNDERCLOUD	4	X	4.0MT	16 MT	CR	$586.22	36.6385
	46.005.000	HBOX BACK PLATE 5.8MT	MILL	4	X	5.8MT	23.2 MT	CR	$804.23	34.665
	46.005.100	HBOX BACK PLATE 5.8MT	SILVER PEARL	4	X	5.8MT	23.2 MT	CR	$850.01	36.6385
	46.005.134	HBOX BACK PLATE 5.8MT	MOMBASA	4	X	5.8MT	23.2 MT	CR	$850.01	36.6385
	46.005.734	HBOX BACK PLATE 5.8MT	YALUMBA	4	X	5.8MT	23.2 MT	CR	$850.01	36.6385
	46.005.737	HBOX BACK PLATE 5.8MT	CHARDONNAY	4	X	5.8MT	23.2 MT	CR	$850.01	36.6385
	46.005.810	HBOX BACK PLATE 5.8MT	THUNDERCLOUD	4	X	5.8MT	23.2 MT	CR	$850.01	36.6385
	46.005.850	HBOX BACK PLATE 5.8MT	WHITE SATIN	4	X	5.8MT	23.2 MT	CR	$850.01	36.6385
	46.602.000	R BOTTOM RAIL 4MT	MILL	4	X	4MT	16 MT	CR	$276.14	17.2585
	46.602.100	R BOTTOM RAIL 4MT	SILVER PEARL	4	X	4MT	16 MT	CR	$440.71	27.5442
	46.602.134	R BOTTOM RAIL 4MT	MOMBASA	4	X	4MT	16 MT	CR	$440.71	27.5442
	46.602.734	R BOTTOM RAIL 4MT	YALUMBA	4	X	4MT	16 MT	CR	$440.71	27.5442
	46.602.737	R BOTTOM RAIL 4MT	CHARDONNAY	4	X	4MT	16 MT	CR	$440.71	27.5442
	46.602.810	R BOTTOM RAIL 4MT	THUNDERCLOUD	4	X	4MT	16 MT	CR	$440.71	27.5442
	46.011.000	R BOTTOM RAIL 5.8MT	MILL	4	X	5.8MT	23.2 MT	CR	$400.39	17.2584
	46.011.100	R BOTTOM RAIL 5.8MT	SILVER PEARL	4	X	5.8MT	23.2 MT	CR	$639.03	27.5442
	46.011.134	R BOTTOM RAIL 5.8MT	MOMBASA	4	X	5.8MT	23.2 MT	CR	$639.03	27.5442
	46.011.734	R BOTTOM RAIL 5.8MT	YALUMBA	4	X	5.8MT	23.2 MT	CR	$639.03	27.5442
	46.011.737	R BOTTOM RAIL 5.8MT	CHARDONNAY	4	X	5.8MT	23.2 MT	CR	$639.03	27.5442
	46.011.810	R BOTTOM RAIL 5.8MT	THUNDERCLOUD	4	X	5.8MT	23.2 MT	CR	$639.03	27.5442
	46.011.850	R BOTTOM RAIL 5.8MT	WHITE SATIN	4	X	5.8MT	23.2 MT	CR	$639.03	27.5442
	46.603.000	HBOX FRONT COVER ENCL 4MT	MILL	4	X	4MT	16 MT	CR	$214.98	13.4362
	46.603.100	HBOX FRONT COVER ENCL 4MT	SILVER PEARL	4	X	4MT	16 MT	CR	$336.18	21.0112
	46.603.134	HBOX FRONT COVER ENCL 4MT	MOMBASA	4	X	4MT	16 MT	CR	$336.18	21.0112
	46.603.734	HBOX FRONT COVER ENCL 4MT	YALUMBA	4	X	4MT	16 MT	CR	$336.18	21.0112
	46.603.737	HBOX FRONT COVER ENCL 4MT	CHARDONNAY	4	X	4MT	16 MT	CR	$336.18	21.0112
	46.603.810	HBOX FRONT COVER ENCL 4MT	THUNDERCLOUD	4	X	4MT	16 MT	CR	$336.18	21.0112
	46.012.000	R HBOX FRONT COVER ENCL 5.8M	MILL	4	X	5.8MT	23.2 MT	CR	$311.72	13.4362
	46.012.100	R HBOX FRONT COVER ENCL 5.8M	SILVER PEARL	4	X	5.8MT	23.2 MT	CR	$487.46	21.0112
	46.012.134	R HBOX FRONT COVER ENCL 5.8M	MOMBASA	4	X	5.8MT	23.2 MT	CR	$487.46	21.0112
	46.012.734	R HBOX FRONT COVER ENCL 5.8M	YALUMBA	4	X	5.8MT	23.2 MT	CR	$487.46	21.0112
	46.012.737	R HBOX FRONT COVER ENCL 5.8M	CHARDONNAY	4	X	5.8MT	23.2 MT	CR	$487.46	21.0112
	46.012.810	R HBOX FRONT COVER ENCL 5.8M	THUNDERCLOUD	4	X	5.8MT	23.2 MT	CR	$487.46	21.0112
	46.012.850	R HBOX FRONT COVER ENCL 5.8M	WHITE SATIN	4	X	5.8MT	23.2 MT	CR	$487.46	21.0112

* These prices are listed EXCLUSIVE of GST. GST of 10% is applicable to all items. # Use Away - Limited Stock.
A $40.00 surcharge will apply to all orders received with a value less than $300.00 except where those orders are placed on HD live which will attract a surcharge of $20.00. 6/19

Hunter Douglas Window Coverings Components PRICE LIST

ALPHA AWNING SERIES COMPONENTRY

PROPRIETARY LINES

	ITEM	DESCRIPTION	COLOUR	QTY	X	UNIT	TOTAL	PACK	PACK PRICE*	UNIT PRICE
	46.604.000	R HBOX FRONT COVER OPEN 4M	MILL	4	X	4MT	16 MT	CR	$102.24	6.3898
	46.604.100	R HBOX FRONT COVER OPEN 4M	SILVER PEARL	4	X	4MT	16 MT	CR	$159.62	9.9761
	46.604.134	R HBOX FRONT COVER OPEN 4M	MOMBASA	4	X	4MT	16 MT	CR	$159.62	9.9761
	46.604.734	R HBOX FRONT COVER OPEN 4M	YALUMBA	4	X	4MT	16 MT	CR	$159.62	9.9761
	46.604.737	R HBOX FRONT COVER OPEN 4M	CHARDONNAY	4	X	4MT	16 MT	CR	$159.62	9.9761
	46.604.810	R HBOX FRONT COVER OPEN 4M	THUNDERCLOUD	4	X	4MT	16 MT	CR	$159.62	9.9761
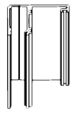	46.013.000	R PA HBOX FRONT COVER OPEN 5.8M	MILL	4	X	5.8MT	23.2 MT	CR	$148.24	6.3898
	46.013.100	R PA HBOX FRONT COVER OPEN 5.8M	SILVER PEARL	4	X	5.8MT	23.2 MT	CR	$231.45	9.9761
	46.013.134	R PA HBOX FRONT COVER OPEN 5.8M	MOMBASA	4	X	5.8MT	23.2 MT	CR	$231.45	9.9761
	46.013.734	R PA HBOX FRONT COVER OPEN 5.8M	YALUMBA	4	X	5.8MT	23.2 MT	CR	$231.45	9.9761
	46.013.737	R PA HBOX FRONT COVER OPEN 5.8M	CHARDONNAY	4	X	5.8MT	23.2 MT	CR	$231.45	9.9761
	46.013.810	R PA HBOX FRONT COVER OPEN 5.8M	THUNDERCLOUD	4	X	5.8MT	23.2 MT	CR	$231.45	9.9761
	46.013.850	R PA HBOX FRONT COVER OPEN 5.8M	WHITE SATIN	4	X	5.8MT	23.2 MT	CR	$231.45	9.9761
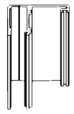	46.600.000	DC ZS CHANNEL SRS V1	MILL	4	X	5.8MT	23.2 MT	CR	$277.26	11.9508
	46.600.100	DC ZS CHANNEL SRS V1	SILVER PEARL	4	X	5.8MT	23.2 MT	CR	$409.55	17.6532
	46.600.134	DC ZS CHANNEL SRS V1	MOMBASA	4	X	5.8MT	23.2 MT	CR	$409.55	17.6532
	46.600.734	DC ZS CHANNEL SRS V1	YALUMBA	4	X	5.8MT	23.2 MT	CR	$409.55	17.6532
	46.600.737	DC ZS CHANNEL SRS V1	CHARDONNAY	4	X	5.8MT	23.2 MT	CR	$409.55	17.6532
	46.600.810	DC ZS CHANNEL SRS V1	THUNDERCLOUD	4	X	5.8MT	23.2 MT	CR	$409.55	17.6532
	46.600.850	DC ZS CHANNEL SRS V1	WHITE SATIN	4	X	5.8MT	23.2 MT	CR	$409.55	17.6532
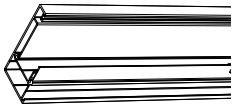	46.606.000	DC ZS CHANNEL SRS V2	MILL	4	X	5.8MT	23.2 MT	CR	$328.94	14.1783
	46.606.100	DC ZS CHANNEL SRS V2	SILVER PEARL	4	X	5.8MT	23.2 MT	CR	$409.55	17.6532
	46.606.134	DC ZS CHANNEL SRS V2	MOMBASA	4	X	5.8MT	23.2 MT	CR	$409.55	17.6532
	46.606.734	DC ZS CHANNEL SRS V2	YALUMBA	4	X	5.8MT	23.2 MT	CR	$409.55	17.6532
	46.606.737	DC ZS CHANNEL SRS V2	CHARDONNAY	4	X	5.8MT	23.2 MT	CR	$409.55	17.6532
	46.606.810	DC ZS CHANNEL SRS V2	THUNDERCLOUD	4	X	5.8MT	23.2 MT	CR	$409.55	17.6532
	46.606.850	DC ZS CHANNEL SRS V2	WHITE SATIN	4	X	5.8MT	23.2 MT	CR	$409.55	17.6532
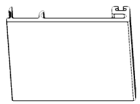	46.601.000	DC ZS CHANNEL COVER SRS V1	MILL	4	X	5.8MT	23.2 MT	CR	$136.69	5.8919
	46.601.100	DC ZS CHANNEL COVER SRS V1	SILVER PEARL	4	X	5.8MT	23.2 MT	CR	$212.14	9.1441
	46.601.134	DC ZS CHANNEL COVER SRS V1	MOMBASA	4	X	5.8MT	23.2 MT	CR	$212.14	9.1441
	46.601.734	DC ZS CHANNEL COVER SRS V1	YALUMBA	4	X	5.8MT	23.2 MT	CR	$212.14	9.1441
	46.601.737	DC ZS CHANNEL COVER SRS V1	CHARDONNAY	4	X	5.8MT	23.2 MT	CR	$212.14	9.1441
	46.601.810	DC ZS CHANNEL COVER SRS V1	THUNDERCLOUD	4	X	5.8MT	23.2 MT	CR	$212.14	9.1441
	46.601.850	DC ZS CHANNEL COVER SRS V1	WHITE SATIN	4	X	5.8MT	23.2 MT	CR	$212.14	9.1441

* These prices are listed EXCLUSIVE of GST. GST of 10% is applicable to all items. # Use Away - Limited Stock.
A $40.00 surcharge will apply to all orders received with a value less than $300.00 except where those orders are placed on HD live which will attract a surcharge of $20.00. 6/19

Hunter Douglas Window Coverings Components PRICE LIST

ALPHA AWNING SERIES COMPONENTRY

PROPRIETARY LINES

	ITEM	DESCRIPTION	COLOUR	QTY	X	UNIT	TOTAL	PACK	PACK PRICE*	UNIT PRICE
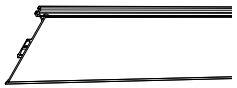	46.607.000	DC ZS CHANNEL COVER SRS V2	MILL	4	X	5.8MT	23.2 MT	CR	$136.69	$5.8919
	46.607.100	DC ZS CHANNEL COVER SRS V2	SILVER PEARL	4	X	5.8MT	23.2 MT	CR	$212.14	$9.1441
	46.607.134	DC ZS CHANNEL COVER SRS V2	MOMBASA	4	X	5.8MT	23.2 MT	CR	$212.14	$9.1441
	46.607.734	DC ZS CHANNEL COVER SRS V2	YALUMBA	4	X	5.8MT	23.2 MT	CR	$212.14	$9.1441
	46.607.737	DC ZS CHANNEL COVER SRS V2	CHARDONNAY	4	X	5.8MT	23.2 MT	CR	$212.14	$9.1441
	46.607.810	DC ZS CHANNEL COVER SRS V2	THUNDERCLOUD	4	X	5.8MT	23.2 MT	CR	$212.14	$9.1441
	46.607.850	DC ZS CHANNEL COVER SRS V2	WHITE SATIN	4	X	5.8MT	23.2 MT	CR	$212.14	$9.1441
	46.016.000	CHANNEL END CAP SET BLK SRS V1	BLACK PLASTIC	20	X	1	20 ST	PK	$218.87	$10.9436
	46.609.000	CHANNEL END CAP SET BLK SRS V2	BLACK PLASTIC	20	X	1	20 ST	PK	$218.87	$10.9436
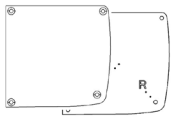	46.608.000	HBOX END CAP LH & RH	MILL	20	X	1	20 EA	PK	$229.44	$11.4718
	46.608.100	HBOX END CAP LH & RH	SILVER PEARL	20	X	1	20 EA	PK	$245.03	$12.2514
	46.608.134	HBOX END CAP LH & RH	MOMBASA	20	X	1	20 EA	PK	$245.03	$12.2514
	46.608.734	HBOX END CAP LH & RH	YALUMBA	20	X	1	20 EA	PK	$245.03	$12.2514
	46.608.737	HBOX END CAP LH & RH	CHARDONNAY	20	X	1	20 EA	PK	$245.03	$12.2514
	46.608.810	HBOX END CAP LH & RH	THUNDERCLOUD	20	X	1	20 EA	PK	$245.03	$12.2514
	46.608.850	HBOX END CAP LH & RH	WHITE SATIN	20	X	1	20 EA	PK	$245.03	$12.2514
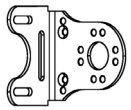	46.019.000	100MM UNI BRACKET	ZINC	20	X	1	20 EA	PK	$212.34	$10.6168
	46.019.063	100MM UNI BRACKET	STAINLESS STEEL	20	X	1	20 EA	PK	$382.21	$19.1104
	46.020.000	DEEP CHANNEL SPACER	MILL	4	X	5.8MT	23.2 MT	PK	$292.73	$12.6177
	46.020.100	DEEP CHANNEL SPACER	SILVER PEARL	4	X	5.8MT	23.2 MT	PK	$353.36	$15.2312
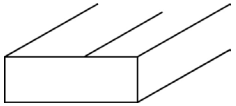	46.021.000	BOTTOM RAIL WEIGHT	NATURAL	8	X	1	8 EA	PK	$346.60	$43.3250
	46.025.000	SLIDE RAIL ARM SET	NATURAL	40	X	1	40 EA	CR	$2,827.12	$70.6780

* These prices are listed EXCLUSIVE of GST. GST of 10% is applicable to all items. # Use Away - Limited Stock.
A $40.00 surcharge will apply to all orders received with a value less than $300.00 except where those orders are placed on HD live which will attract a surcharge of $20.00. 6/19

Hunter Douglas Window Coverings Components PRICE LIST

ALPHA AWNING SERIES COMPONENTRY

PROPRIETARY LINES

	ITEM	DESCRIPTION	COLOUR	QTY	X	UNIT	TOTAL	PACK	PACK PRICE*	UNIT PRICE
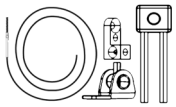	46.108.063	CG CABLE GUIDE SET	STAINLESS STEEL	8	X	1	8 ST	PK	$753.91	$94.2382
	46.203.000	PILE BRUSH 1MT	GREY	1	X	100MT	100 MT	CR	$378.78	$3.7878
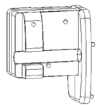	46.205.000	DC BRAIL END CAP	BLACK	20	X	1	20 PR	PK	$60.44	$3.0219
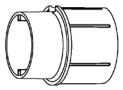	46.306.000	ZS TUBE REDUCER	BLACK	20	X	1	20 EA	CR	$54.02	$2.7011
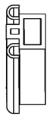	46.598.000	ZS FLOATING CHANNEL SRS V1	BLACK	8	X	5.8MT	46.4 MT	CR	$634.73	$13.6795
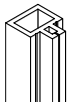	46.610.000	ZS FLOATING CHANNEL SRS V2	BLACK	8	X	5.8MT	46.4 MT	CR	$634.73	$13.6795
	46.311.000	ZS BOTTOM RAIL END CAP SRS V1	BLACK	20	X	1	20 PR	PK	$45.74	$2.2868
	46.611.000	ZS BOTTOM RAIL END CAP SRS V2	BLACK	20	X	1	20 PR	PK	$60.44	$3.0219
	46.599.000	ZIP SMALL	BLACK	1	X	50MT	50 MT	CR	$367.48	$7.3496

* These prices are listed EXCLUSIVE of GST. GST of 10% is applicable to all items. # Use Away - Limited Stock.
A $40.00 surcharge will apply to all orders received with a value less than $300.00 except where those orders are placed on HD live which will attract a surcharge of $20.00. 6/19

Hunter Douglas Window Coverings Components PRICE LIST

ALPHA AWNING SERIES COMPONENTRY

PROPRIETARY LINES

	ITEM	DESCRIPTION	COLOUR	QTY	X	UNIT	TOTAL	PACK	PACK PRICE*	UNIT PRICE
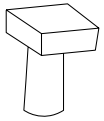	6610350000	PA T SLOT BOLT M8 X 18 PA FLANGE	STAINLESS STEEL	100	X	1	100 EA	CR	$134.22	$1.3422
	6611510000	NUT M8	STAINLESS STEEL	100	X	1	100 EA	CR	$43.45	$0.4345
	46.422.030	PA FRONT RAIL CONNECTOR	SILVER	10	X	1	10 EA	CR	$109.66	$10.9657
	46.421.000	PA ARM PROFILE 6MT	ANODISED	10	X	6MT	60 MT	CR	$1,096.57	$18.2762
	46.423.100	PA ARM BRKT WITH SPRING	ANODISED	25	X	1	25 ST	CR	$803.82	$32.1527
	46.423.134	ARM FITTINGS AND SPRG KIT BLK	BLACK	25	x	1	25 ST	CR	$803.82	$32.1527
	46.423.850	ARM FITTINGS AND SPRG KIT WHT	WHITE	25	x	1	25 ST	CR	$803.82	$32.1527
	46.410.063	PA WASHER 8.4X16X1.5	STAINLESS STEEL	100	X	1	100 EA	CR	$7.27	$0.0727
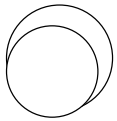	7124130182	PA COVER CAP	SILVER	100	X	1	100 EA	CR	$181.86	$1.8186
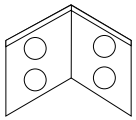	46.425.100	PA ANGLE BRACKET(SIDE FIX)	SILVER	10	X	1	10 EA	CR	$129.79	$12.9792
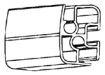	46.419.000	R PA FRONT RAIL R PA FRONT RAIL	MILL	4	X	5.8MT	23.2 MT	CR	$380.46	$16.3991
	46.419.100	R PA FRONT RAIL R PA FRONT RAIL	SILVER PEARL	4	X	5.8MT	23.2 MT	CR	$606.59	$26.1461

* These prices are listed EXCLUSIVE of GST. GST of 10% is applicable to all items. # Use Away - Limited Stock.
A $40.00 surcharge will apply to all orders received with a value less than $300.00 except where those orders are placed on HD live which will attract a surcharge of $20.00. 6/19

Hunter Douglas Window Coverings Components PRICE LIST

ALPHA AWNING SERIES COMPONENTRY

PROPRIETARY LINES

	ITEM	DESCRIPTION	COLOUR	QTY	X	UNIT	TOTAL	PACK	PACK PRICE*	UNIT PRICE
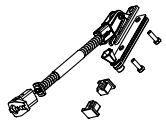	46.424.100	SLIDE RAIL SET SILVER	SILVER	10	X	1	10 EA	CR	$613.79	$61.3793
	46.424.850	SLIDE RAIL SET WHITE	WHITE	10	X	1	10 EA	CR	$613.79	$61.3793
	46.420.000	PA FRNT RAIL END CAP	BLACK	20	X	1	20 PR	CR	$71.87	$3.5934
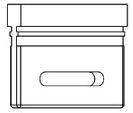	46.500.000	ES HOLD DOWN CLIP - MDFD	BLACK	20	X	1	20 EA	CR	$15.68	$0.7842
	46.524.000	R PLAIN BTTM RAIL END CAP	BLACK	20	X	1	20 PR	PK	$45.74	$2.2868
	46.502.100	9:1 GEAR	SILVER	20	X	1	20 EA	CR	$666.35	$33.3177
	46.502.122	9:1 GEAR	WHITE	20	X	1	20 EA	CR	$666.35	$33.3177
	46.502.837	9:1 GEAR	BLACK	20	X	1	20 EA	CR	$666.35	$33.3177
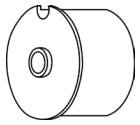	44.209.000	70MM DRIVE END	BLACK	25	X	1	25 EA	CR	$121.94	$4.8774
	46.504.000	78MM CRANK DRIVE END	BLACK	20	X	1	20 EA	CR	$94.10	$4.7049
	46.505.000	60MM DRIVE END - 13MM SHAFT	BLACK	20	X	1	20 EA	CR	$60.97	$3.0487
	44.210.000	70MM IDLER WITH HOLE	BLACK	25	X	1	25 EA	CR	$54.96	$2.1984
	46.506.000	60MM IDLE END BLACK	BLACK	20	X	1	20 EA	CR	$21.78	$1.0891
	46.507.000	78MM IDLE END BLACK	BLACK	20	X	1	20 EA	CR	$59.25	$2.9625
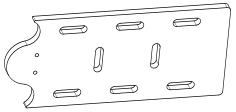	46.510.000	SPREADER PLATE SET ZINC	ZINC	10	X	1	10 ST	CR	$84.08	$8.4080

* These prices are listed EXCLUSIVE of GST. GST of 10% is applicable to all items. # Use Away - Limited Stock.
A $40.00 surcharge will apply to all orders received with a value less than $300.00 except where those orders are placed on HD live which will attract a surcharge of $20.00. 6/19

Hunter Douglas Window Coverings Components PRICE LIST

ALPHA AWNING SERIES COMPONENTRY

PROPRIETARY LINES

	ITEM	DESCRIPTION	COLOUR	QTY	X	UNIT	TOTAL	PACK	PACK PRICE*	UNIT PRICE
	46.512.000	CRANK ROD 800MM ZINC	ZINC	10	X	1	10 EA	CR	$196.07	$19.6070
	46.513.000	CRANK ROD 1200MM ZINC	ZINC	10	X	1	10 EA	CR	$196.07	$19.6071
	46.514.000	CRANK ROD 1600MM ZINC	ZINC	10	X	1	10 EA	CR	$212.05	$21.2050
	46.515.000	CRANK ROD 2000MM ZINC	ZINC	10	X	1	10 EA	CR	$240.32	$24.0324
	46.516.000	CRANK ROD 2400MM ZINC	ZINC	10	X	1	10 EA	CR	$421.37	$42.1372
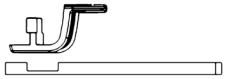	46.517.000	R BRAIL LOCKING PIN BLK & S/ST	PLASTIC / STAINLESS	20	X	1	20 ST	PK	$200.90	$10.0452
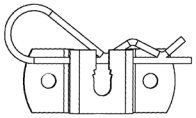	46.518.063	SPRING ADAPTOR PLATE NATURAL	STAINLESS STEEL	20	X	1	20 ST	PK	$67.78	$3.3892
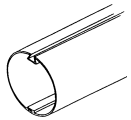	42.180.049	RA60 KEYWAY TUBE 6.5M	STEEL	5	X	6.5MT	5 EA	CR	$225.07	$45.0130
	42.184.049	RA60 KEYWAY TUBE 6.5M BULK	STEEL	120	X	6.5MT	120 EA	SL	$4,899.37	$40.8281
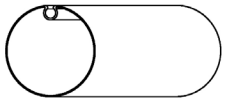	46.612.500	78MM TUBE 5M STEEL	STEEL	4	X	5MT	20 MT	CR	$596.46	$29.8230
	46.612.700	78MM TUBE 7M STEEL	STEEL	4	X	7MT	28 MT	CR	$835.04	$29.8230
	46.522.500	70MM STEEL TUBE - 5M	STEEL	4	X	5MT	20 MT	CR	$404.86	$20.2429
	46.522.700	70MM STEEL TUBE - 7M	STEEL	4	X	7MT	28 MT	CR	$566.80	$20.2429
	46.614.500	78MM TUBE 5M STEEL - BULK	STEEL	46	X	5MT	230 MT	CR	$4,954.43	$21.5410
	46.614.700	78MM TUBE 7M STEEL - BULK	STEEL	46	X	7MT	322 MT	CR	$6,936.20	$21.5410
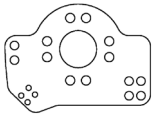	46.530.063	EXTENSION PLATE	STAINLESS STEEL	4	X	1	4 EA	PK	$20.09	$5.0226
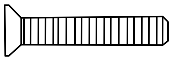	46.553.030	M6X35MM CSK HD PHIL BOLT	ZINC	40	X	1	40 EA	BC	$20.08	$0.5021
	46.553.063	M6X35MM CSK HD PHIL BOLT	STAINLESS STEEL	20	X	1	20 EA	BC	$12.62	$0.6309

* These prices are listed EXCLUSIVE of GST. GST of 10% is applicable to all items. # Use Away - Limited Stock.
A $40.00 surcharge will apply to all orders received with a value less than $300.00 except where those orders are placed on HD live which will attract a surcharge of $20.00. 6/19

Hunter Douglas Window Coverings Components PRICE LIST

ALPHA AWNING SERIES COMPONENTRY

PROPRIETARY LINES

	ITEM	DESCRIPTION	COLOUR	QTY	X	UNIT	TOTAL	PACK	PACK PRICE*	UNIT PRICE
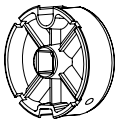	46.556.000	78MM TUBE END SQR CNCTR	STEEL STEEL	10	X	1	10 EA	PK	$153.28	$15.3279
	46.557.000	70MM TUBE END SQR CNCTR	STEEL STEEL	16	X	1	16 EA	PK	$155.40	$9.7122
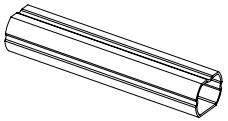	46.559.030	SQR SHAFT LINK CNCTR	ZINC	1	X	1	1 EA	EA	$24.45	$24.4456
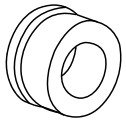	46.560.000	BRACKET BUSHING	WHITE	20	X	1	20 EA	PK	$50.21	$2.5107
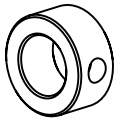	46.561.000	SHAFT COLLAR	NATURAL	10	X	1	10 EA	PK	$66.07	$6.6069
	46.613.063	HANDLE LITERISE	STAINLESS STEEL	50	X	1	50 EA	CR	$272.99	$5.4597
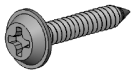	46.615.063	SCREW 8G X 25 MUSHROOM PH	STAINLESS STEEL	500	X	1	500 EA	CR	$115.00	$0.2300

* These prices are listed EXCLUSIVE of GST. GST of 10% is applicable to all items. # Use Away - Limited Stock.
A $40.00 surcharge will apply to all orders received with a value less than $300.00 except where those orders are placed on HD live which will attract a surcharge of $20.00. 11/19