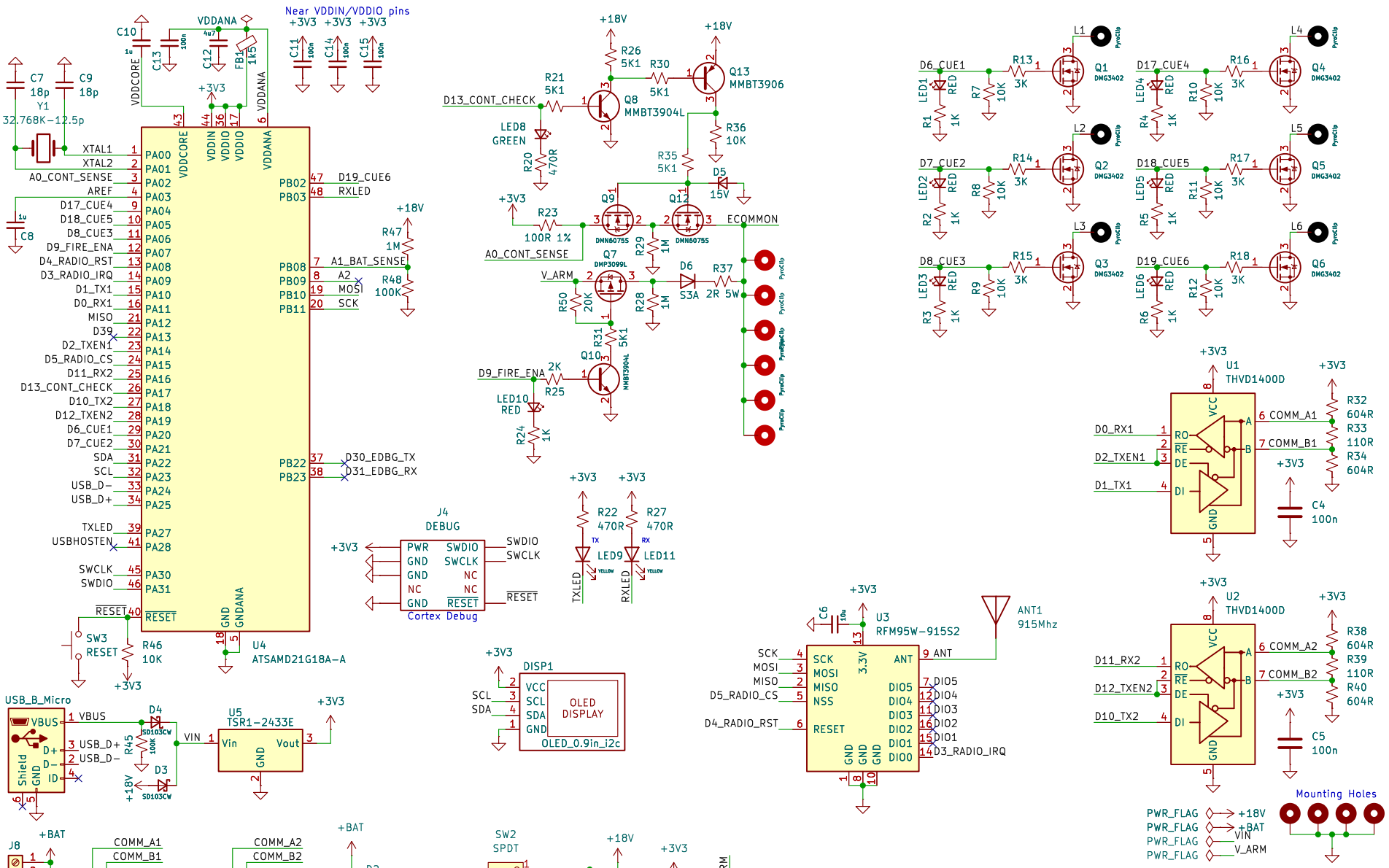

Rudy Albachten

Sheet: /

File: LineSlat.kicad_sch

Title: LineSlat – DaisyChained pyro controllers

Size: USLetter	Date: 2024-12-10	Rev: v1.0
KiCad E.D.A. 8.0.6		Id: 1/1