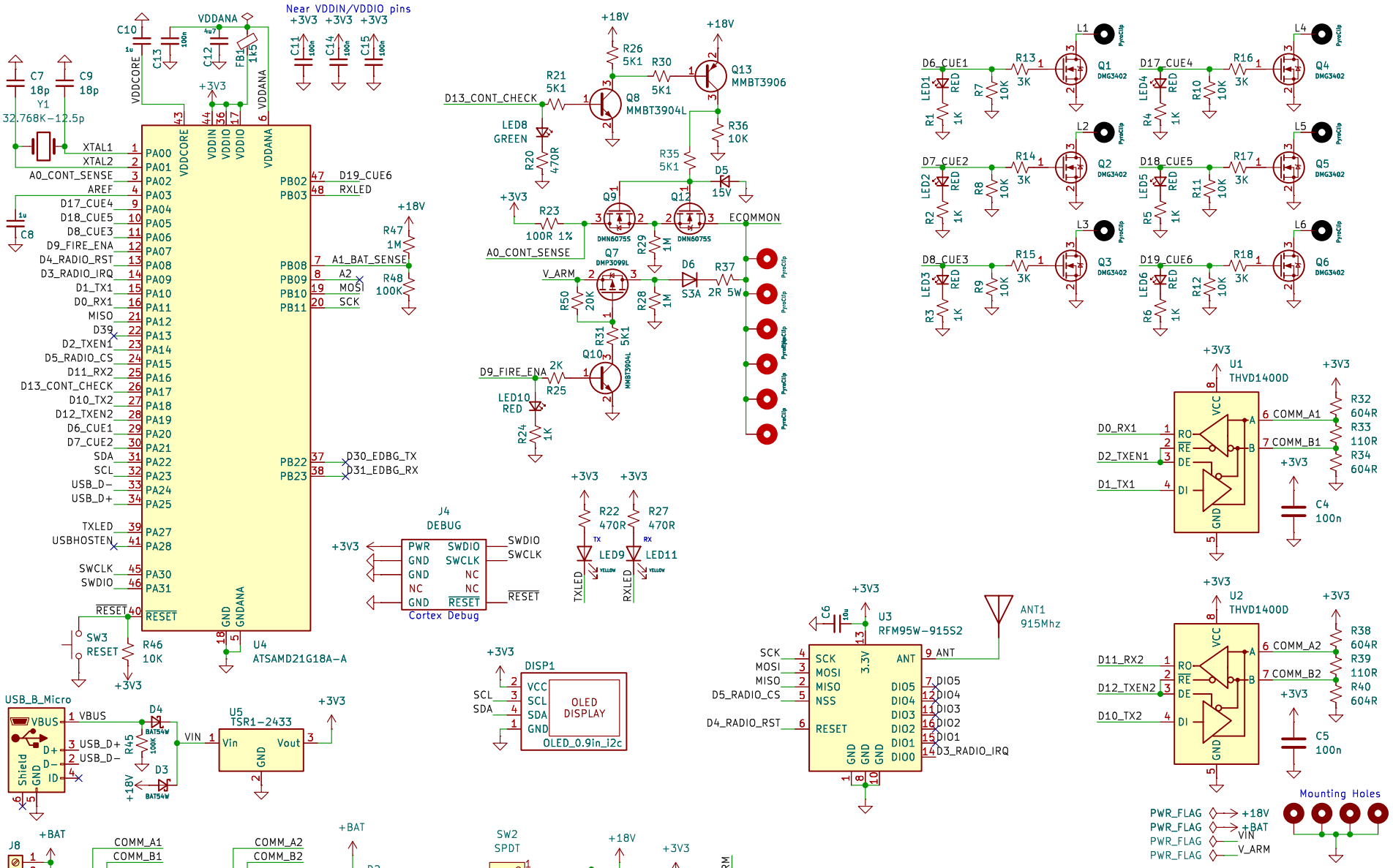


Rudy Albachten

Sheet: /

File: LineSlat.kicad_sch

**Title: LineSlat – DaisyChained pyro controllers**

| | | |
|---|---|---|
| Size: USLetter | Date: 2024-12-10 | Rev: v1.0 |
| KiCad E.D.A. 8.0.6 | | Id: 1/1 |