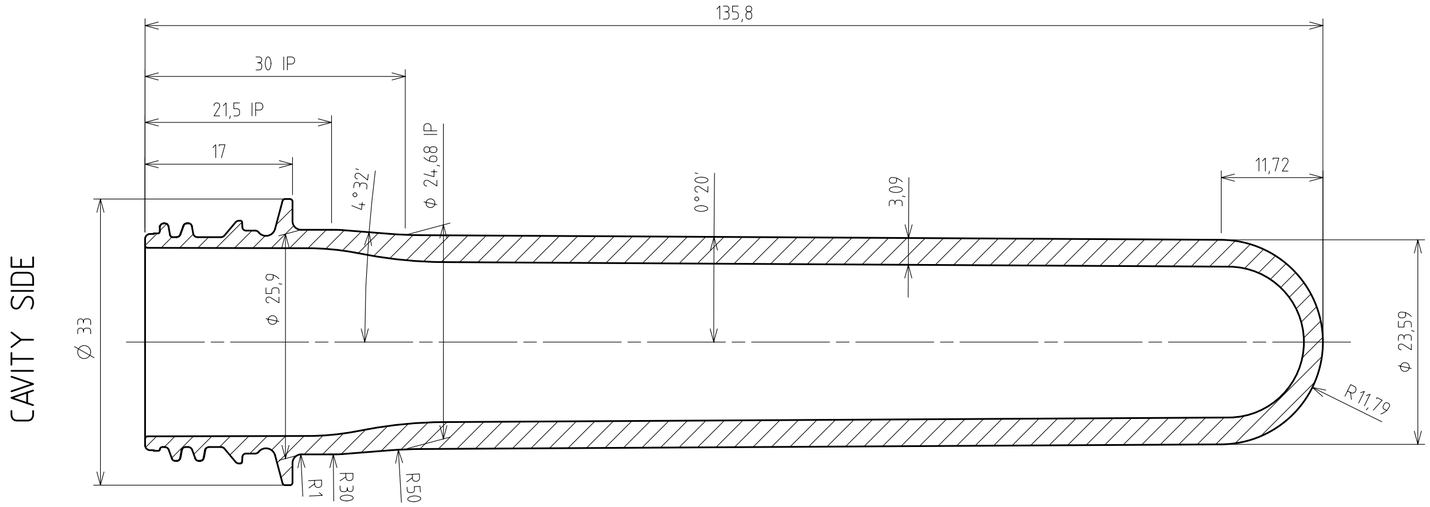

SECTION A-A SCALE 2:1

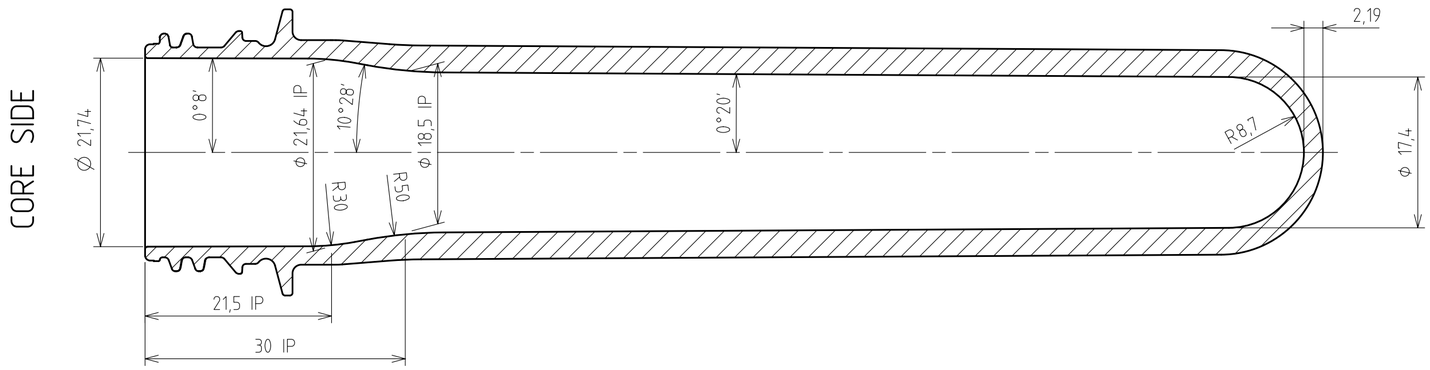

SURFACE FINISHES AND SPLITLINES

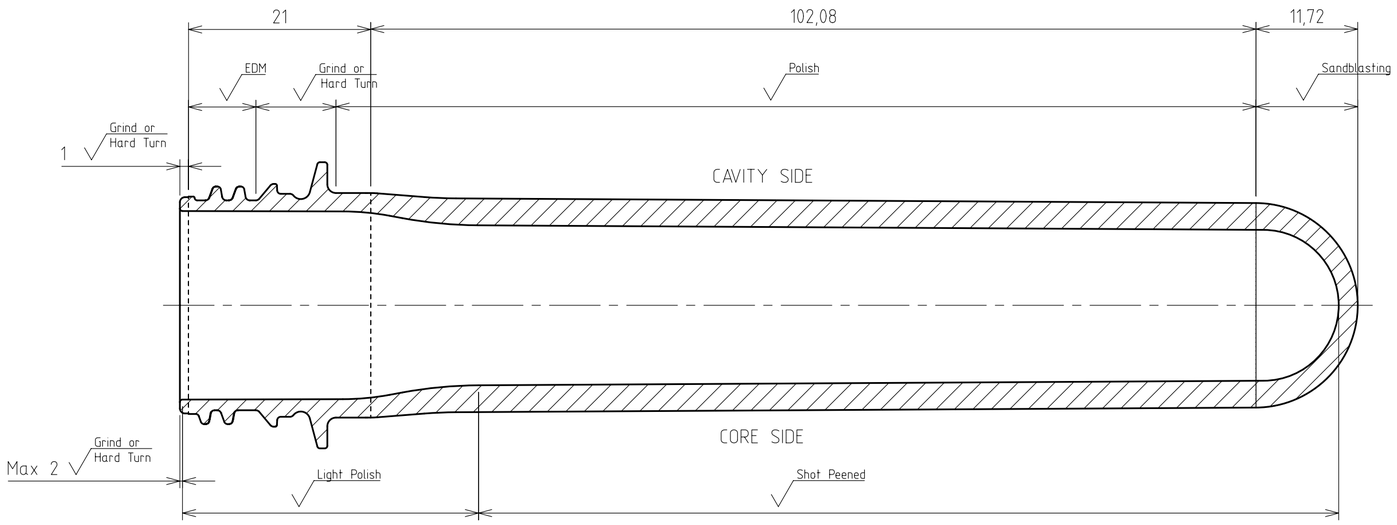

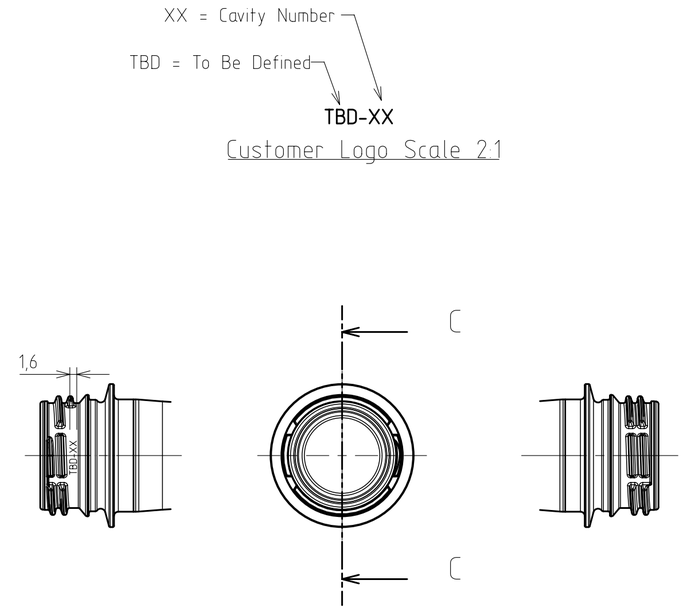

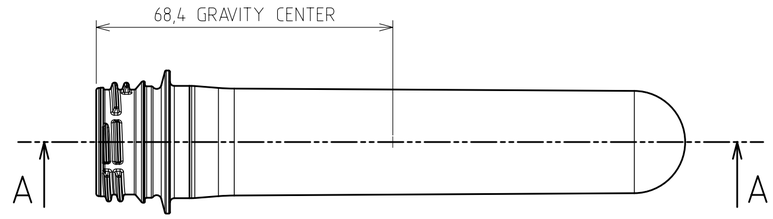

NOTES:

1) NECK FINISH WEIGHT 3,8g
2) THE FINISH COMPLY WITH DRWG. N000051_86
3) DENSITY FOR WEIGHT CALCULATION 1,335 g/cm³
4) IP = INTERSECTION POINT

DESCRIPTION: 28mm PCO 1881 NECK FINISH 35,0g PREFORM	SCALE: 1:1	NOTES:
	MATERIAL: PET	

SIPA

Date: 01-Mar-2021		DRAWING N°:
Drawn: Gava,Al.		PN006984_00
Checked: Manunta,M.		
Approved: Pizzinat,T.		

Each modification must be comunicated and approved in written form by SIPA S.p.A.

This document and the information herein included are SIPA S.p.A. property and confidential. It is prohibited to reproduce it or to make it know in whole or in part to other parties without written authorization of SIPA S.p.A.