MOLDING SURFACE ENGRAVING DATA			
OPERATOR SIDE	TEXT	[-]	
	FONT	[-]	
	HEIGHT	[mm]	
	DEPTH	[mm]	
NON OPERATOR SIDE	TEXT	[-]	CAVITY NUMBER
			FROM
			TO
	FONT	[-]	OCR-B
	HEIGHT	[mm]	1,6
	DEPTH	[mm]	0,1
SHOWN POSITIVE ON PLASTIC			

MOLDING SURFACE FINISHES		
T/1	=	Hard Turning
S+B/2	=	B120 Shot Peening + Light Buffing
S+B/3	=	B120 Shot Peening + Heavy Buffing
E/1	=	EDM
P/1	=	Polishing

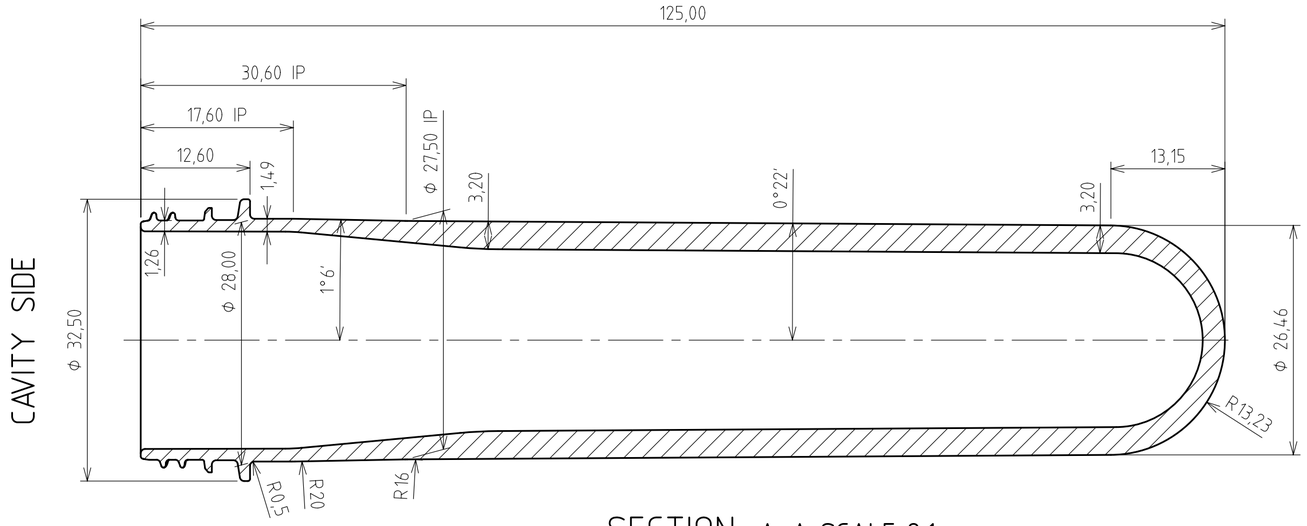

SECTION A-A SCALE 2:1

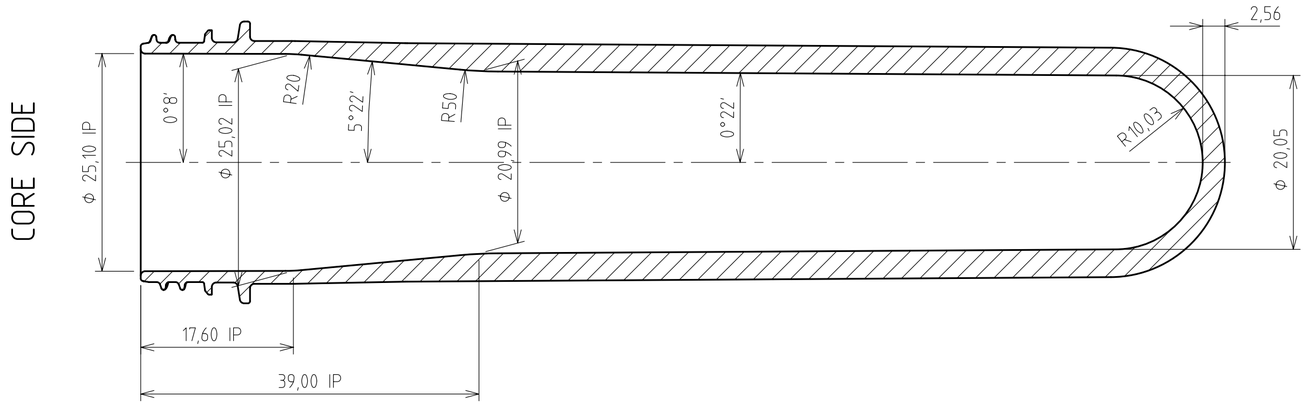

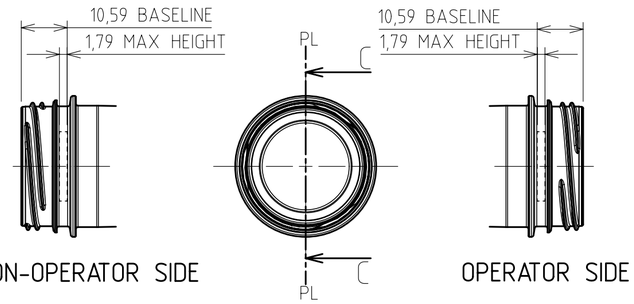

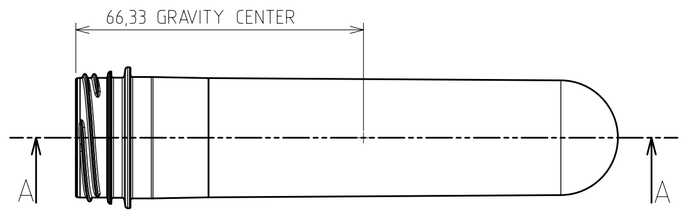

SURFACE FINISHES AND SPLITLINES

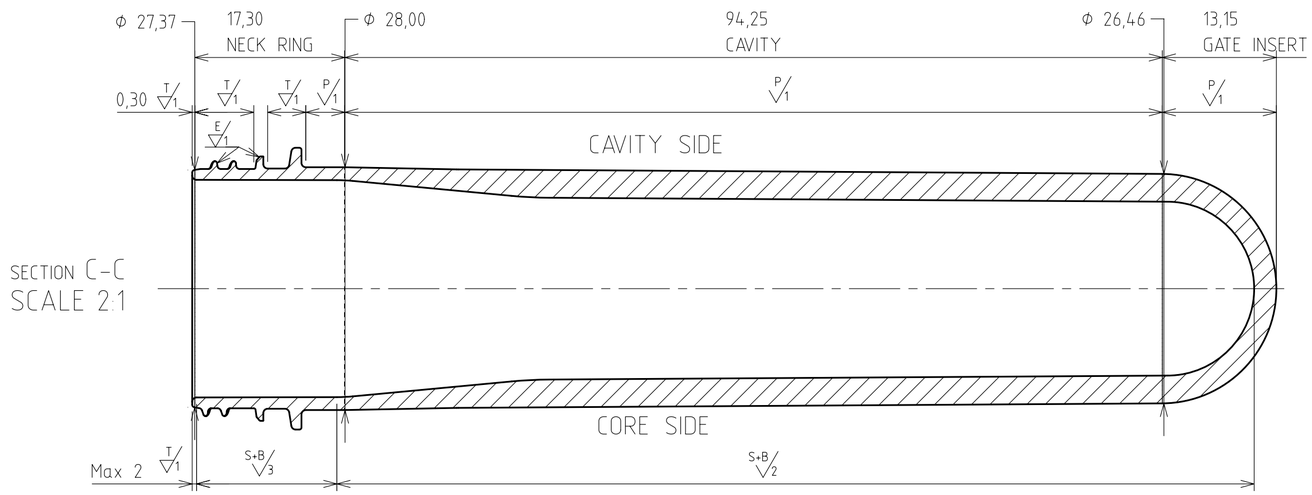

NOTES:

1) NECK FINISH WEIGHT 2,4g
2) THE FINISH COMPLY WITH DWG: N300114_02
3) DENSITY FOR WEIGHT CALCULATION 1,335g/cm³
4) IP = INTERSECTION POINT
5) PL = PARTING LINE

VER	REV	DATE	DESCRIPTION	NAME
-	/			
-	/			
-	/			
-	/			
_00	/00	12/04/23	NEW SHAPE FROM PN300256_02	M. MANUNTA

CONFIDENTIAL

DESCRIPTION:
29/25mm SHORTY
NECK FINISH
35,0g PREFORM

SCALE: 1:1

MATERIAL: PET

NOTES:

For prototyping tests, the surface finishing is valid only for the neck ring, for the rest the surface finishing will be polished.

SIPA

Date: 12-Apr-2023
Drawn: Manunta,M
Checked: Manunta,M.
Approved: Pizzinat,T.

DRAWING N°: PN008729_00

Each modification must be comunicated and approved in written form by SIPA S.p.A.

This document and the information herein included are SIPA S.p.A. property and confidential. It is prohibited to reproduce it or to make it know in whole or in part to other parties without written authorization of SIPA S.p.A.