CAVITY SIDE

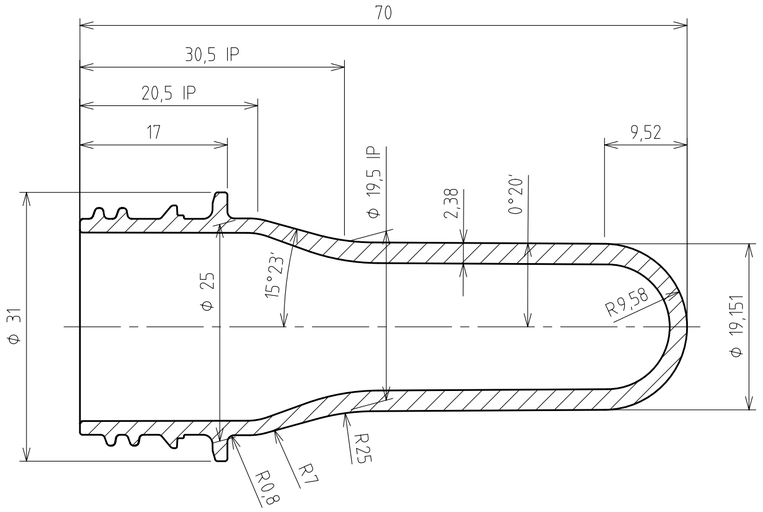

SECTION A-A SCALE 2:1

CORE SIDE

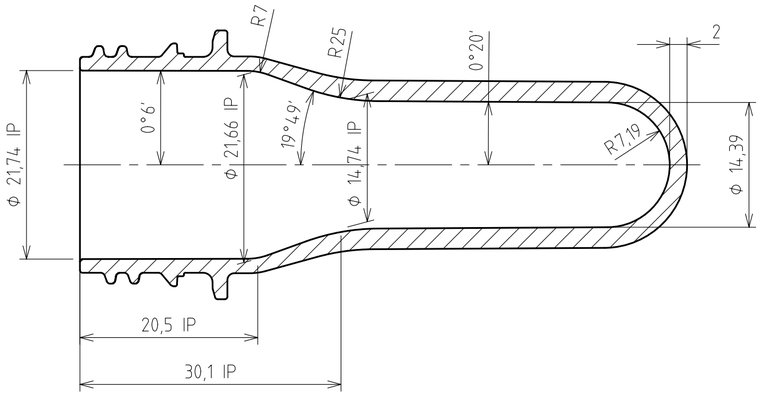

SURFACE FINISHES AND SPLITLINES

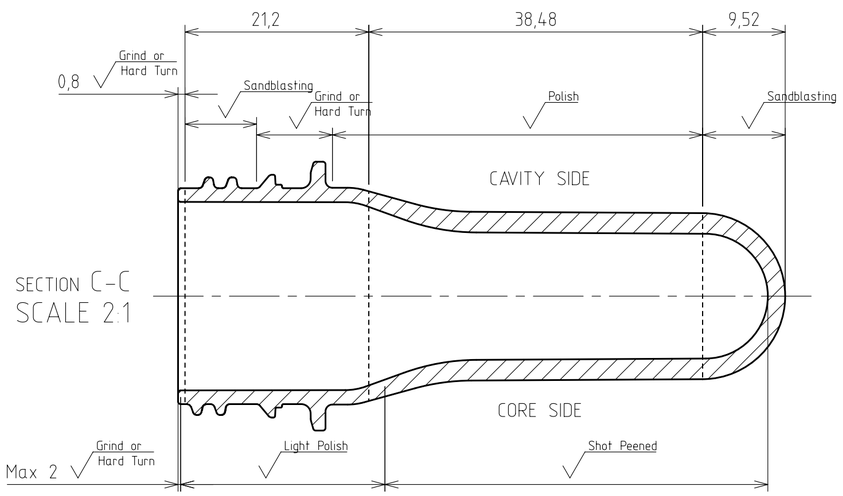

XX = Cavity Number

UR-XXX

Customer Logo Scale 2:1

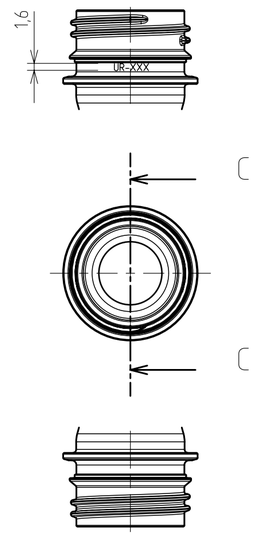

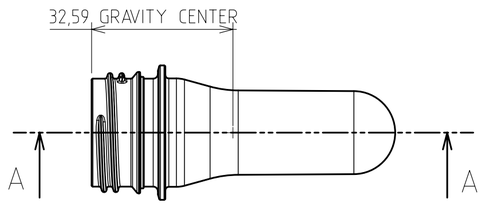

NOTES:

1) NECK FINISH WEIGHT 3,8g
2) THE FINISH COMPLY WITH DWG: N000051_69
3) DENSITY FOR WEIGHT CALCULATION 1,335g/cm³
4) IP = INTERSECTION POINT

DESCRIPTION: 28mm PCO 1881 MODIF FOR HEAT SET NECK FINISH 12,5g PREFORM	SCALE: 1:1	NOTES:
	MATERIAL: PET	

SIPA

Date:	05-Feb-2020
Drawn:	Manunta,M
Checked:	Manunta,M.
Approved:	Pizzinat,T.

DRAWING N°: PN006278_00

Each modification must be comunicated and approved in written form by SIPA S.p.A

CONFIDENTIAL

This document and the information herein included are SIPA S.p.A. property and confidential. It is prohibited to reproduce it or to make it know in whole or in part to other parties without written authorization of SIPA S.p.A

ITZITC11ETS1 Mon 06/22/2020 15:27:20.91