MOLDING SURFACE ENGRAVING DATA			
OPERATOR SIDE	TEXT	[-]	
	FONT	[-]	OCR-B
	HEIGHT	[mm]	1,6
	DEPTH	[mm]	0,1
NON OPERATOR SIDE	TEXT	[-]	CAVITY NUMBER
			FROM
			TO
	FONT	[-]	OCR-B
	HEIGHT	[mm]	1,6
	DEPTH	[mm]	0,1
SHOWN POSITIVE ON PLASTIC			

MOLDING SURFACE FINISHES		
T/1	=	Hard Turning
T+S/2	=	Hard Turning + B120 Shot Peening
E+S/2	=	EDM + B120 Shot Peening
S/2	=	(2) Shot Peening
S+B/4	=	(4) B120 Shot Peening + Buffing
S+B/5	=	(5) B120 Shot Peening + Buffing

CAVITY SIDE

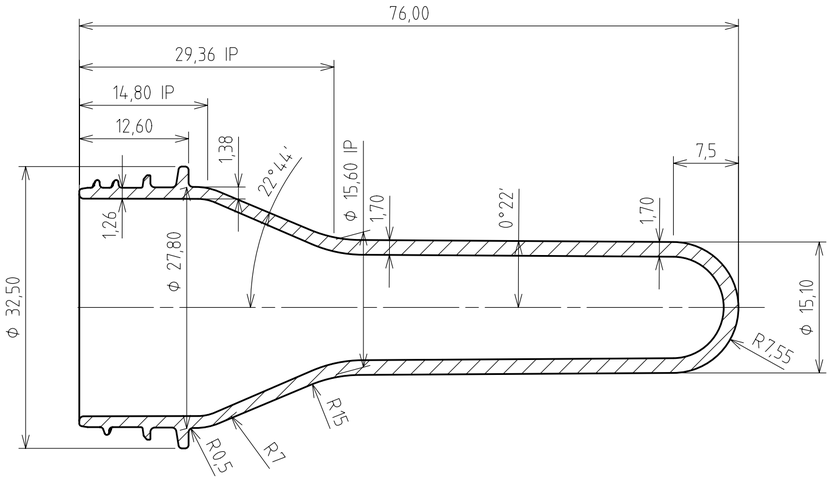

SECTION A-A SCALE 2:1

CORE SIDE

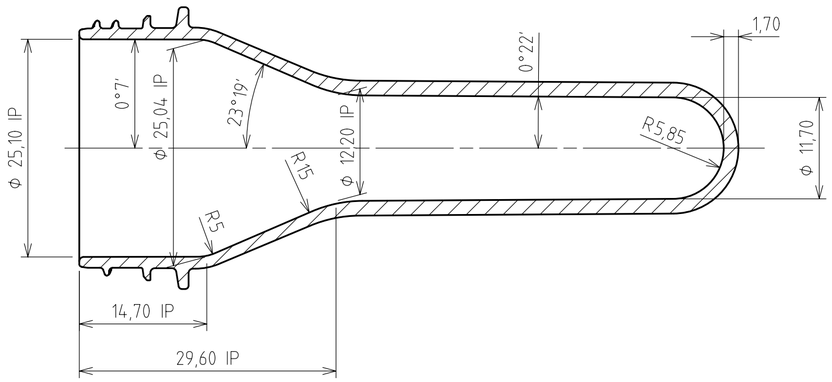

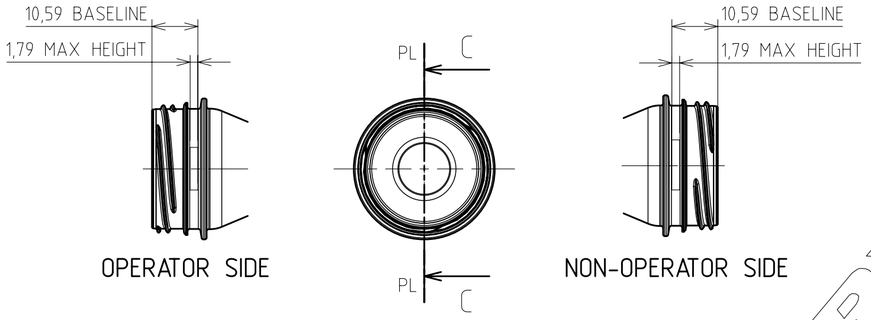

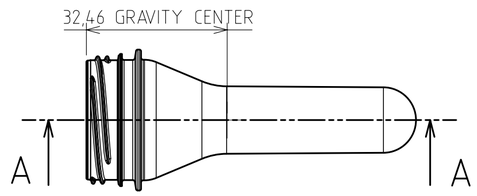

SURFACE FINISHES AND SPLITLINES

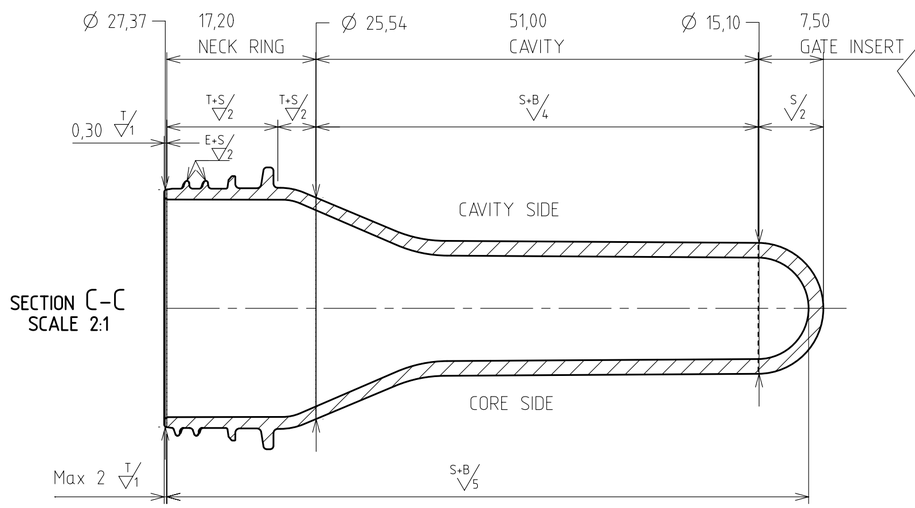

SECTION C-C
SCALE 2:1

PRELIMINARY
DON'T USE FOR APPROVAL

NOTES:

1) NECK FINISH WEIGHT 2,4g
2) THE FINISH COMPLY WITH DWG: N000114_05
3) DENSITY FOR WEIGHT CALCULATION 1,335g/cm³
4) IP = INTERSECTION POINT
5) PL = PARTING LINE

VER	REV	DATE	DESCRIPTION	NAME
-	/			
-	/			
-	/			
_01	/00	25/10/24	SAME NECK RING OF PN009957_00	M. MANUNTA
_00	/00	25/10/24	FIRST ISSUE	M. MANUNTA

CONFIDENTIAL

DESCRIPTION:
29/25mm SHORTY
NECK FINISH
9,0g PREFORM

SCALE: 1:1

MATERIAL: PET

NOTES:

For prototyping tests, the surface finishing is valid only for the neck ring, for the rest the surface finishing will be polished.

SIPA

Date: 25-Oct-2024
Drawn: Manunta,M
Checked: Manunta,M.
Approved: Pizzinat,T.

DRAWING N°: PN009957_01

This document and the information herein included are SIPA S.p.A. property and confidential. It is prohibited to reproduce it or to make it know in whole or in part to other parties without written authorization of SIPA S.p.A.

Each modification must be comunicated and approved in written form by SIPA S.p.A.