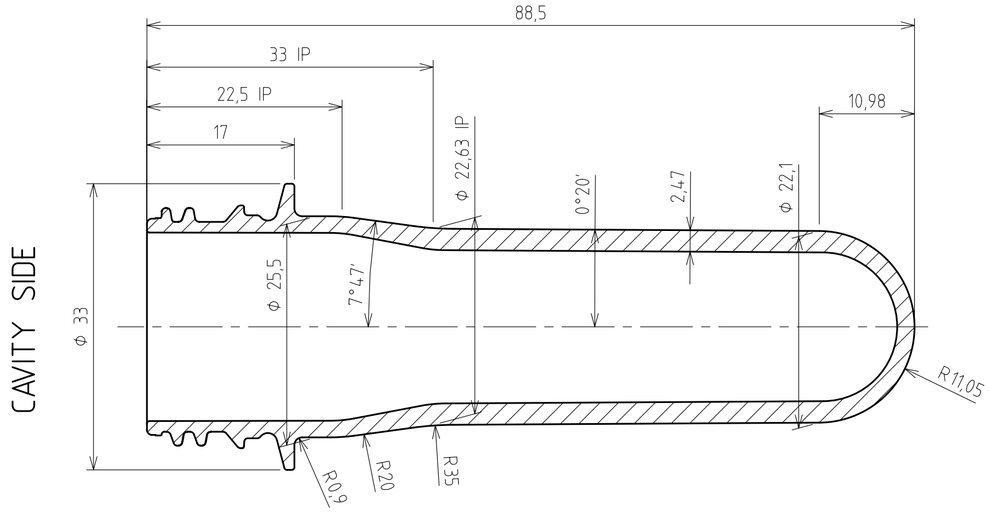

SECTION A-A SCALE 2:1

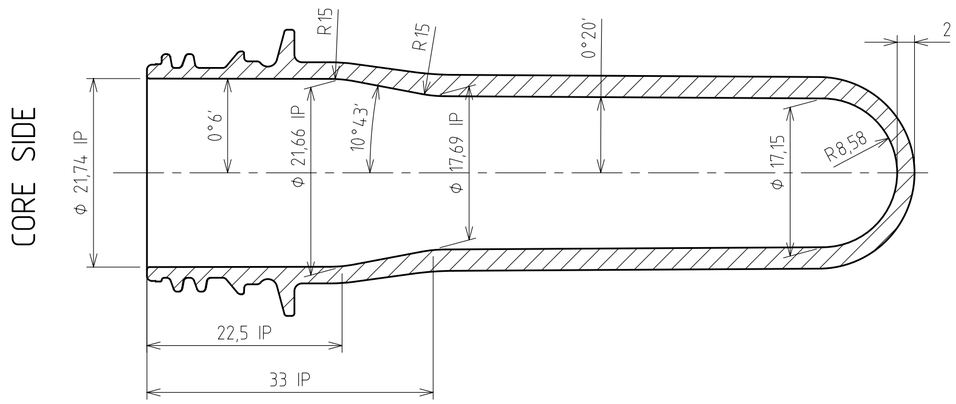

SURFACE FINISHES AND SPLITLINES

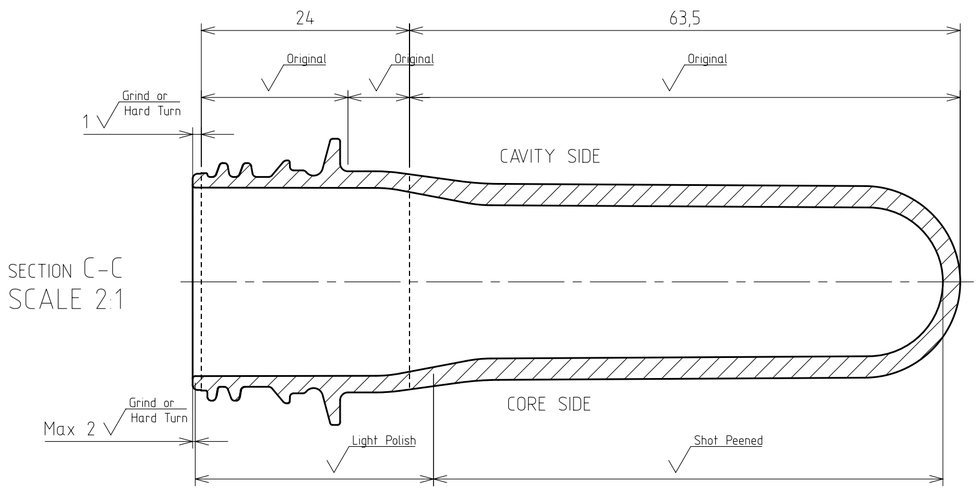

XX = Cavity Number

eskapet 19-XX

Customer Logo Scale 2:1

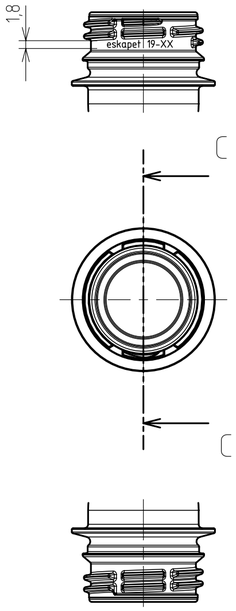

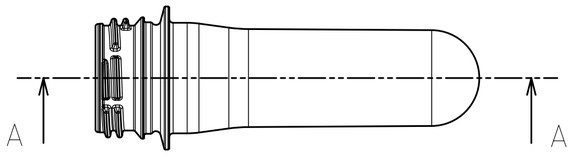

NOTES:

1) NECK FINISH WEIGHT 3,8g
2) THE FINISH COMPLY WITH DWG: N000051_86
3) DENSITY FOR WEIGHT CALCULATION 1,335g/cm³
4) IP = INTERSECTION POINT

DESCRIPTION:		NOTES:
28mm PCO 1881 NECK FINISH 18,0g PREFORM	SCALE: 1:1 MATERIAL: PET	

SIPA

Date: 10/12/2015	DRAWING N°:	
Drawn: M. MANUNTA	PN004110_01	
Checked: T. PIZZINAT		
Approved: D. ZANETTE		

CONFIDENTIAL

Each modification must be comunicated and approved in written form by SIPA S.p.A

This document and the information herein included are SIPA S.p.A. property and confidential. It is prohibited to reproduce it or to make it know in whole or in part to other parties without written authorization of SIPA S.p.A