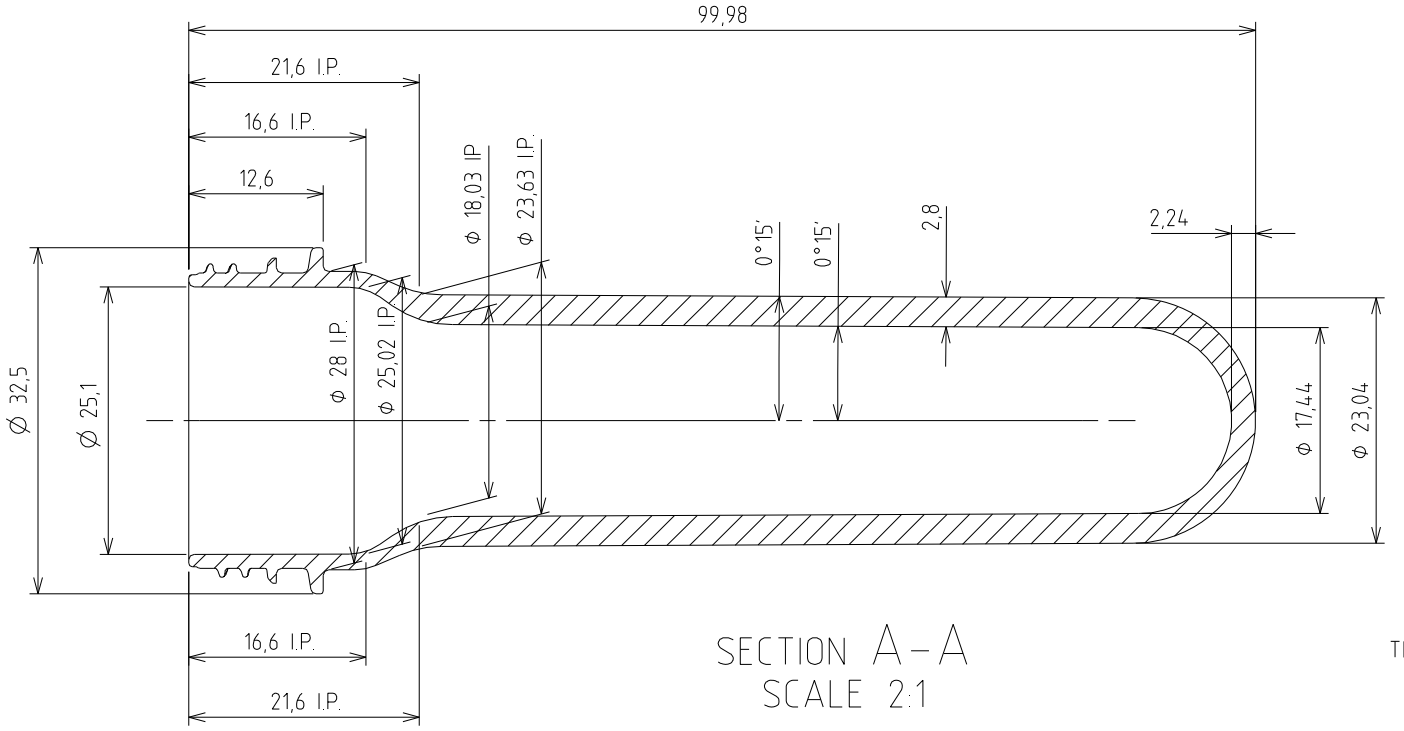

SECTION A-A
SCALE 2:1

XX = Cavity Number
TBD = To Be Definied

TBD-XX

Customer Logo Scale 2:1

FRONT VIEW

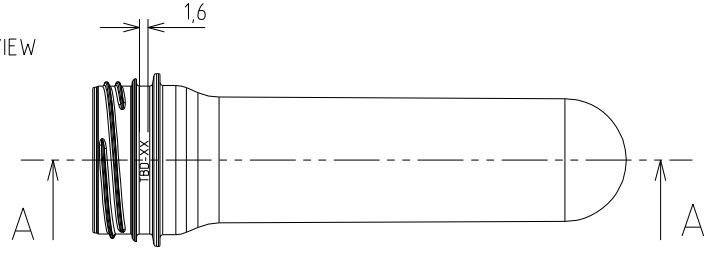

BACK VIEW

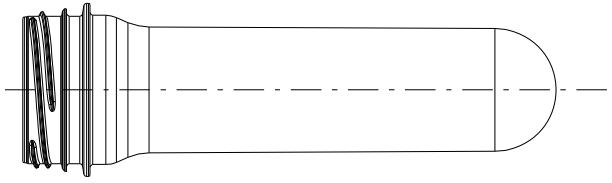

NOTES:

1) NECK FINISH WEIGHT 2,4 g
2) THE FINISH COMPLY WITH DRWG. N000114_00
3) DENSITY FOR WEIGHT CALCULATION 1,335 g/cm3
4) I.P. = INTERSECTION POINT

DESCRIPTION:		NOTES:
29/25mm SHORTY VER.00 NECK FINISH 22,5 g PREFORM	SCALE: 1:1 (2:1) MATERIAL: PET	

THIS DRAWING IS PROPERTY OF SIPA S.p.A. AND IS NOT TO BE USED OR REPRODUCED BY UNAUTHORIZED PERSONS

SIPA PLASTIC PACKAGING SYSTEM
VITTORIO VENETO (TV) -ITALY-

Date:	12/11/2012
Drawn:	C. CUI
Checked:	G. XU
Approved:	G. XU

DRAWING N°: PN300211_00