RFMi
A BRAND OF AKOUSTIS

Preliminary

RoHS compliant

XTC4010-1

48.00000 MHz TCXO

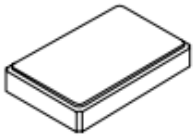

SM2016-6

Features:

- Ultra Miniature SMD Package
- Good Frequency Stability
- Good Phase Noise Response
- Moisture Sensitivity Level (MSL) : Level-1
- AEC-Q200 compliance

Description and Applications:
Surface mount 2.0mmx1.6mm TCXO for use in wireless communications devices
Electrical Specifications:

XTC4010-1	**Specifications**
Nominal Frequency, Fo	48.0 MHz
Storage Temperature Range	-40°C to +105°C
Operating Temperature Range	-40°C to +105°C
Power Supply Voltage, Vcc	1.68~3.63 V (Nominal to 3.0V)
Output Waveform	Clipped Sinewave
Output Voltage with Load 10pF//10KΩ, Vout	0.8 Vp-p min
Power Supply Current, Icc	2.0 mA max
Frequency Tolerance as received	+/- 1.5 ppm max @ 25°C +/- 3°C
Frequency Tolerance after reflow	+/- 2.5 ppm max @ 25°C +/- 3°C
Frequency Stability a. Vs. Temperature (-40~105°C) b. Vs. Load varied 10pF//10KΩ+/-10% c. Vs. Supply Voltage varied Vcc+/-5%	 +/- 5.0 ppm (reference to 25°C) +/- 0.3 ppm +/- 0.2 ppm
Start Up Time (90% of final RF level in Vp-p)	2.0 msec max.
Aging	+/-1.0 ppm/ first year @25°C
Harmonics	-8.0 dBc max

Copyright © 2020 by RFM Integrated Device, Inc.

SSB Phase Noise (@1KHz Carrier Offset) (@10KHz Carrier Offset) (@100KHz Carrier Offset)	-135 dBc/Hz max -148 dBc/Hz max -150 dBc/Hz max
Enable/Disable Function (OE function)	Pin 1: 0.8 Vcc min, Pin 3:Enable Pin 1: 0~0.2 Vcc, Pin 3 :Disable Pin 1: Do not use in open condition
Marking	Laser marking

CAUTION: Electrostatic Sensitive Device. Observe precautions for handling.

NOTES:

1. The design, manufacturing process, and specifications of this device are subject to change.
2. US or International patents may apply.
3. RoHS compliant from the first date of manufacture.

Mechanical Dimensions (mm):

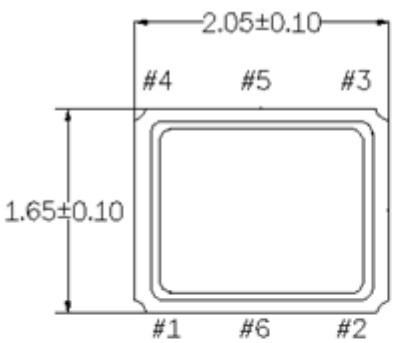

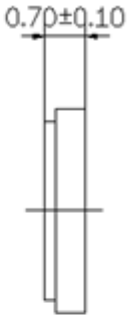

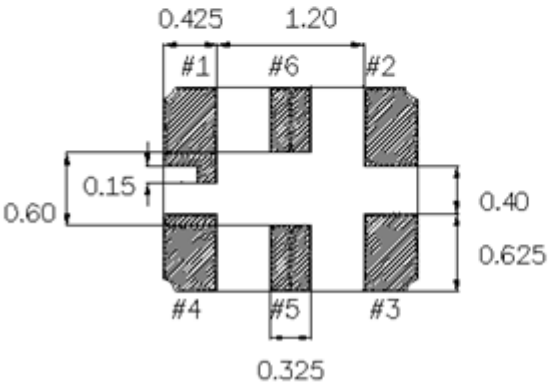

Pin	Pin Connection
#1	OE
#2	GND
#3	Output
#4	+Vcc
#5	No connect
#6	No connect

Note: This package has two extra pads in the middle (pin #5 and #6) that are used to test the internal Xtal by the factory, but are not intended for customer use. Do not place ground (GND) patterns (including ground pads, via holes, etc.) under the crystal unit, especially under pin #5 and #6. Also, do not run RF signal power or digital line under the package in the multi-layered PCB.

Copyright © 2020 by RFM Integrated Device, Inc.

Recommended Land Pattern: (unit: mm)

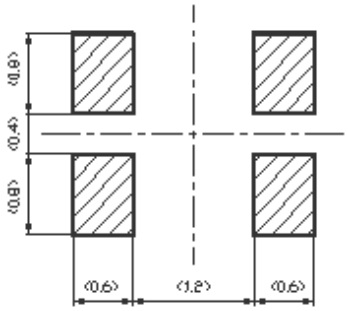

Marking:

Line 1: H9

Line 2: Y = Year, W = Week

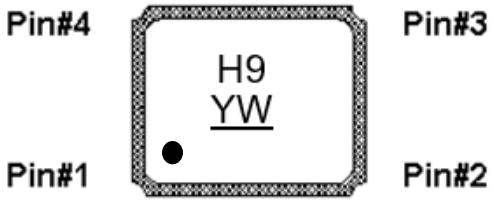

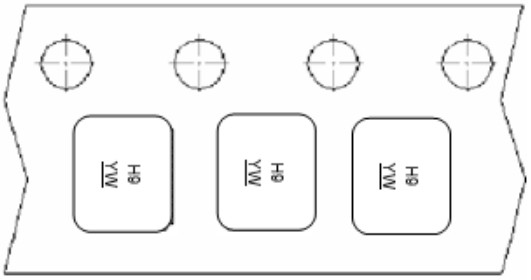

Copyright © 2020 by RFM Integrated Device, Inc.

Recommended Circuit

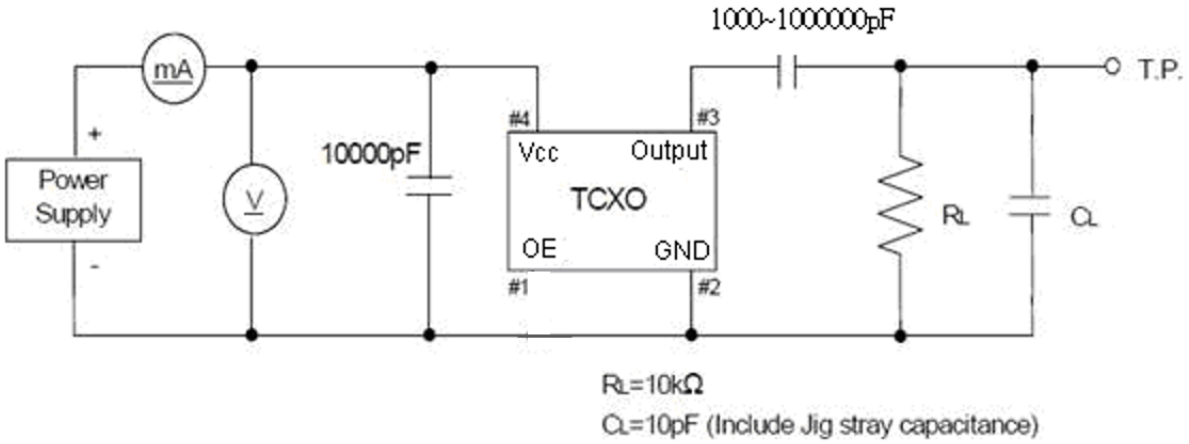

Reel Count:
7" = 3000

Reel Dimension

Tape and Reel Standard per ANSI/EIA-481

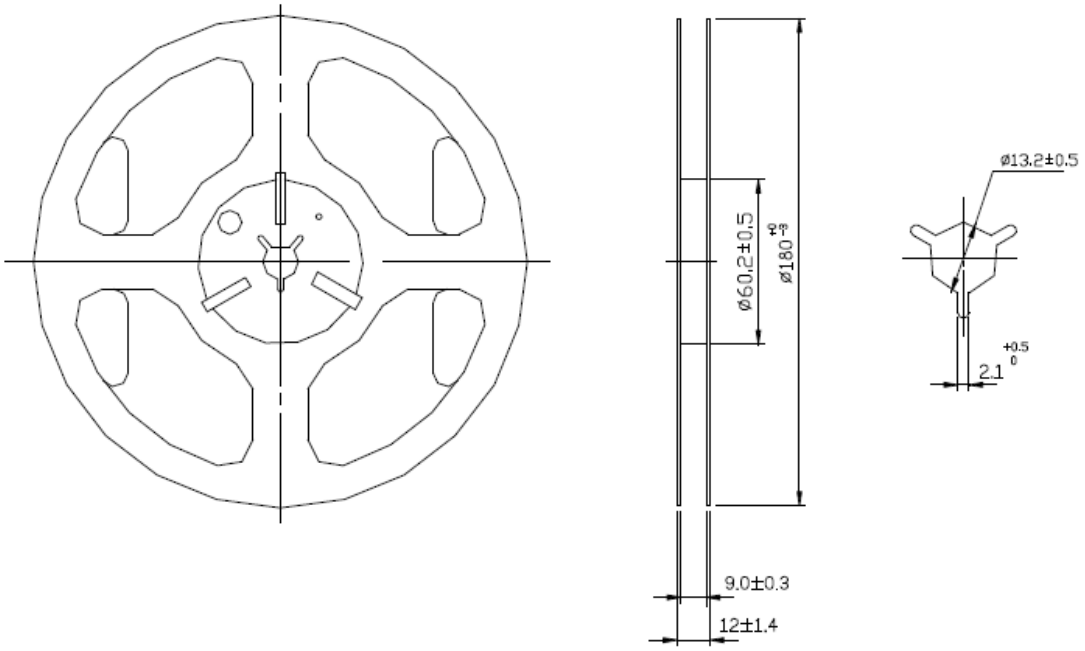

Copyright © 2020 by RFM Integrated Device, Inc.

Tape Dimensions (mm):

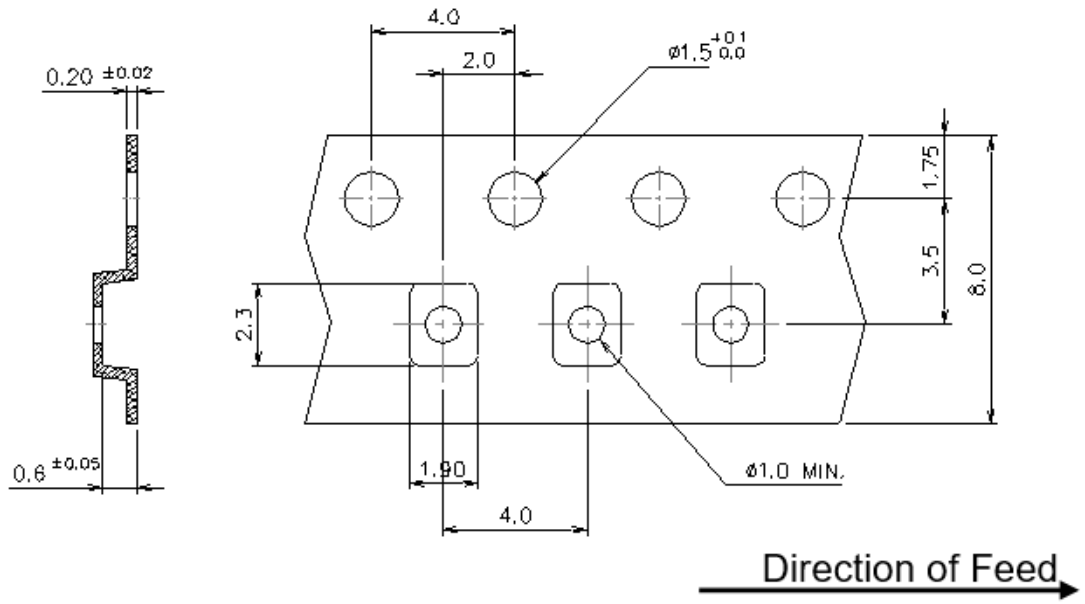

[NOTE]:

1. Unless otherwise specified tolerance on dimension +/-0.1 mm.
2. Material: conductive polystyrene with color black.
3. 10 pitch cumulative tolerance +/-0.2 mm.

Copyright © 2020 by RFM Integrated Device, Inc.

Packing Quantity/Packing:

3K pcs maximum per reel

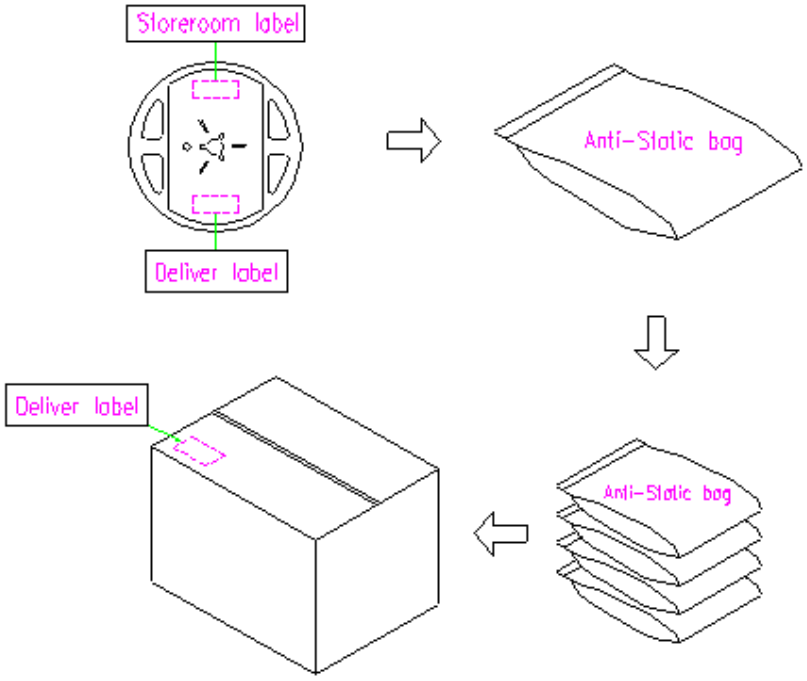

Reflow Profile:

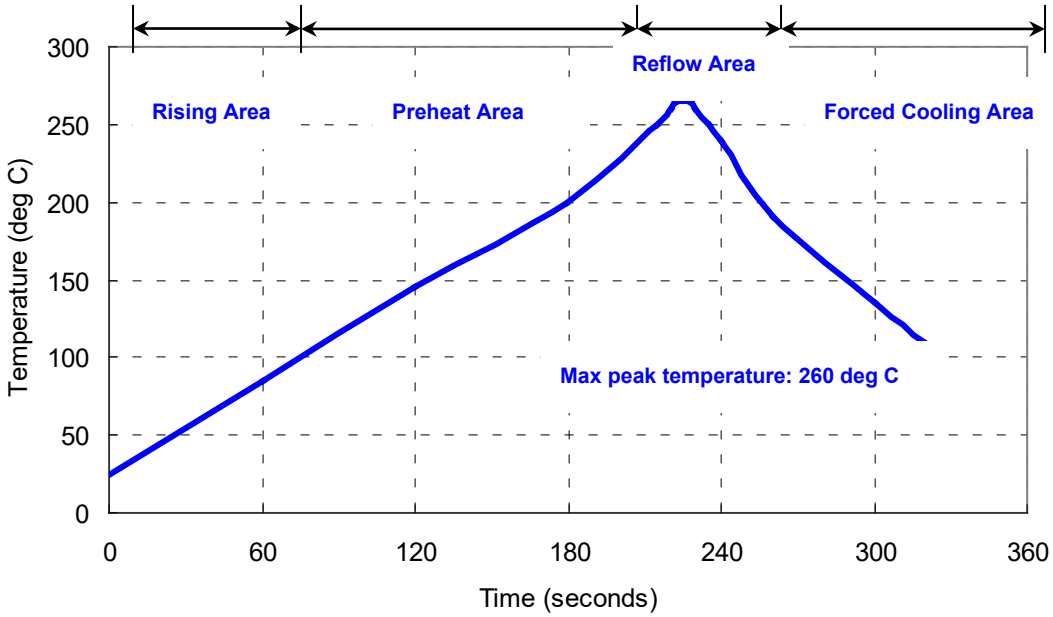

Copyright © 2020 by RFM Integrated Device, Inc.

Notes of the Usage:

1. Touch the solder iron at 260+/-5 deg C onto the leads for 10+/-2 sec max or touch the solder at 350+/-5 deg C onto the leads for 3+/-0.5 sec.
2. In the customer's reflow process, if it will remain some mechanical stress at the soldering terminals, also make some cracks on the soldering termination. Some cracks will cause open or short circuit and cause of thermal increasing or smoking. Don't make any excess mechanical stress to soldering points.
3. In case of giving a heavy shock to the products, it may make an open or short circuit and cause of thermal increasing and smoking. To avoid heavy shock impact applying to products is strictly required.
4. Ultrasonic cleaning should be avoided to prevent damage to the TCXO.
5. Do Not Use Ultrasonic-Wave Soldering or Wave Solder with Package Immersed in Solder.

Notes of the Storage:

1. To keep products under the condition at the room temperature (-5~35 deg C) with normal humidity (45~75%). Absorption of moisture and dewdrop may make inferiority of characteristics and a short circuit.
2. Oxidization of terminals shall make the solderability more inferior. Dusts and corrosive gas will make a cause of the open or short circuit. Keep it in the clean place where is not in dusty and no corrosive gas.
3. Use the unti-static material to the storage package.
4. Don't put any excess weight to the TCXO in the storage process.
5. Don't move the product from the cold place to the hot place in the short time, otherwise it may make some dew-drop, then a short circuit may happen in case.
6. Storage periods should be maximum 6 months under condition of above item 1 after delivery from the factory.
7. Once open the bag, there is possibility of electrical characteristics deterioration due to absorption of moisture. So, please use parts within 7 days after opening the bag.
8. If you have to keep parts without using after opening the bag, please put the drying agent in the bag, fold the bag and keep it in the place where temperature and humidity are controlled (nitrogen atmosphere box etc.)

Copyright © 2020 by RFM Integrated Device, Inc.