LV-MaxSonar®-EZ™ Series

High Performance Sonar Range Finder

MB1000, MB1010, MB1020, MB1030, MB1040[2]

With 2.5V - 5.5V power the LV-MaxSonar-EZ provides very short to long-range detection and ranging in a very small package. The LV-MaxSonar-EZ detects objects from 0-inches to 254-inches (6.45-meters) and provides sonar range information from 6-inches out to 254-inches with 1-inch resolution. Objects from 0-inches to 6-inches typically range as 6-inches[1]. The interface output formats included are pulse width output, analog voltage output, and RS232 serial output. Factory calibration and testing is completed with a flat object. [1]***See Close Range Operation***

Features

- Continuously variable gain for control and side lobe suppression
- Object detection to zero range objects
- 2.5V to 5.5V supply with 2mA typical current draw
- Readings can occur up to every 50mS, (20-Hz rate)
- Free run operation can continually measure and output range information
- Triggered operation provides the range reading as desired
- Interfaces are active simultaneously
- Serial, 0 to Vcc, 9600 Baud, 81N
- Analog, (Vcc/512) / inch
- Pulse width, (147uS/inch)
- Learns ringdown pattern when commanded to start ranging
- Designed for protected indoor environments
- Sensor operates at 42KHz
- High output square wave sensor drive (double Vcc)
- Actual operating temperature range from –40°C to +65°C, Recommended operating temperature range from 0°C to +60°C [1]

Benefits

- Very low cost ultrasonic rangefinder
- Reliable and stable range data
- Quality beam characteristics
- Mounting holes provided on the circuit board
- Very low power ranger, excellent for multiple sensor or battery-based systems
- Fast measurement cycles
- Sensor reports the range reading directly and frees up user processor
- Choose one of three sensor outputs
- Triggered externally or internally

Applications and Uses

- UAV blimps, micro planes and some helicopters
- Bin level measurement
- Proximity zone detection
- People detection
- Robot ranging sensor
- Autonomous navigation
- Multi-sensor arrays
- Distance measuring
- Long range object detection
- Wide beam sensitivity

Notes:

[1]Please reference page 4 for minimum operating voltage verses temperature information.

[2] Please reference page 12 for part number key.

LV-MaxSonar-EZ Mechanical Dimensions

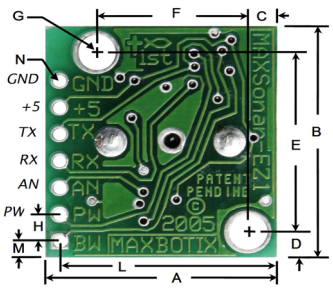

A	0.785"	19.9 mm	H	0.100"	2.54 mm
B	0.870"	22.1 mm	J	0.610"	15.5 mm
C	0.100"	2.54 mm	K	0.645"	16.4 mm
D	0.100"	2.54 mm	L	0.735"	18.7 mm
E	0.670"	17.0 mm	M	0.065"	1.7 mm
F	0.510"	12.6 mm	N	0.038" dia.	1.0 mm dia.
G	0.124" dia.	3.1 mm dia.	weight, 4.3 grams		

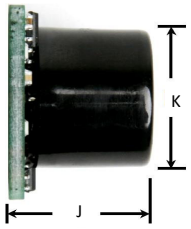

Close Range Operation

Applications requiring 100% reading-to-reading reliability should not use MaxSonar sensors at a distance closer than 6 inches. Although most users find MaxSonar sensors to work reliably from 0 to 6 inches for detecting objects in many applications, MaxBotix® Inc. does not guarantee operational reliability for objects closer than the minimum reported distance. Because of ultrasonic physics, these sensors are unable to achieve 100% reliability at close distances.

Warning: Personal Safety Applications

We do not recommend or endorse this product be used as a component in any personal safety applications. This product is not designed, intended or authorized for such use. These sensors and controls do not include the self-checking redundant circuitry needed for such use. Such unauthorized use may create a failure of the MaxBotix® Inc. product which may result in personal injury or death. MaxBotix® Inc. will not be held liable for unauthorized use of this component.

Copyright 2005 - 2024 MaxBotix Incorporated Patent 7,679,996

About Ultrasonic Sensors

Our ultrasonic sensors are in air, non-contact object detection and ranging sensors that detect objects within an area. These sensors are not affected by the color or other visual characteristics of the detected object. Ultrasonic sensors use high frequency sound to detect and localize objects in a variety of environments. Ultrasonic sensors measure the time of flight for sound that has been transmitted to and reflected back from nearby objects. Based upon the time of flight, the sensor then outputs a range reading.

Pin Out Description

Pin 1-BW-*Leave open or hold low for serial output on the TX output. When BW pin is held high the TX output sends a pulse (instead of serial data), suitable for low noise chaining.

Pin 2-PW- This pin outputs a pulse width representation of range. The distance can be calculated using the scale factor of 147uS per inch.

Pin 3-AN- Outputs analog voltage with a scaling factor of (Vcc/512) per inch. A supply of 5V yields ~9.8mV/in. and 3.3V yields ~6.4mV/in. The output is buffered and corresponds to the most recent range data.

Pin 4-RX– This pin is internally pulled high. The LV-MaxSonar-EZ will continually measure range and output if RX data is left unconnected or held high. If held low the sensor will stop ranging. Bring high for 20uS or more to command a range reading.

Pin 5-TX- When the *BW is open or held low, the TX output delivers asynchronous serial with an RS232 format, except voltages are 0-Vcc. The output is an ASCII capital "R", followed by three ASCII character digits representing the range in inches up to a maximum of 255, followed by a carriage return (ASCII 13). The baud rate is 9600, 8 bits, no parity, with one stop bit. Although the voltage of 0-Vcc is outside the RS232 standard, most RS232 devices have sufficient margin to read 0-Vcc serial data. If standard voltage level RS232 is desired, invert, and connect an RS232 converter such as a MAX232. When BW pin is held high the TX output sends a single pulse, suitable for low noise chaining. (no serial data)

Pin 6-+5V- Vcc – Operates on 2.5V - 5.5V. Recommended current capability of 3mA for 5V, and 2mA for 3V. Please reference page 4 for minimum operating voltage verses temperature information.

Pin 7-GND- Return for the DC power supply. GND (& Vcc) must be ripple and noise free for best operation.

Range "0" Location

The LV-MaxSonar-EZ reports the range to distant targets starting from the front of the sensor as shown in the diagram below.

Range Zero

The range is measured from the front of the transducer.

In general, the LV-MaxSonar-EZ will report the range to the leading edge of the closest detectable object. Target detection has been characterized in the sensor beam patterns.

Sensor Minimum Distance

The sensor minimum reported distance is 6-inches (15.2 cm). However, the LV-MaxSonar-EZ will range and report targets to the front sensor face. Large targets closer than 6-inches will typically range as 6-inches.

Sensor Operation from 6-inches to 20-inches

Because of acoustic phase effects in the near field, objects between 6-inches and 20-inches may experience acoustic phase cancellation of the returning waveform resulting in inaccuracies of up to 2-inches. These effects become less prevalent as the target distance increases, and has not been observed past 20-inches.

Copyright 2005 - 2024 MaxBotix Incorporated Patent 7,679,996

General Power-Up Instruction

Each time the LV-MaxSonar-EZ is powered up, it will calibrate during its first read cycle. The sensor uses this stored information to range a close object. It is important that objects not be close to the sensor during this calibration cycle. The best sensitivity is obtained when the detection area is clear for fourteen inches, but good results are common when clear for at least seven inches. If an object is too close during the calibration cycle, the sensor may ignore objects at that distance.

The LV-MaxSonar-EZ does not use the calibration data to temperature compensate for range, but instead to compensate for the sensor ringdown pattern. If the temperature, humidity, or applied voltage changes during operation, the sensor may require recalibration to reacquire the ringdown pattern. Unless recalibrated, if the temperature increases, the sensor is more likely to have false close readings. If the temperature decreases, the sensor is more likely to have reduced up close sensitivity. To recalibrate the LV-MaxSonar-EZ, cycle power, then command a read cycle.

Timing Diagram

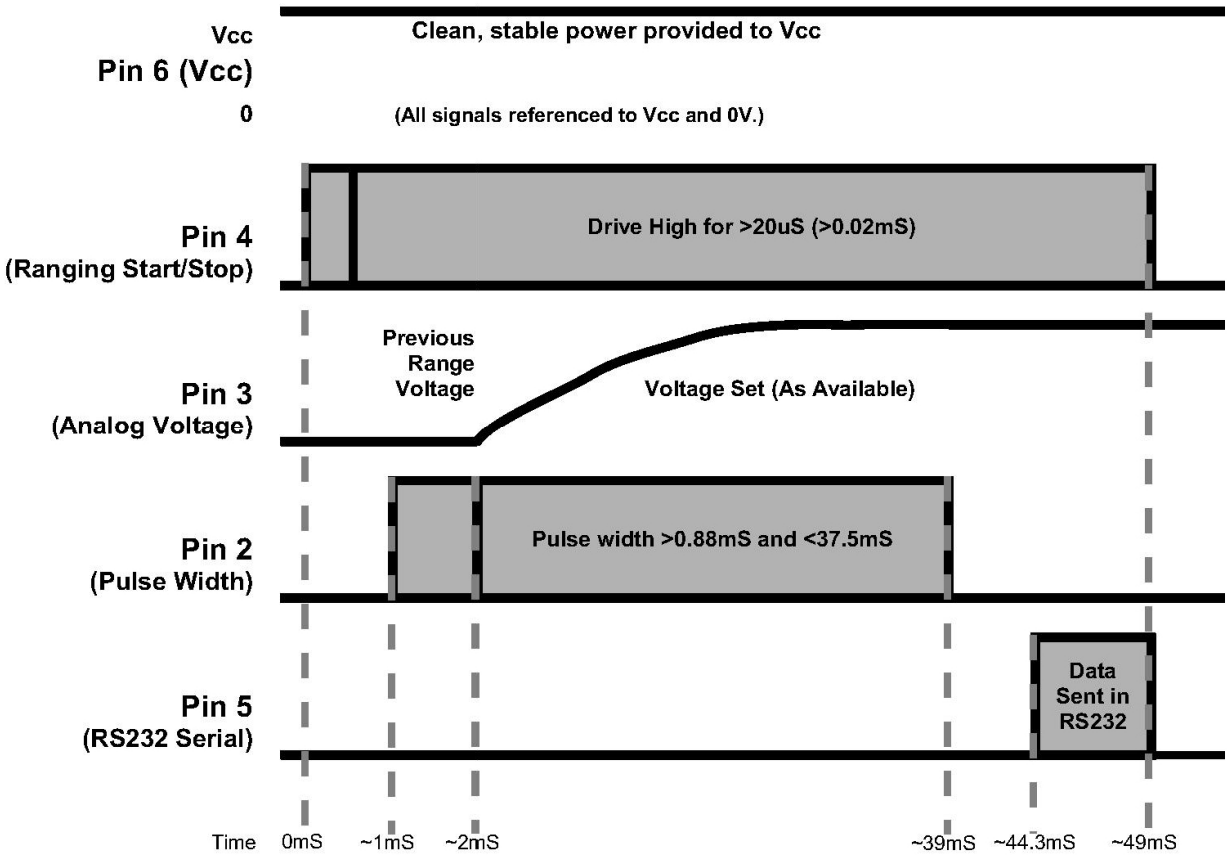

Timing Description

250mS after power-up, the LV-MaxSonar-EZ is ready to accept the RX command. If the RX pin is left open or held high, the sensor will first run a calibration cycle (49mS), and then it will take a range reading (49mS). After the power up delay, the first reading will take an additional ~100mS. Subsequent readings will take 49mS. The LV-MaxSonar-EZ checks the RX pin at the end of every cycle. Range data can be acquired once every 49mS.

Each 49mS period starts by the RX being high or open, after which the LV-MaxSonar-EZ sends the transmit burst, after which the pulse width pin (PW) is set high. When a target is detected the PW pin is pulled low. The PW pin is high for up to 37.5mS if no target is detected. The remainder of the 49mS time (less 4.7mS) is spent adjusting the analog voltage to the correct level. When a long distance is measured immediately after a short distance reading, the analog voltage may not reach the exact level within one read cycle. During the last 4.7mS, the serial data is sent.

The LV-MaxSonar-EZ timing is factory calibrated to one percent at five volts, and in use is better than two percent. In addition, operation at 3.3V typically causes the objects range, to be reported, one to two percent further than actual.

Copyright 2005 - 2024 MaxBotix Incorporated Patent 7,679,996

Voltage vs Temperature

The graph below shows minimum operating voltage of the sensor verses temperature.

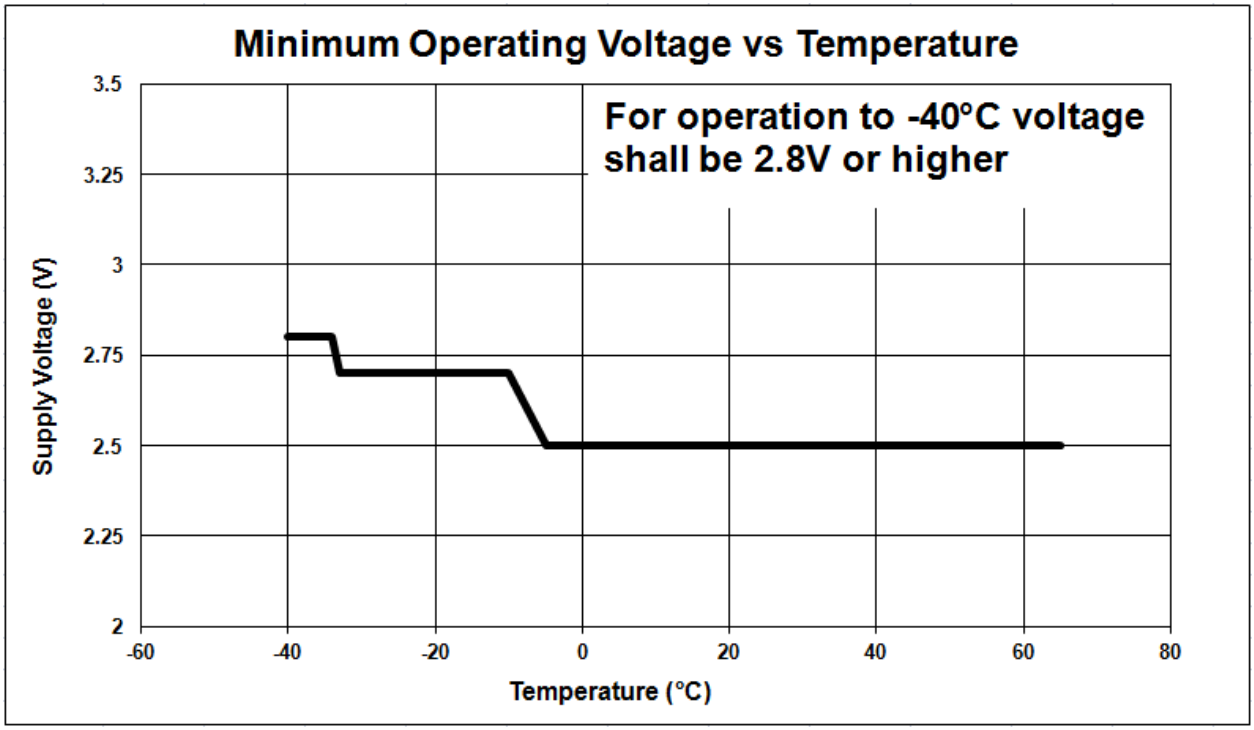

Copyright 2005 - 2024 MaxBotix Incorporated Patent 7,679,996

Using Multiple Sensors in a single system

When using multiple ultrasonic sensors in a single system, there can be interference (cross-talk) from the other sensors. MaxBotix Inc., has engineered and supplied a solution to this problem for the LV-MaxSonar-EZ sensors. The solution is referred to as chaining. We have 3 methods of chaining that work well to avoid the issue of cross-talk.

The first method is AN Output Commanded Loop. The first sensor will range, then trigger the next sensor to range and so on for all the sensor in the array. Once the last sensor has ranged, the array stops until the first sensor is triggered to range again. Below is a diagram on how to set this up.

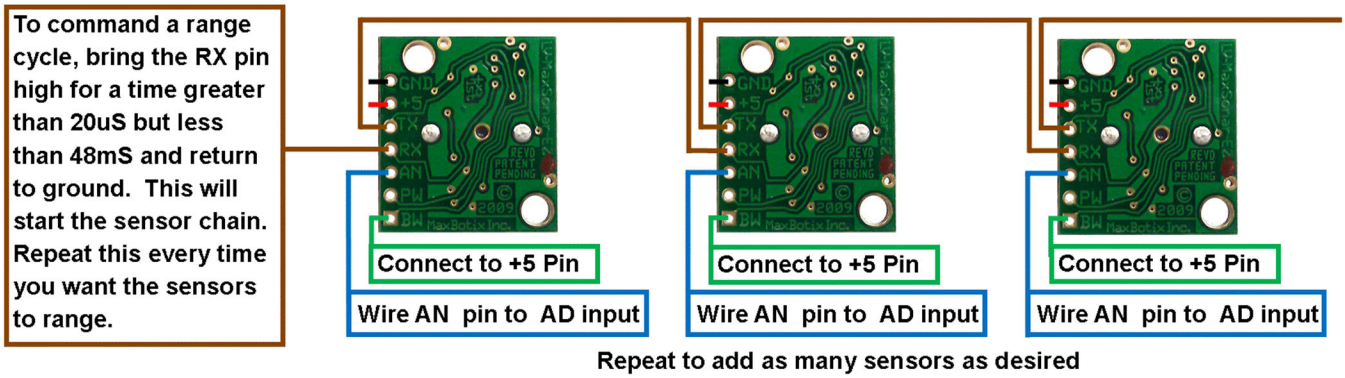

The next method is AN Output Constantly Looping. The first sensor will range, then trigger the next sensor to range and so on for all the sensor in the array. Once the last sensor has ranged, it will trigger the first sensor in the array to range again and will continue this loop indefinitely. Below is a diagram on how to set this up.

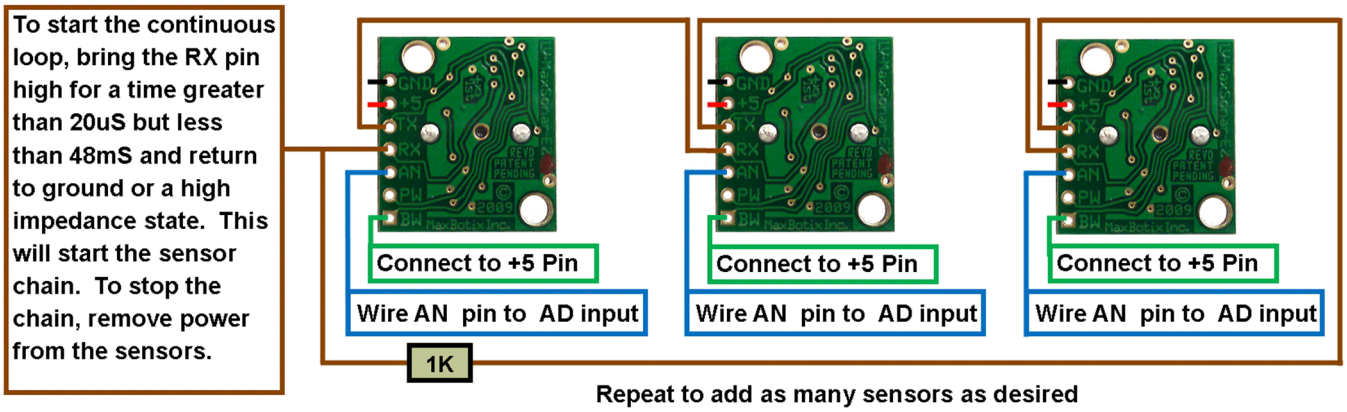

The final method is AN Output Simultaneous Operation. This method does not work in all applications and is sensitive to how the other sensors in the array are positioned in comparison to each other. Testing is recommend to verify this method will work for your application. All the sensors RX pins are conned together and triggered at the same time causing all the sensor to take a range reading at the same time. Once the range reading is complete, the sensors stop ranging until triggered next time. Below is a diagram on how to set this up.

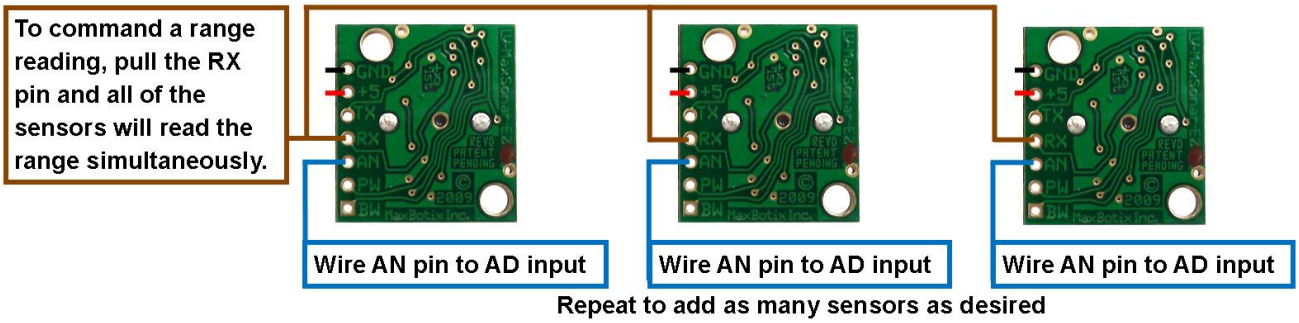

Copyright 2005 - 2024 MaxBotix Incorporated Patent 7,679,996

Independent Sensor Operation

The LV-MaxSonar-EZ sensors have the capability to operate independently when the user desires. When using the LV-MaxSonar-EZ sensors in single or independent sensor operation, it is easiest to allow the sensor to free-run. Free-run is the default mode of operation for all of the MaxBotix Inc., sensors. The LV-MaxSonar-EZ sensors have three separate outputs that update the range data simultaneously: Analog Voltage, Pulse Width, and RS232 Serial. Below are diagrams on how to connect the sensor for each of the three outputs when operating in a single or independent sensor operating environment.

Analog Output Sensor Operation

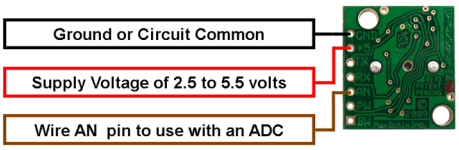

Pulse Width Output Sensor Operation

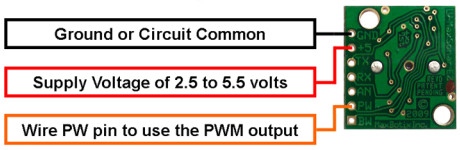

Serial Output Sensor Operation

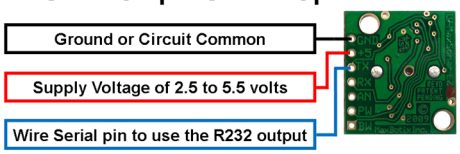

Copyright 2005 - 2024 MaxBotix Incorporated Patent 7,679,996

Selecting an LV-MaxSonar-EZ

Different applications require different sensors. The LV-MaxSonar-EZ product line offers varied sensitivity to allow you to select the best sensor to meet your needs.

The diagram above shows how each product balances sensitivity and noise tolerance. This does not effect the maximum range, pin outputs, or other operations of the sensor. To view how each sensor will function to different sized targets reference the LV-MaxSonar-EZ Beam Patterns.

The LV-MaxSonar-EZ Sensors At a Glance

People Detection **Wide Beam** **High Sensitivity**		**Best Balance**		**Large Targets** **Narrow Beam** **Noise Tolerance**
MB1000	**MB1010**	**MB1020**	**MB1030**	**MB1040**

Background Information Regarding our Beam Patterns

Each LV-MaxSonar-EZ sensor has a calibrated beam pattern. Each sensor is matched to provide the approximate detection pattern shown in this datasheet. This allows end users to select the part number that matches their given sensing application. Each part number has a consistent field of detection so additional units of the same part number will have similar beam patterns. The beam plots are provided to help identify an estimated detection zone for an application based on the acoustic properties of a target versus the plotted beam patterns.

People Sensing: For users that desire to detect people, the detection area to the 1-inch diameter dowel, in general, represents the area that the sensor will reliably detect people.

Each beam pattern is a 2D representation of the detection area of the sensor. The beam pattern is actually shaped like a 3D cone (having the same detection pattern both vertically and horizontally). Detection patterns for dowels are used to show the beam pattern of each sensor. Dowels are long cylindered targets of a given diameter. The dowels provide consistent target detection characteristics for a given size target which allows easy comparison of one MaxSonar sensor to another MaxSonar sensor.

For each part number, the four patterns (A, B, C, and D) represent the detection zone for a given target size. Each beam pattern shown is determined by the sensor's part number and target size.

The actual beam angle changes over the full range. Use the beam pattern for a specific target at any given distance to calculate the beam angle for that target at the specific distance. Generally, smaller targets are detected over a narrower beam angle and a shorter distance. Larger targets are detected over a wider beam angle and a longer range.

Beam Pattern Target Shapes

A 6.1-mm (0.25-inch) diameter dowel 4ft length
B 2.54-cm (1-inch) diameter dowel 4ft length
C 8.89-cm (3.5-inch) diameter dowel 4ft length
D 11-inch wide board 4ft in length moved left to right with the board parallel to the front sensor face. This shows the sensor's range capability.

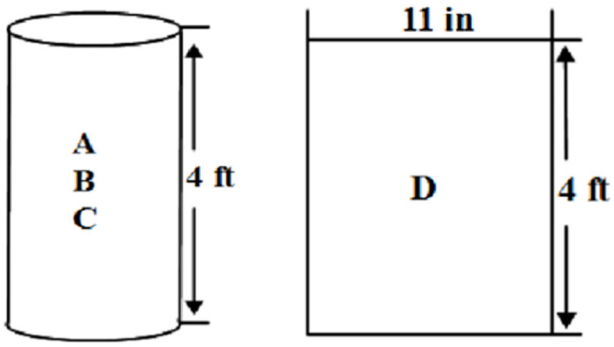

Copyright 2005 - 2024 MaxBotix Incorporated Patent 7,679,996

MB1000 LV-MaxSonar-EZ0

The LV-MaxSonar-EZ0 is the highest sensitivity and widest beam sensor of the LV-MaxSonar-EZ sensor series. The wide beam makes this sensor ideal for a variety of applications including people detection, autonomous navigation, and wide beam applications.

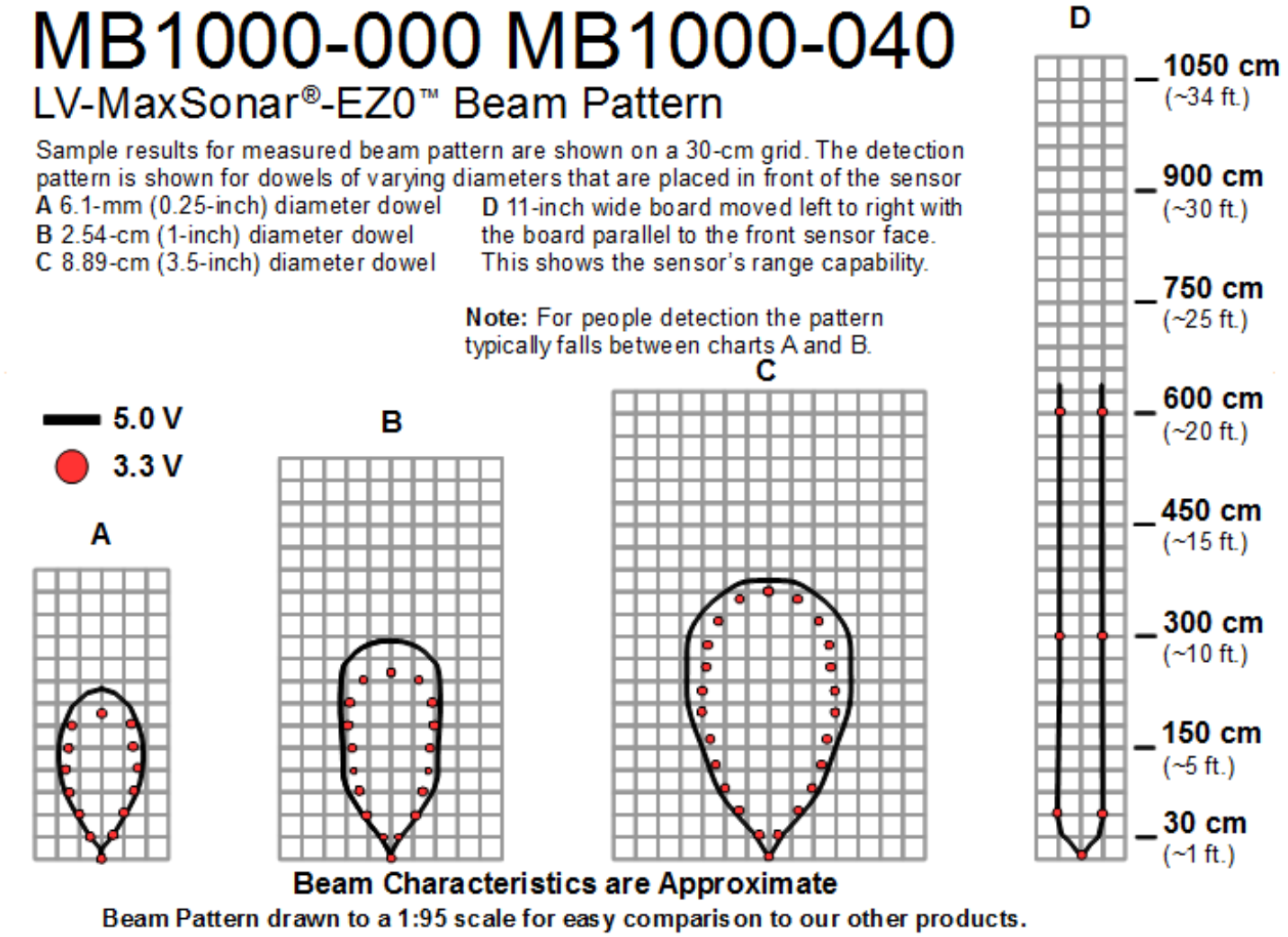

MB1000 Features and Benefits

- Widest and most sensitive beam pattern in LV-MaxSonar-EZ line
- Low power consumption
- Easy to use interface
- Will pick up the most noise clutter when compared to other sensors in the LV-MaxSonar-EZ line
- Detects smaller objects
- Best sensor to detect soft object in LV-MaxSonar-EZ line
- Requires use of less sensors to cover a given area
- Can be powered by many different types of power sources
- Can detect people up to approximately 10 feet

MB1000 Applications and Uses

- Great for people detection
- Security
- Motion detection
- Used with battery power
- Autonomous navigation
- Educational and hobby robotics
- Collision avoidance

Copyright 2005 - 2024 MaxBotix Incorporated Patent 7,679,996

MB1010 LV-MaxSonar-EZ1

The LV-MaxSonar-EZ1 is the original MaxSonar product. This is our most popular indoor ultrasonic sensor and is a great low-cost general-purpose sensor for a customer not sure of which LV-MaxSonar-EZ sensor to use.

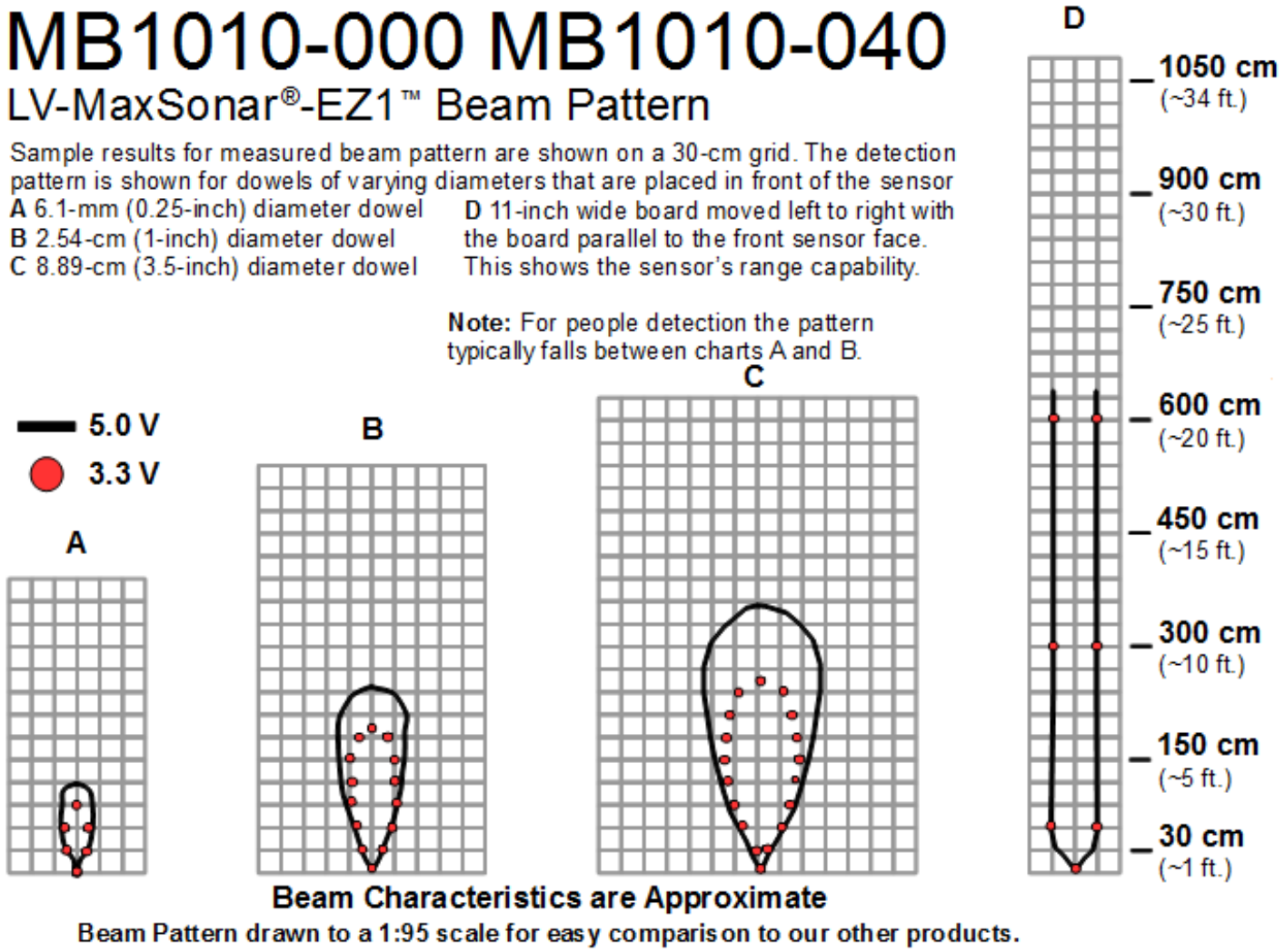

MB1010 Features and Benefits

- Most popular ultrasonic sensor
- Low power consumption
- Easy to use interface
- Can detect people to 8 feet
- Great balance between sensitivity and object rejection
- Can be powered by many different types of power sources

MB1010 Applications and Uses

- Great for people detection
- Security
- Motion detection
- Used with battery power
- Autonomous navigation
- Educational and hobby robotics
- Collision avoidance

Copyright 2005 - 2024 MaxBotix Incorporated Patent 7,679,996

MB1020 LV-MaxSonar-EZ2

The LV-MaxSonar-EZ2 is a good compromise between sensitivity and side object rejection. The LV-MaxSonar-EZ2 is an excellent choice for applications that require slightly less side object detection and sensitivity than the MB1010 LV-MaxSonar-EZ1.

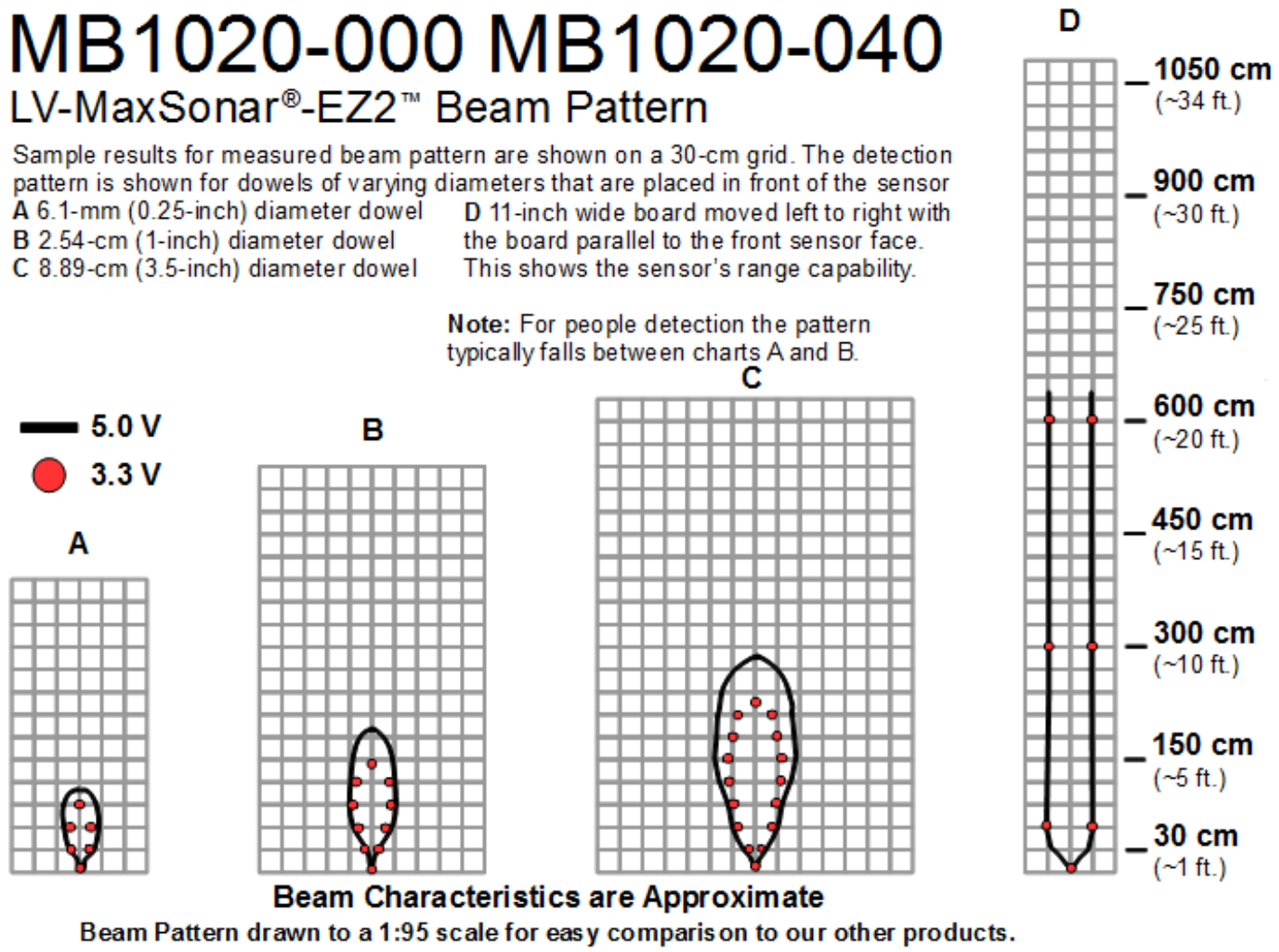

MB1020 Features and Benefits

- Great for applications where the MB1010 is too sensitive.
- Excellent side object rejection
- Can be powered by many different types of power sources
- Can detect people up to approximately 6 feet

MB1020 Applications and Uses

- Landing flying objects
- Used with battery power
- Autonomous navigation
- Educational and hobby robotics
- Large object detection

Copyright 2005 - 2024 MaxBotix Incorporated Patent 7,679,996

MB1030 LV-MaxSonar-EZ3

The LV-MaxSonar-EZ3 is a narrow beam sensor with good side object rejection. The LV-MaxSonar-EZ3 has slightly wider beam width than theMB1040 LV-MaxSonar-EZ4 which makes it a good choice for when the LV-MaxSonar-EZ4 does not have enough sensitivity for the application.

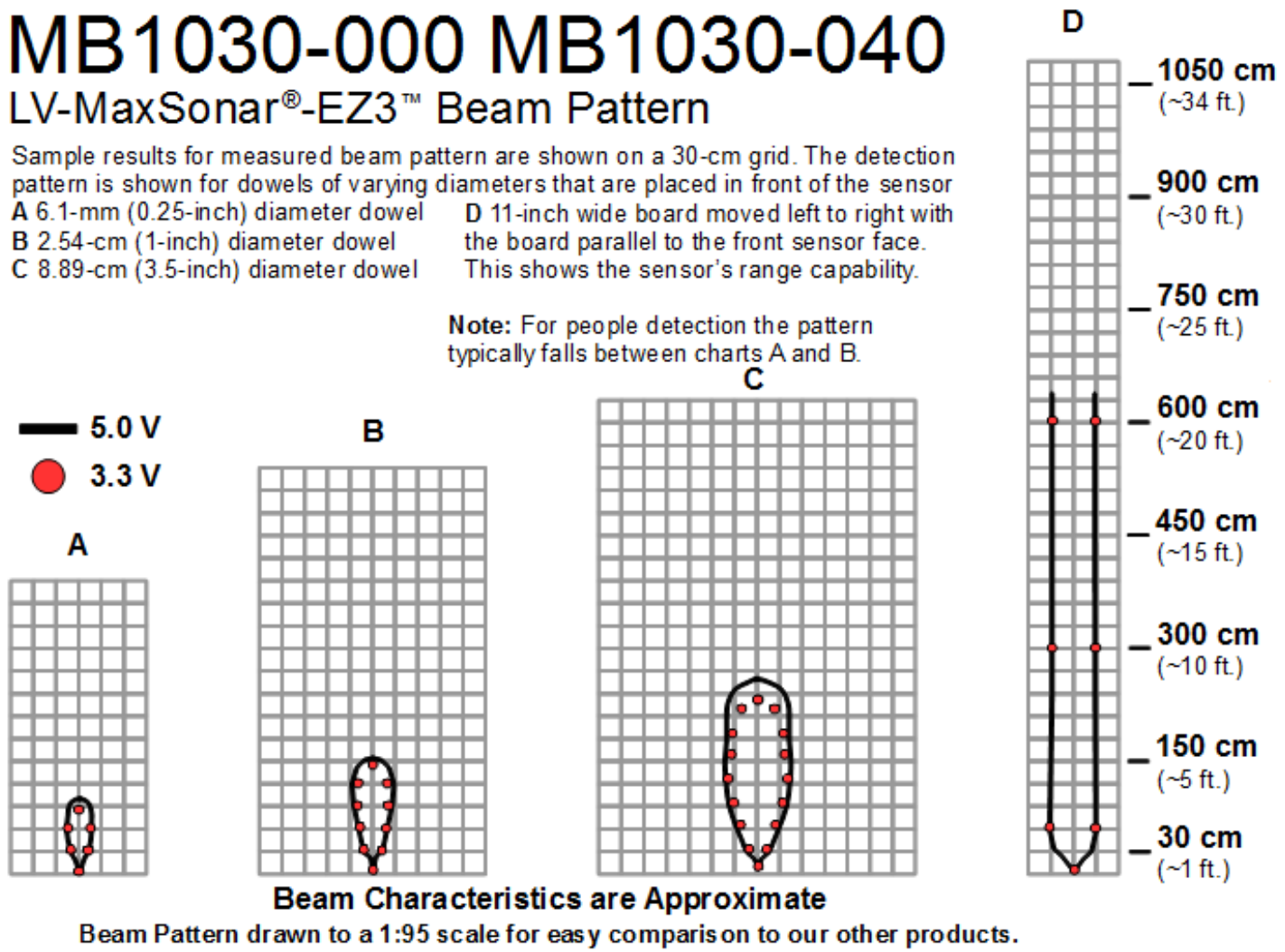

MB1030 Features and Benefits

- Excellent side object rejection
- Low power consumption
- Easy to use interface
- Great for when MB1040 is not sensitive enough
- Large object detection
- Can be powered by many different types of power sources
- Can detect people up to approximately 5 feet

MB1030 Applications and Uses

- Landing flying objects
- Used with battery power
- Autonomous navigation
- Educational and hobby robotics

Copyright 2005 - 2024 MaxBotix Incorporated Patent 7,679,996

MB1040 LV-MaxSonar-EZ4

The LV-MaxSonar-EZ4 is the narrowest beam width sensor that is also the least sensitive to side objects offered in the LV-MaxSonar-EZ sensor line. The LV-MaxSonar-EZ4 is an excellent choice when only larger objects need to be detected.

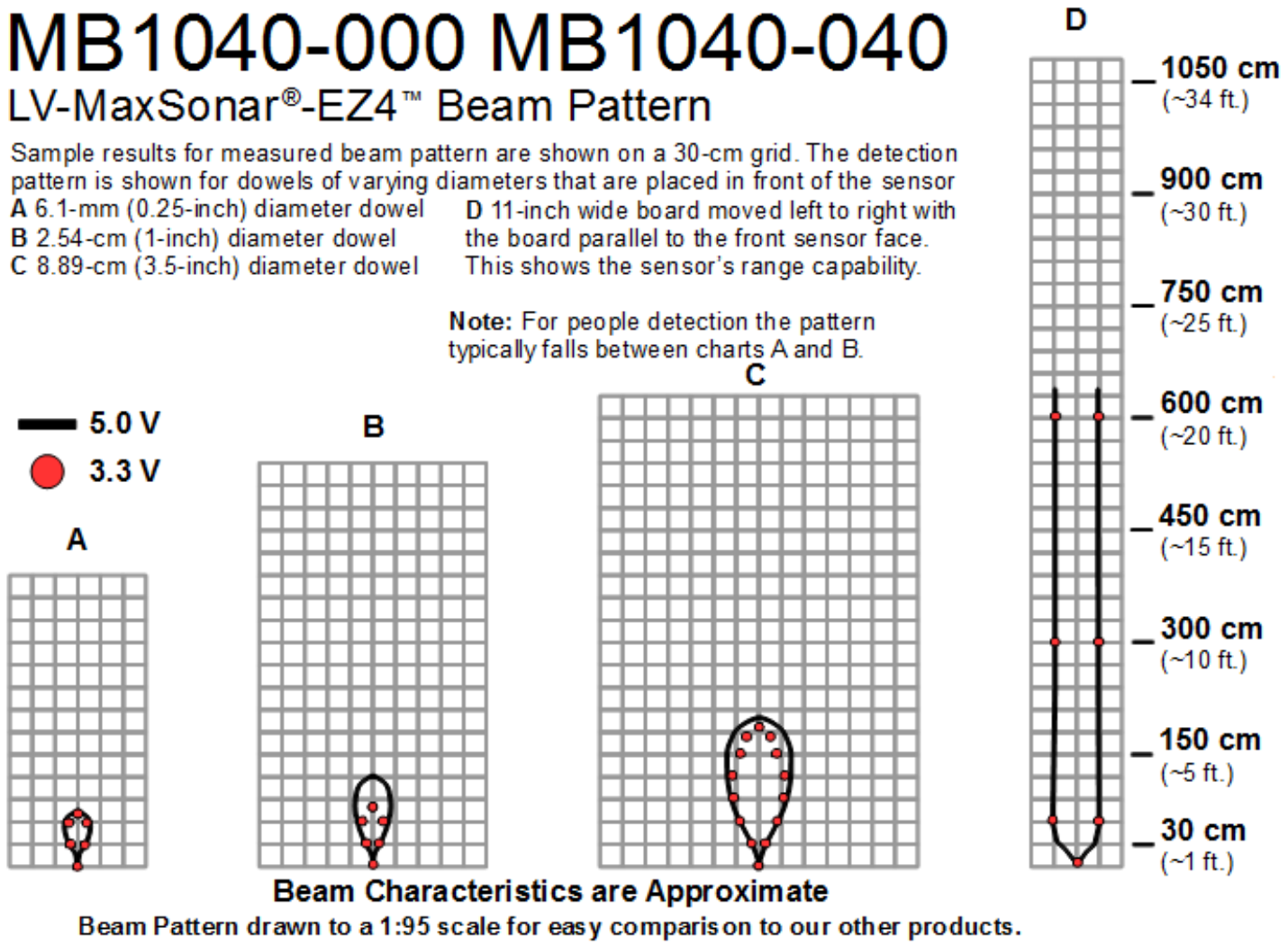

MB1040 Features and Benefits

- Best side object rejection in the LV-MaxSonar-EZ sensor line
- Low power consumption
- Easy to use interface
- Best for large object detection
- Can be powered by many different types of power sources
- Can detect people up to approximately 4 feet

MB1040 Applications and Uses

- Landing flying objects
- Used with battery power
- Autonomous navigation
- Educational and hobby robotics
- Collision avoidance

Copyright 2005 - 2024 MaxBotix Incorporated Patent 7,679,996

Part Numbers

All part numbers are a combination of a six-character base followed by a dash and a three-digit product code. Please review the following table for more information on the three-digit product code.

M	B	X	X	X	X	-	X	X	X
Base Number							Housing	Options	Connection Type

0	Not Applicable
1	3/4" NPS WR (Standard)
2	3/4" NPS WRC (Compact)
3	Ultra Compact
4	Ultra Compact Flush Mount
5	1" NPS
6	1" BSPP
7	30MM 1.5
8	Extended Horn
A	MB7974 Snap On Horn
B	90 Degree Horn
C	Infrared/Ultrasonic High Sensitivity Horn

0	No Options (Bagged)
1	F-Option
2	P-Option
3	F-Option and P-Option
4	No Options (Trayed)
5	TTL (Bagged)
6	TTL (Trayed)

0	No Options
1	7 Strand Wire Attached (MB7984) – 3ft Length
2	90 Degree 7 Pin Header
3	Straight 7 Pin Header
4	7 Pin Molex Connector
5	8 Pin M12 Connector with Cable – 3ft Length
6	7 Pin Screw Block Terminal
7	Radio Bridge Connector with Cable (MB7985) – 5ft Length
8	Custom Connector without Cable
9	Custom Connector with Cable
A	7 Strand Wire Attached (MB7984) – Custom Length
B	USB Connector with Cable (Style A) – 5M Length
C	USB Connector with Cable (Style C) – 5M Length
D	USB Connector with Cable (Style A) – 10M Length
E	USB Connector with Cable (Style C) – 10M Length
F	8 Pin M12 Connector with Cable - Custom Length
G	90 Degree Pin Connector (7 Pin)

The following table displays all of the active and valid part numbers for this product.

Active Part Numbers for MB1000, MB1010, MB1020, MB1030, MB1040, MB1060 and MB1061					
MB1000-000	MB1010-000	MB1020-000	MB1030-000	MB1040-000	MB1060-000
MB1000-040	MB1010-040	MB1020-040	MB1030-040	MB1040-040	MB1061-000

Copyright 2005 - 2024 MaxBotix Incorporated Patent 7,679,996

After reviewing this datasheet, do you have any more questions?

We offer Technical Support on all of our products even if you purchased them through one of our many vendors worldwide.

You can **fill out a Technical Support form** for assistance on a sensor here --> **Technical Support**

Not sure which sensor you need for your application?

We offer Sensor Selection Assistance, click the link here to fill out a form for support --> **Sensor Selection Help**

Looking for tutorials to help you get started?

Frequently Asked Questions about Our Sensors

We receive many questions about our products and services. This resource offers answers to common inquiries we receive about our product lines and their application.

Fully Calibrated Beam Patterns

All of our sensors are factory calibrated to provide consistent beam patterns, detection zones, to fit into a wide variety of applications. In our product lines, each model number comes with a different beam pattern that reflects the sensitivity and the detection zone of how it sees a target. Additionally, we strive to maintain consistency between our finished products, and you will see little to no deviation between sensors of the same model. This allows you to have confidence in your final application when using multiple sensors.

Understanding Range Readings

The success of an application may hinge upon knowing the exact location of a target. However, a sensor may report one meter even if the target is not exactly one meter away from the sensor. Sensor specifications, such as resolution, precision, and accuracy, help you to understand sensor performance.

How to Use Multiple Ultrasonic Sensors

This guide covers three ways to run your sensors in a Multiple Sensor environment and issues you may face.

Contact us now with any questions at sensors@maxbotix.com or call +1-218-454-0766.

Please call during our preferred business hours of 8:00 am – 4:30 pm CST on Monday through Thursday and 8:00 am – 2:00 pm CST on Friday, or you may leave us a voicemail anytime.

Copyright 2005 - 2024 MaxBotix Incorporated Patent 7,679,996