ECGR4146/5146 - Intro to VHDL (Spring 2026)

Final Project (UART Design)

Instructor: Fareena Saqib

Due Date: 04/28/26 (Tuesday)

Points : 100

Objective:

In this assignment, you will design and implement a Universal Asynchronous Receiver/Transmitter (UART) subsystem using VHDL. You will work on the transmission and reception of serial data and implement an interface circuit utilizing a register and later upgrade it using FIFO buffer.

Register based Uart Receive and UART transmitter are shown below:

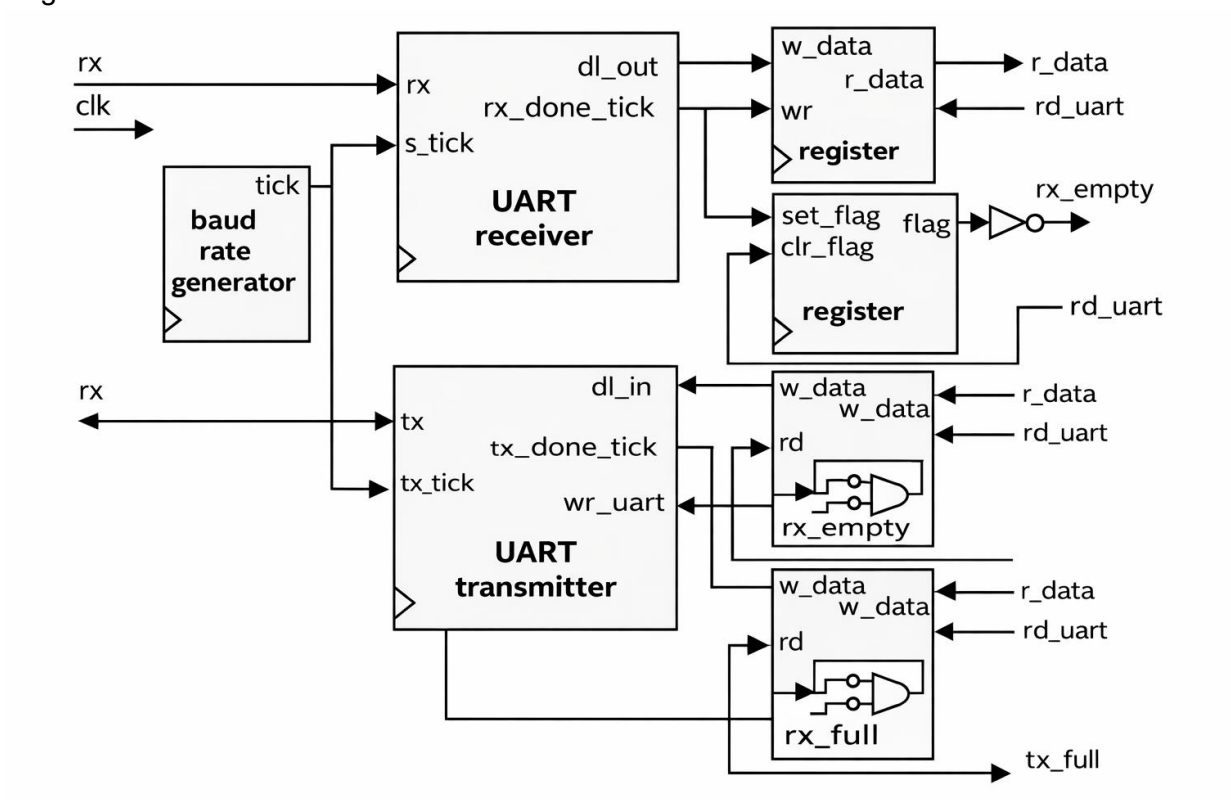

Project Modules

1. **UART Subsystem**
   - Implement the Receiver subsystem
   - Implement the Transmitter subsystem
   - Design and integrate the interface circuit with the FIFO buffer.
2. **Finite State Machine (FSM) for Data Processing**
   - Develop an FSM to read bytes from the receiver subsystem.
   - Write data into memory (each row storing 32 bits or 4 bytes).
   - Generate control signals for memory write operations.
3. **Memory Read-back Functionality**
   - Implement the ability to read back stored data from memory to the host machine.
4. **Design Classification Engine**
   - Implement a classification engine for UART communication.

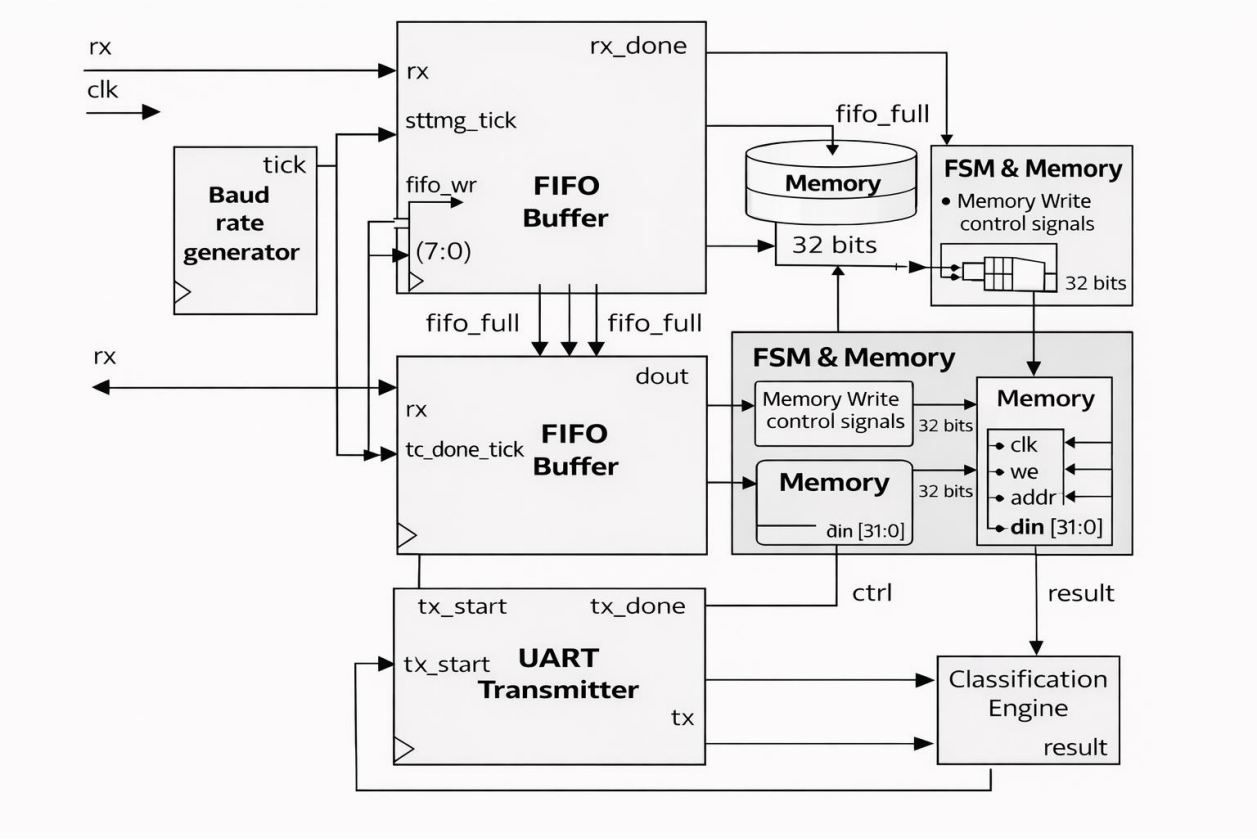

Milestones & Deadlines

Milestone	Description	Due Date
Baud Rate Generator	Design the baud rate generator and testbench verification	March 25
Receiving Subsystem	Implement and test the receiving subsystem	April 01st
Interface Circuit	Develop two interface circuit designs: Register & Flag-based and FIFO-based	April 08th
State Machine Design	Implement FSM for memory write operations, that includes 1) data from FIFO to RAM. 2) Write the results of classification to RAM.	April 15th
Transmitter Implementation	Implement and test the transmitter subsystem, transmitter sends the results (classifications back to the Tx line.)	April 22nd
Classification Engine	Design the Classification Engine	April 24th
Final Presentation	Demonstrate project functionality in class	April 28, 29 & 30th project demos and submission

---

Deliverables

1. **Project Implementation**
    - 0 Complete Receiver, Transmitter, and Interface circuit designs.
    - Implement code transmission to memory.
    - Develop four program modes:
        - Write a program into memory.
        - FSM to read bytes from the receiver and generate memory write control signals.
        - Data paths for writing into memory.

        - Read back the program from memory to host.
2. **Project Report**
    - Document system design, implementation, and test results.
    - Explain FSM operation and control signals.
    - Describe challenges encountered and solutions applied.
3. **Project Archive**
    - Submit a complete project folder with VHDL code, testbenches, and documentation.
4. **Project Presentation**
    - Demonstrate the working system in class.

Grading Criteria

- **Implementation Accuracy (40%)** - Proper functioning of UART system, including transmitter, receiver, and interface circuit.
- **Classification Engine (10%)** - Successful implementation of the classification engine.
- **Code Quality & Testbench (20%)** - Clean and well-structured VHDL code with appropriate testbenches.
- **Report Quality (20%)** - Clear documentation of design, methodology, and results.
- **Presentation & Demonstration (10%)** - Effectiveness in explaining the project.

Submission Guidelines

- Submit all VHDL source files, testbenches, and documentation in a compressed project folder.
- Late submissions will be subject to a grade penalty.

Good luck!