Single-Image Depth Estimation

Pose Estimation

December 2024

Alberto Rota

© 2021 Asensus Surgical, Inc.

Visual Odometry / Pose Estimation

Camera Pose Estimation Task:

Previous Frame

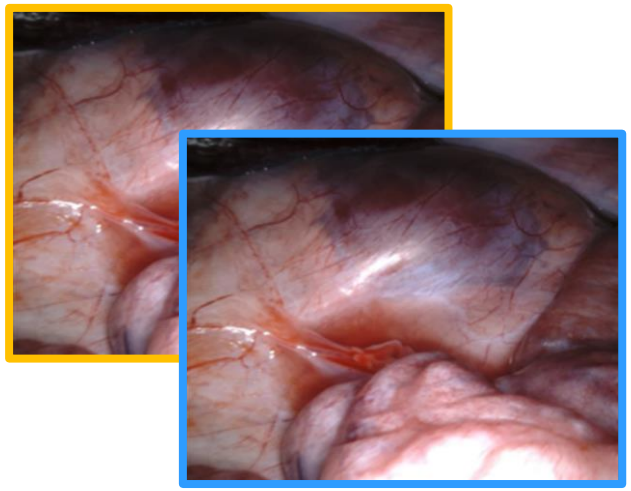

Current Frame

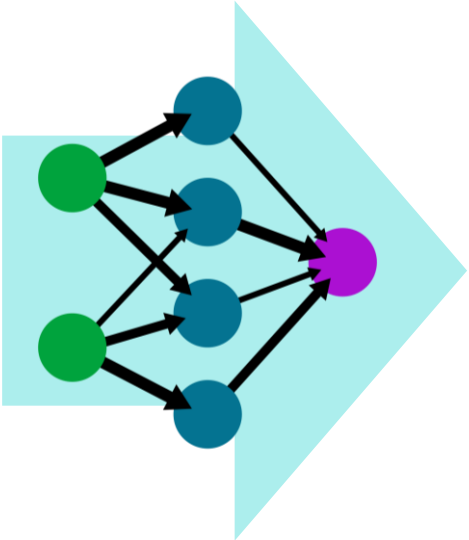

6D Pose :

Translation + Rotation

Jointly trained with Depth Estimation Network to achieve **camera-agnostic** monocular depth estimation

© 2021 Asensus Surgical, Inc.

Pose Estimation Net

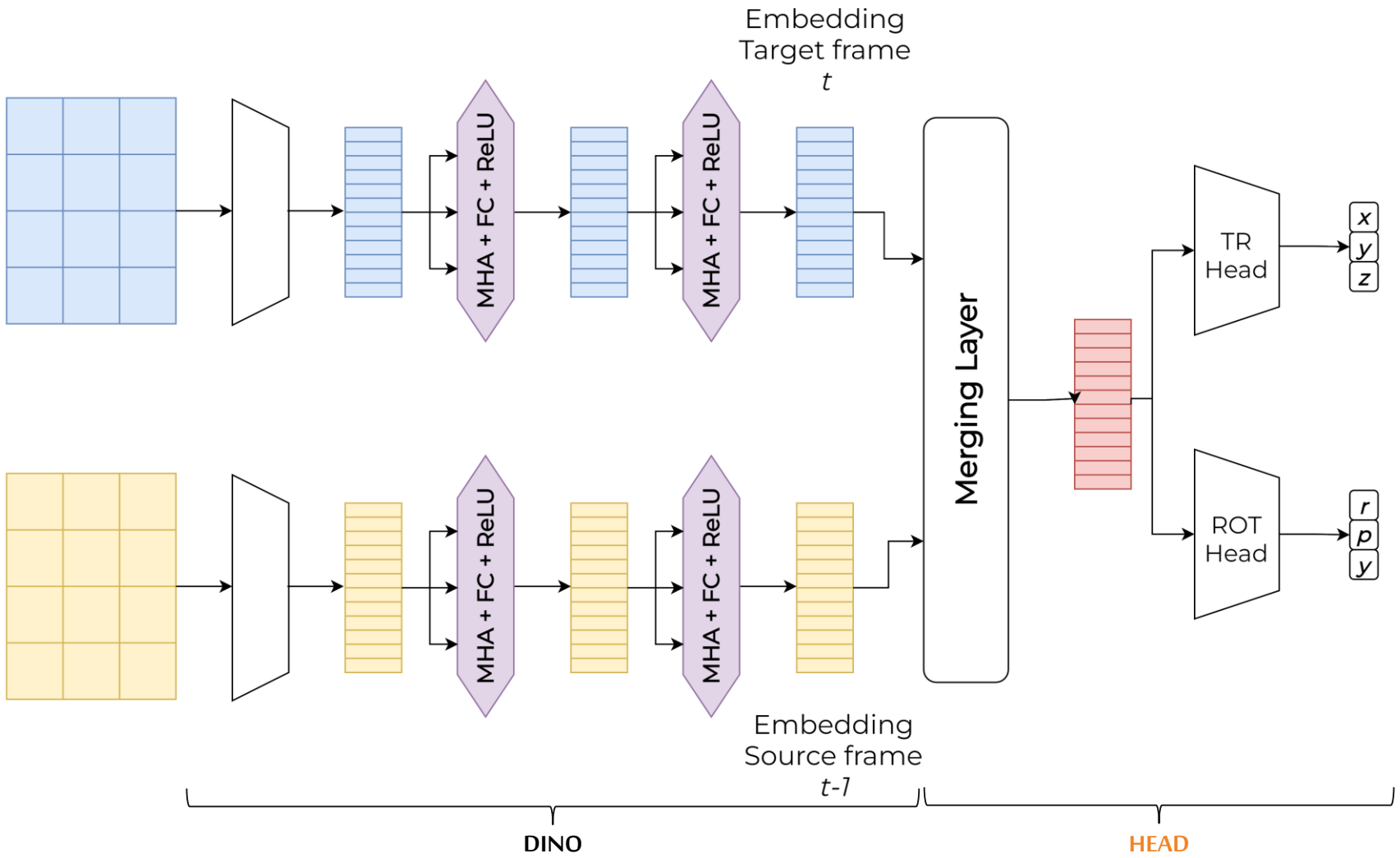

© 2021 Asensus Surgical, Inc.

Pose Estimation Net

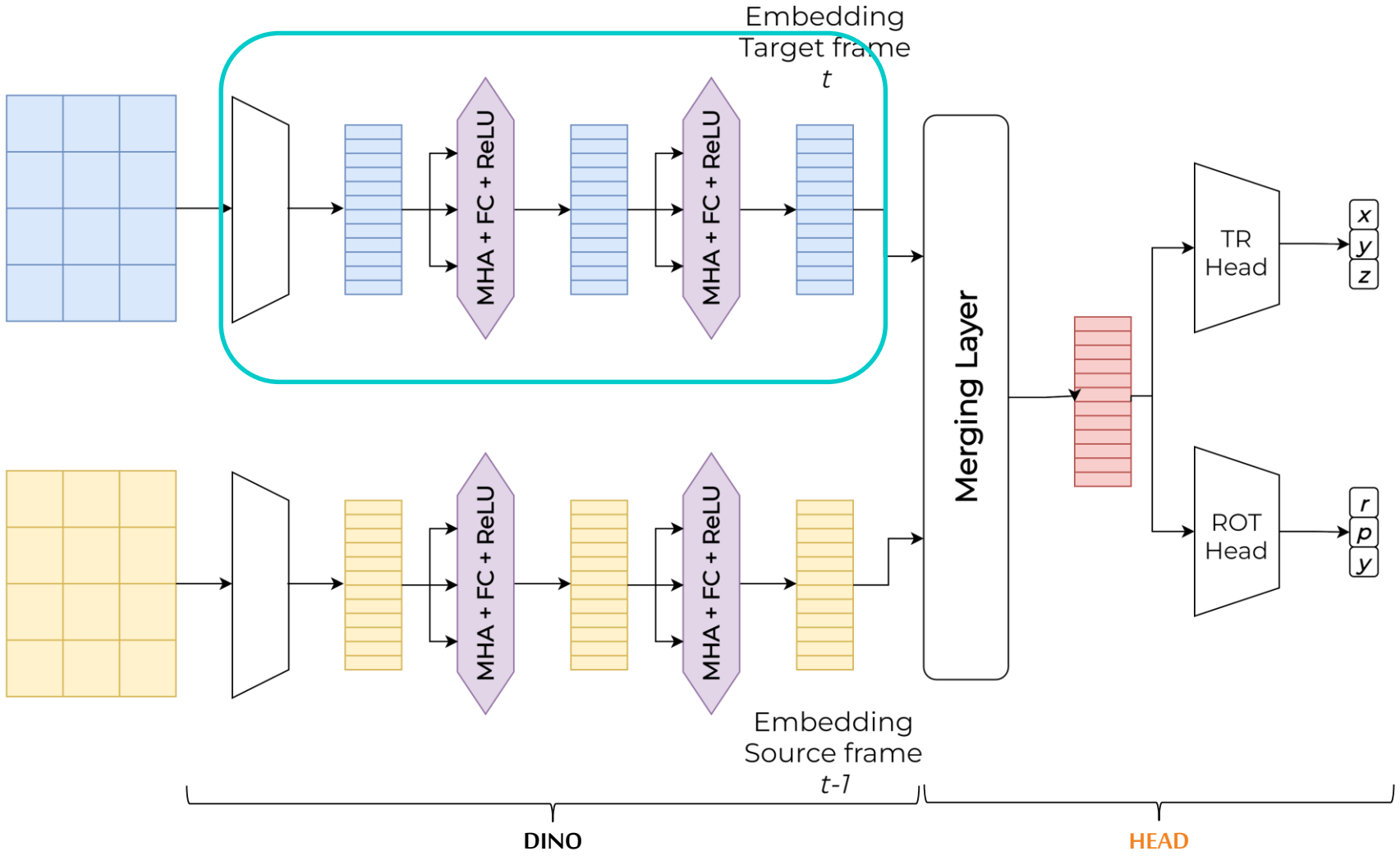

Backbone:

→ **DINOv2**

Shares weights with the backbone of the depth estimation task

© 2021 Asensus Surgical, Inc.

Pose Estimation Net

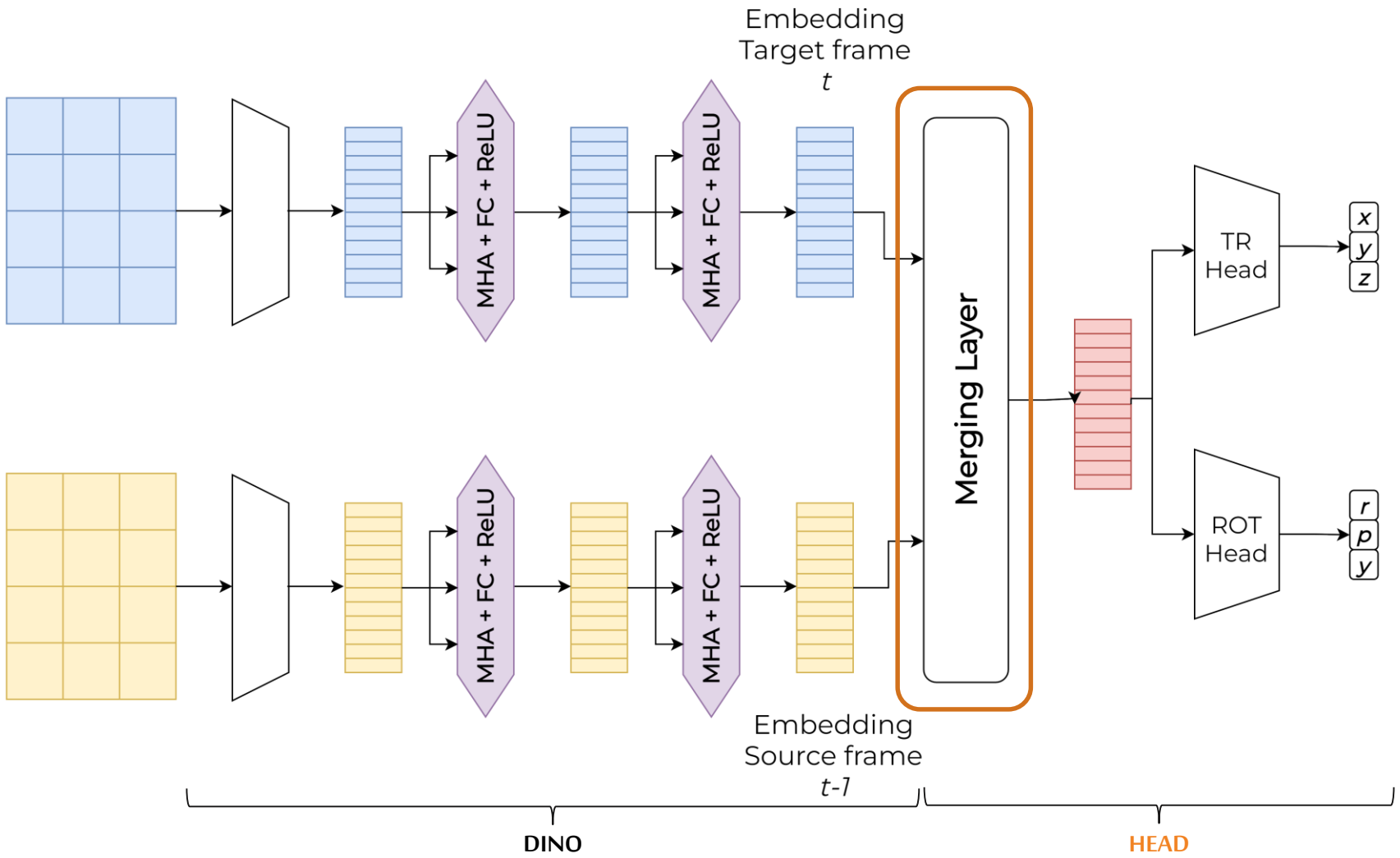

Hidden state combining

→ **Concatenate**

→ **Linear**

→ **Attention**

Combines the embedding of the two images into a **paired** embedding

© 2021 Asensus Surgical, Inc.

Pose Estimation Net

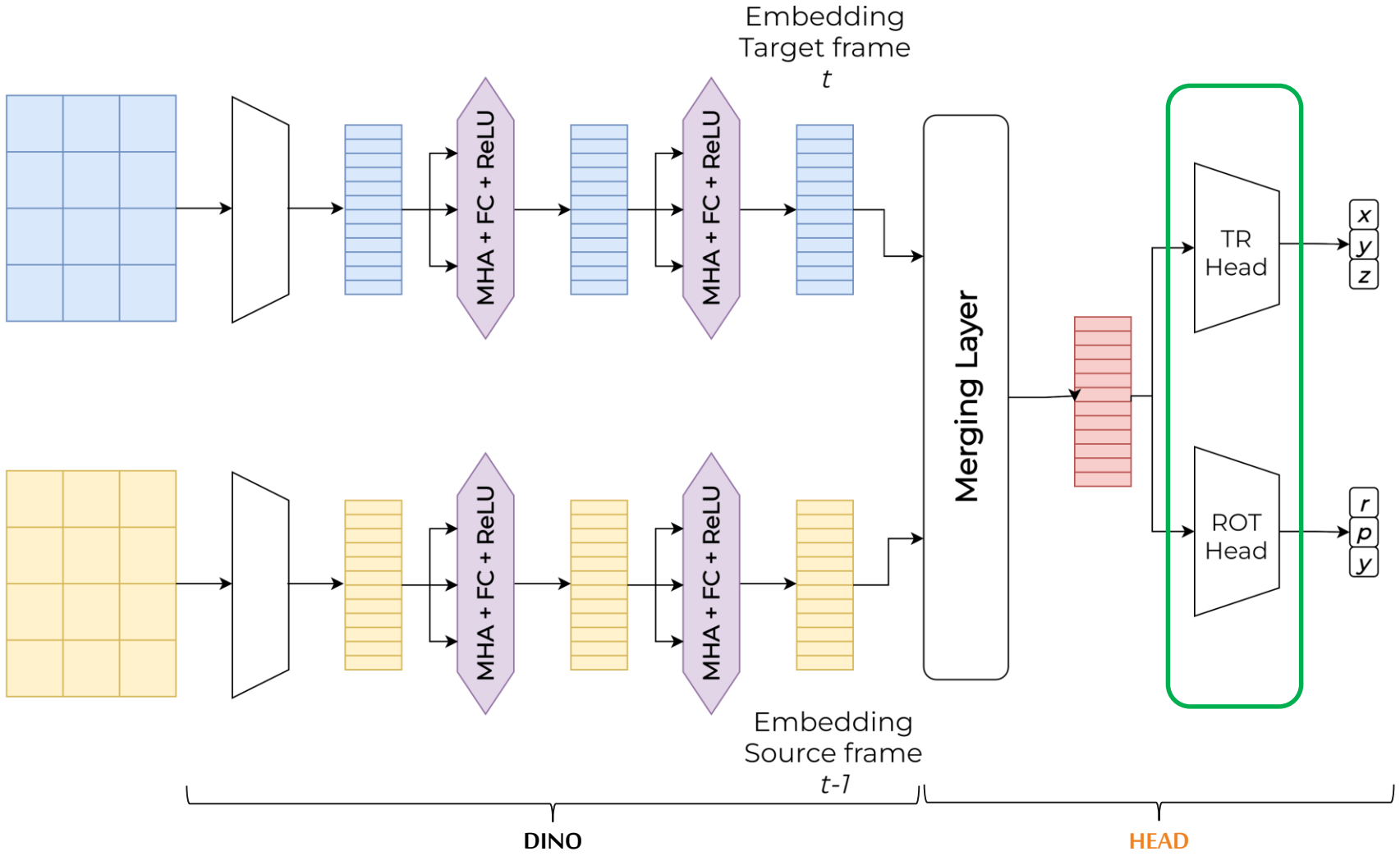

Regression Heads

→ **MLP**

Predicts translation and rotation of the camera

Separate heads [each head to $\mathbb{R}^3$] perform better than single head to $\mathbb{R}^6$

© 2021 Asensus Surgical, Inc.

Evaluation

Dataset

EndoVis → 26 Videos of porcine anatomy annotated with camera poses at each frame (2 vids with invalid data)

Split

Stratification on Videos:

70% Training → 16 Videos

20% Validation → 5 Videos

10% Test → 3 Videos

Metrics

- Point-wise MSE → To evaluate network performance
- Trajectory-wise MSE → To evaluate error accumulation

© 2021 Asensus Surgical, Inc.

Results

© 2021 Asensus Surgical, Inc.

Overfitting : Parameters

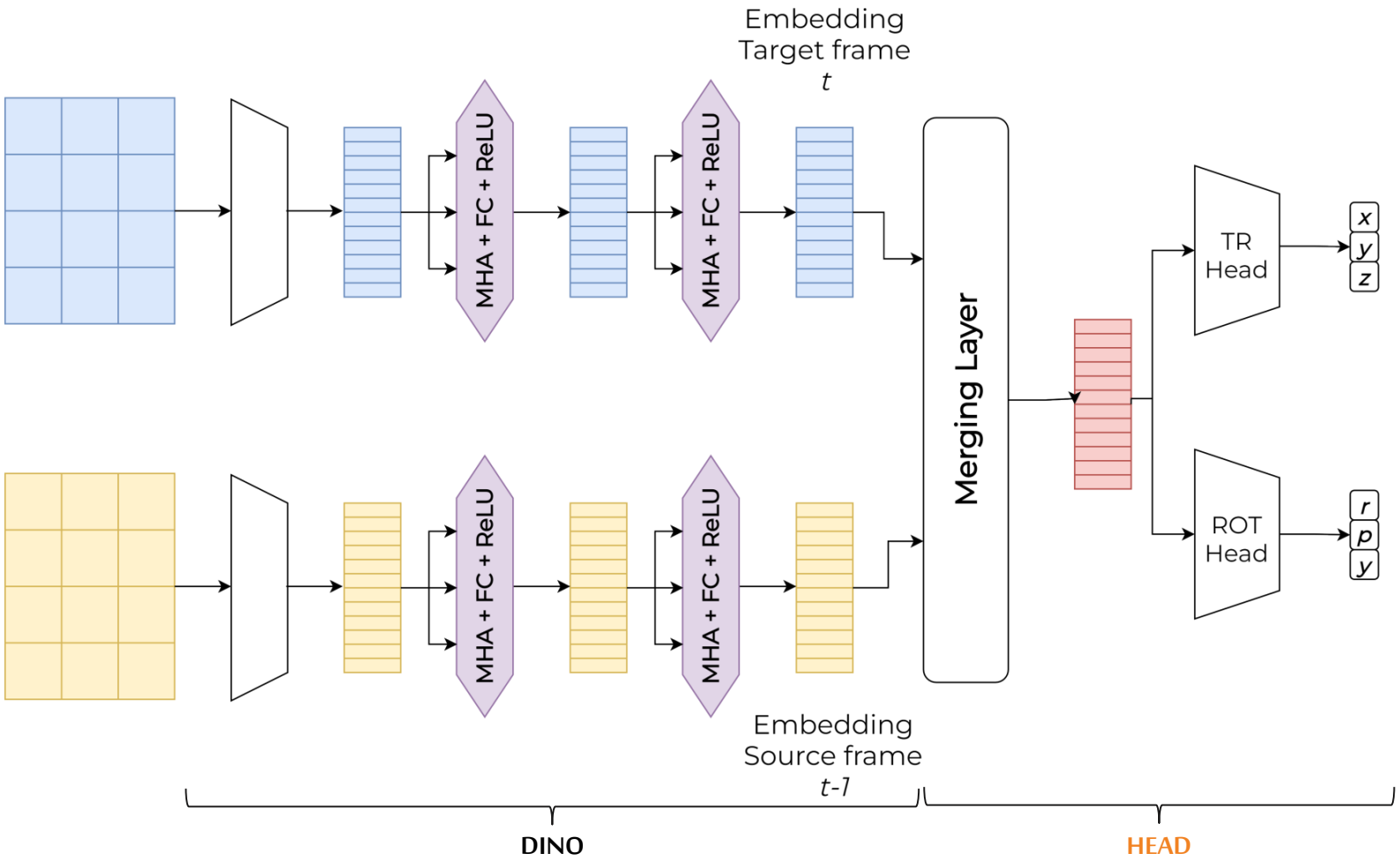

22M params - Frozen

~**2M** params - Trainable

© 2021 Asensus Surgical, Inc.

Overfitting : Countermeasures

1. **Model Architecture → Swin-T**

Localized attention + small window size

BUT pretrained Swin-T has more parameters (untrainable)

→ Should improve generalization

2. **Model Architecture → Merging at multiple hidden state**

Will allow to better capture local (first stages) and global (deeper stages) features

© 2021 Asensus Surgical, Inc.

Overfitting : Multi-Stage Merging

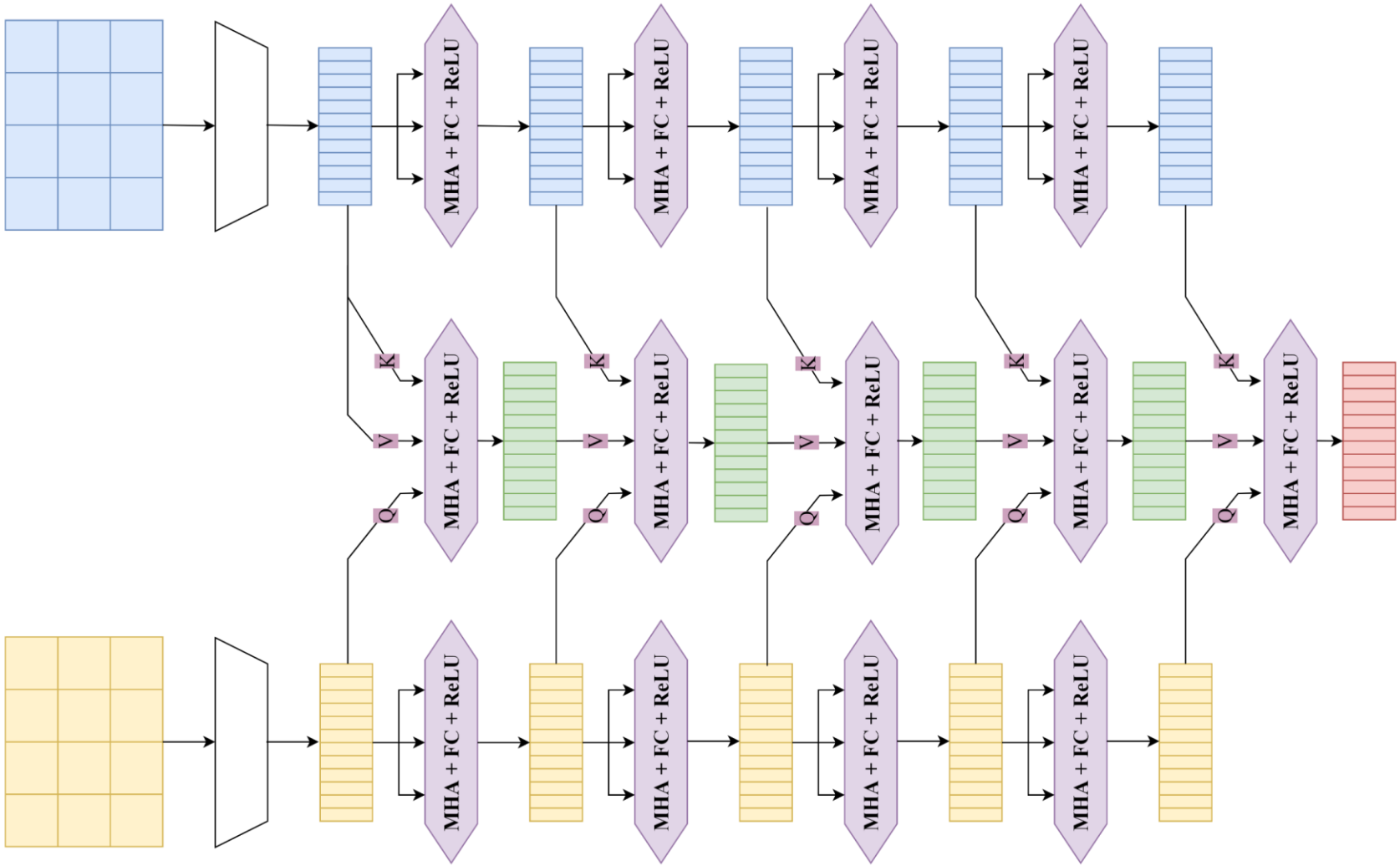

© 2021 Asensus Surgical, Inc.

Overfitting : Countermeasures

1. **Model Architecture → Swin-T**

Localized attention + small window size

BUT pretrained Swin-T has more parameters (untrainable)

→ Should improve generalization

2. **Model Architecture → Merging at multiple hidden state**

Will allow to better capture local (first stages) and global (deeper stages) features

3. **Augmentation**

Can only employ **colour** augmentation

→ Saturation, Brightness, Sharpness, Blur

NO geometric augmentation (?)

© 2021 Asensus Surgical, Inc.

Next Steps

- Train with SwinT
- Solve Overfitting

- Integration of Depth Estimation and Pose Estimation

→ Finalized monocular framework

Project Objectives? Milestones? Next Steps?

© 2021 Asensus Surgical, Inc.