# Single-Image Depth Estimation

Pose Estimation

*February 2024*

*Alberto Rota*

© 2021 Asensus Surgical, Inc.

# Self-Supervised Depth Estimation

From the previous frame

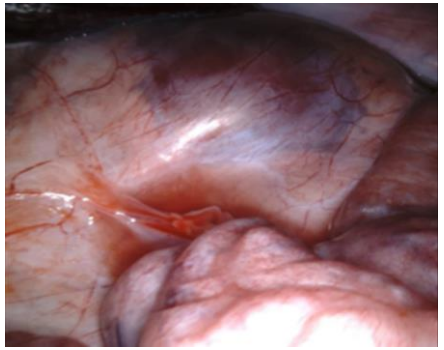

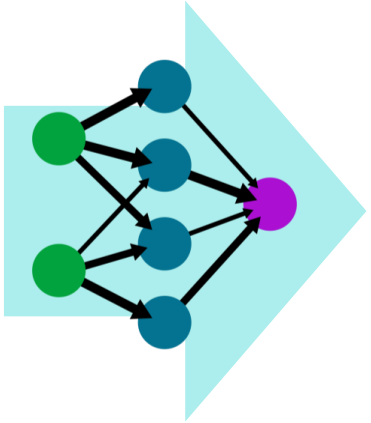

Predict the depthmap

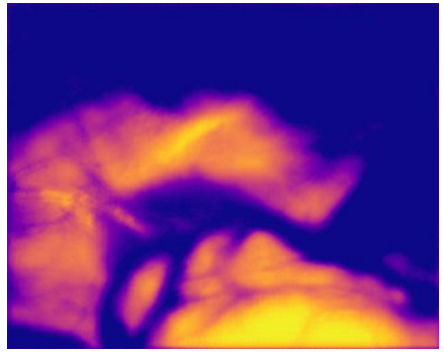

And with the Intrinsic $K$

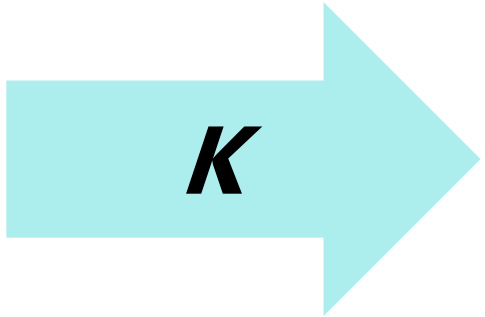


Get a RGB 3D point cloud

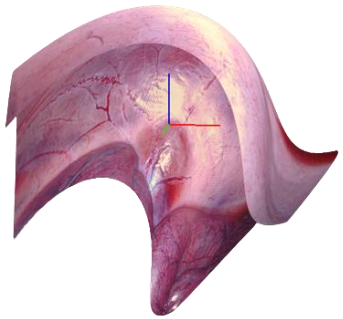

From the point cloud

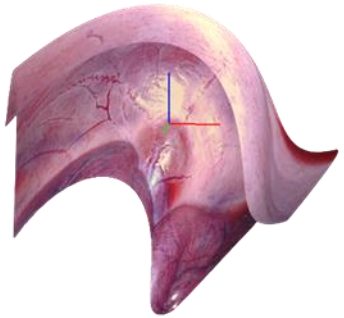

The Inverse Intrinsics and the camera motion

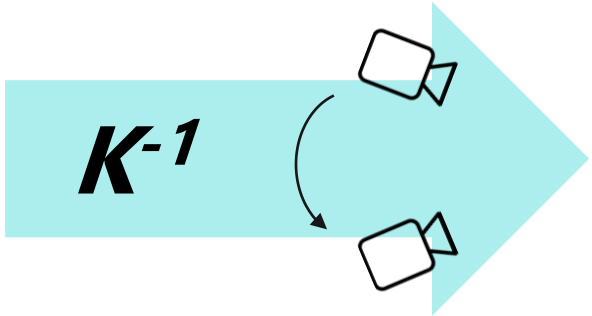


Synthetize the current frame

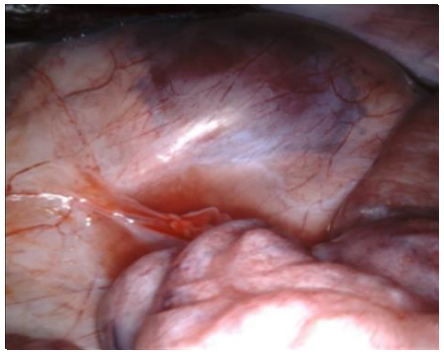

The only source of error is the one made estimating the depthmap

**Use this error as a loss function to Train the model**

© 2021 Asensus Surgical, Inc.

# Depth Estimation Model Architecture

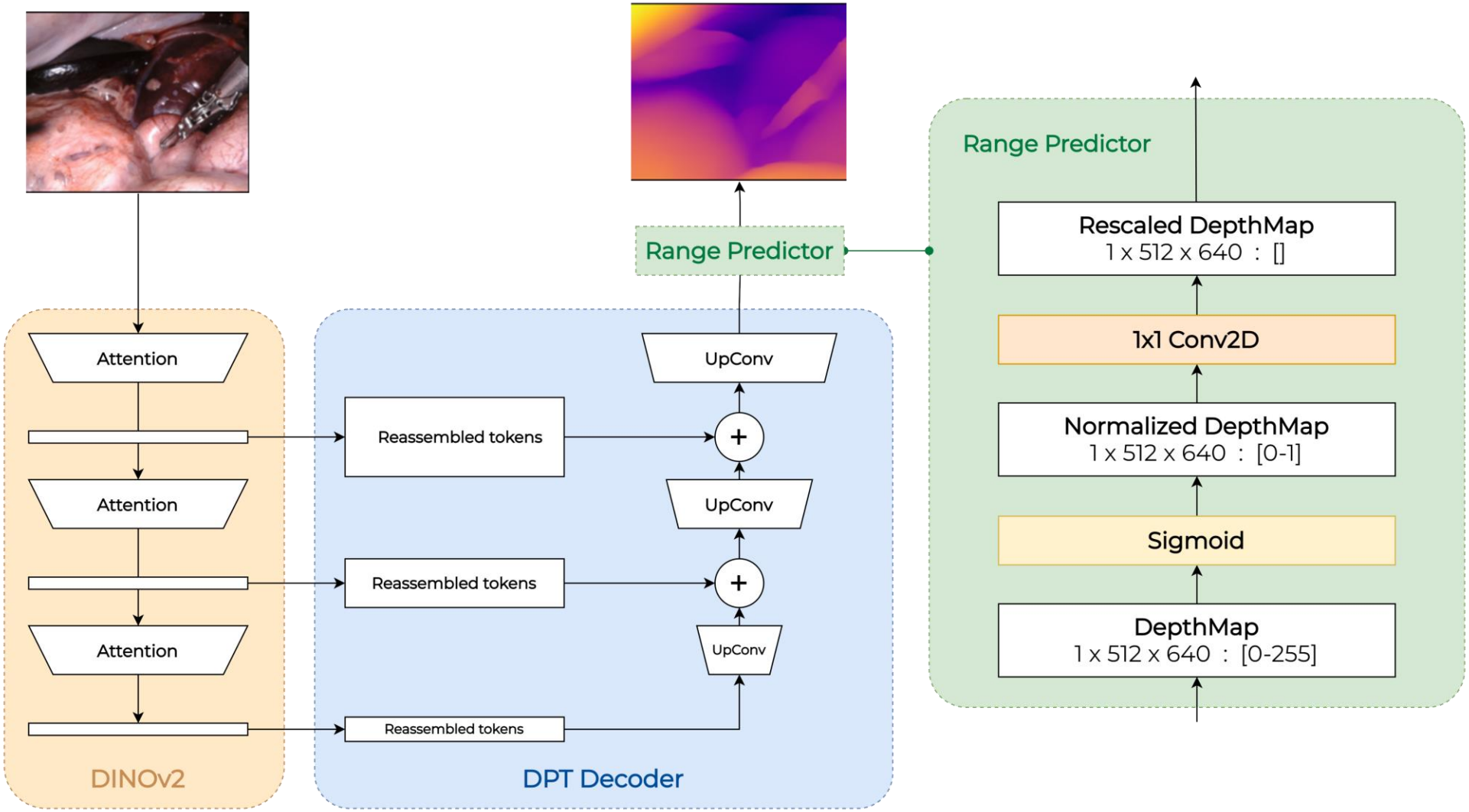


**Scale Preservation Layer**
To avoid depth distortions

© 2021 Asensus Surgical, Inc.

# Results

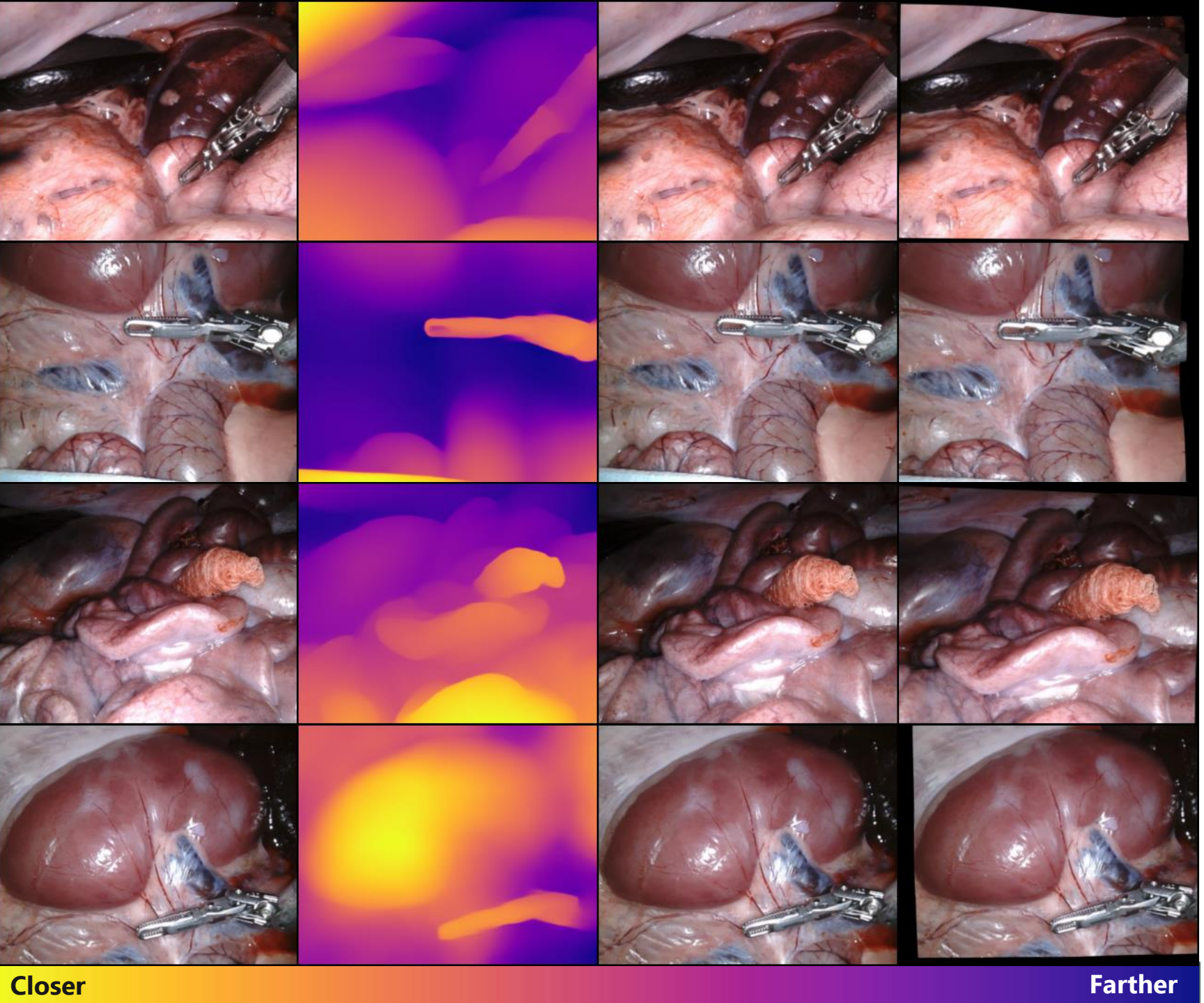


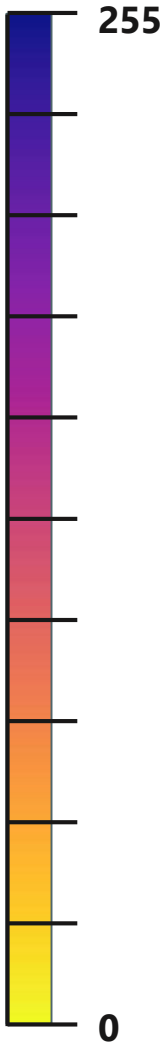


© 2021 Asensus Surgical, Inc.

# Visual Odometry / Pose Estimation

Camera Pose Estimation Task:

Previous Frame

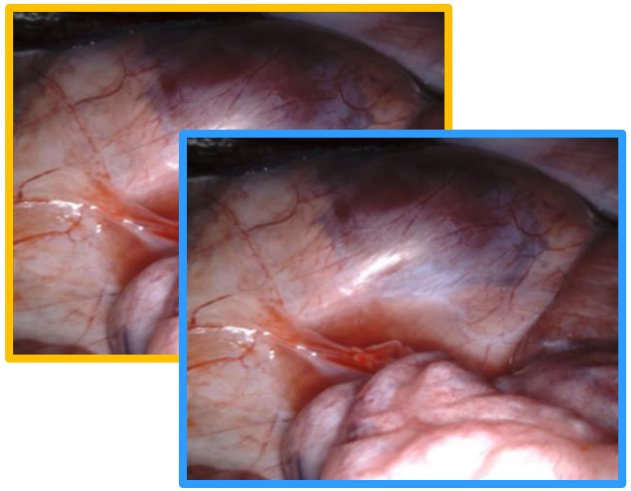

Current Frame

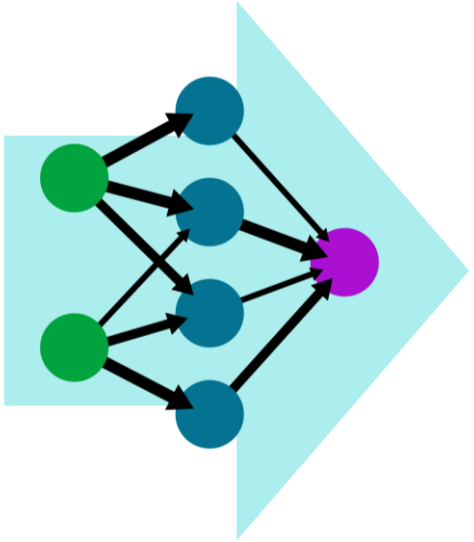

6D Pose :
Translation + Rotation

Jointly trained with Depth Estimation Network to achieve **camera-agnostic** monocular depth estimation

© 2021 Asensus Surgical, Inc.

# Pose Estimation Network Architecture

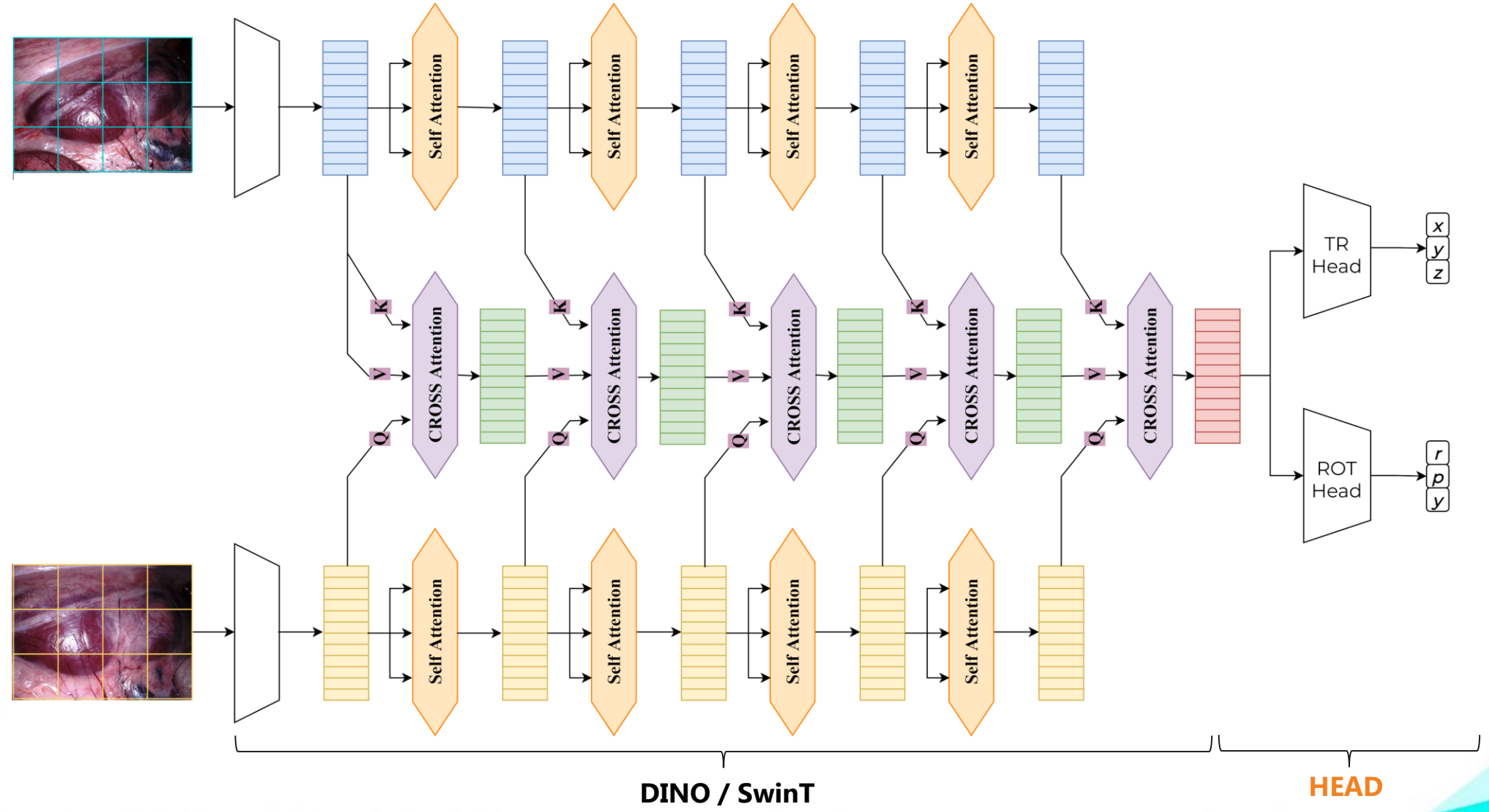


© 2021 Asensus Surgical, Inc.

# Pose Estimation Network Architecture

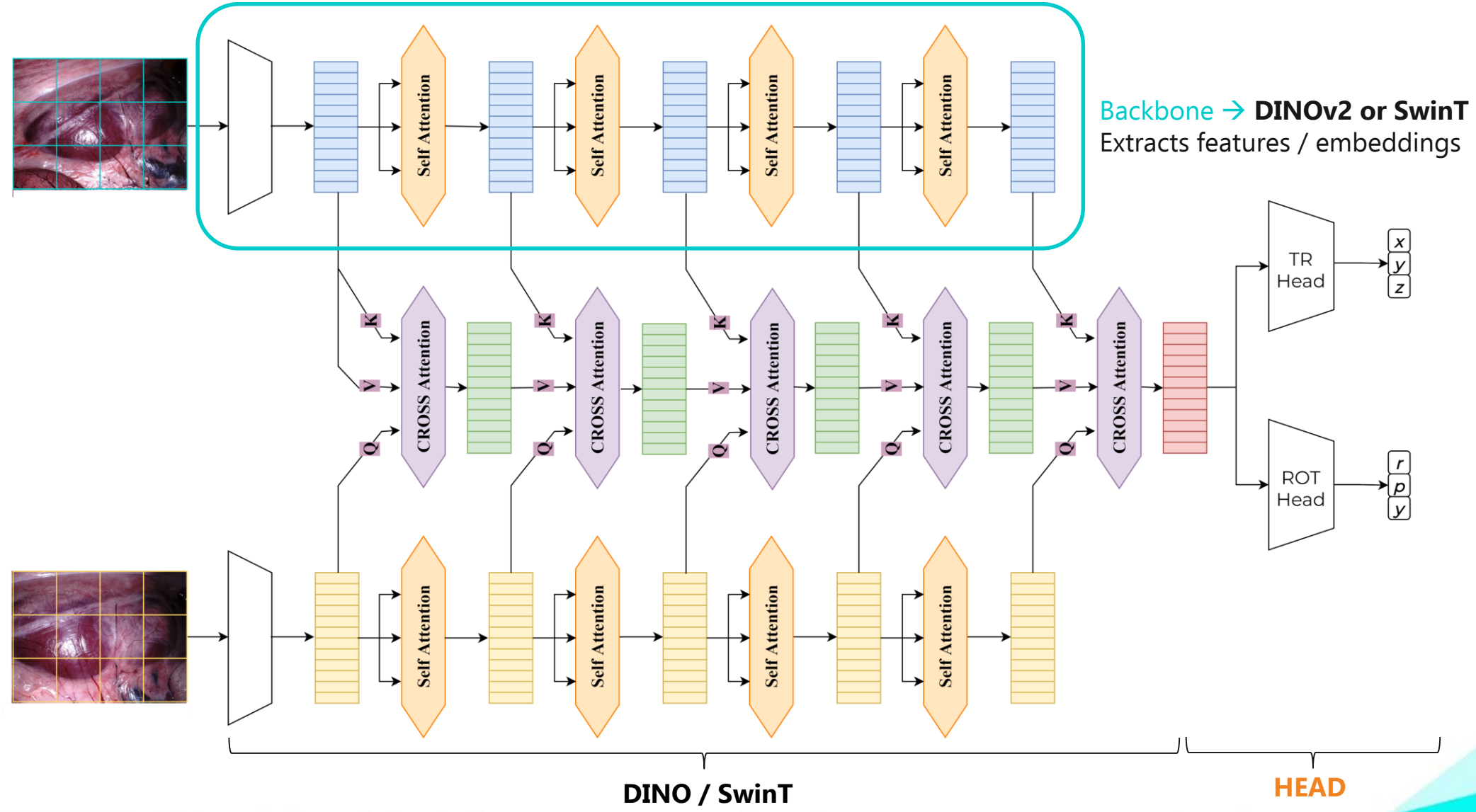


Backbone → **DINOv2 or SwinT**
Extracts features / embeddings

© 2021 Asensus Surgical, Inc.

# Pose Estimation Network Architecture

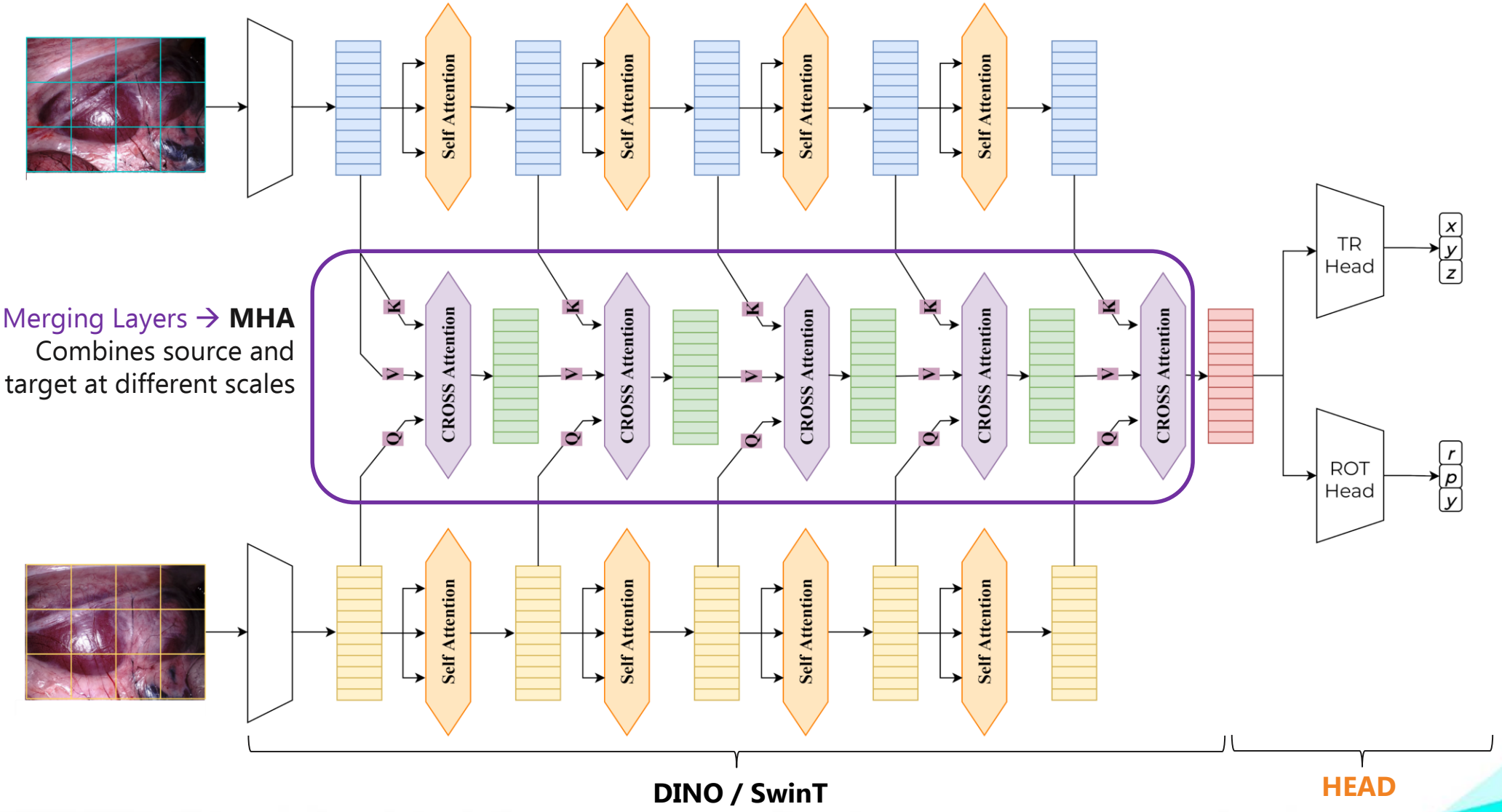


Merging Layers → **MHA**
Combines source and target at different scales

© 2021 Asensus Surgical, Inc.

# Pose Estimation Network Architecture

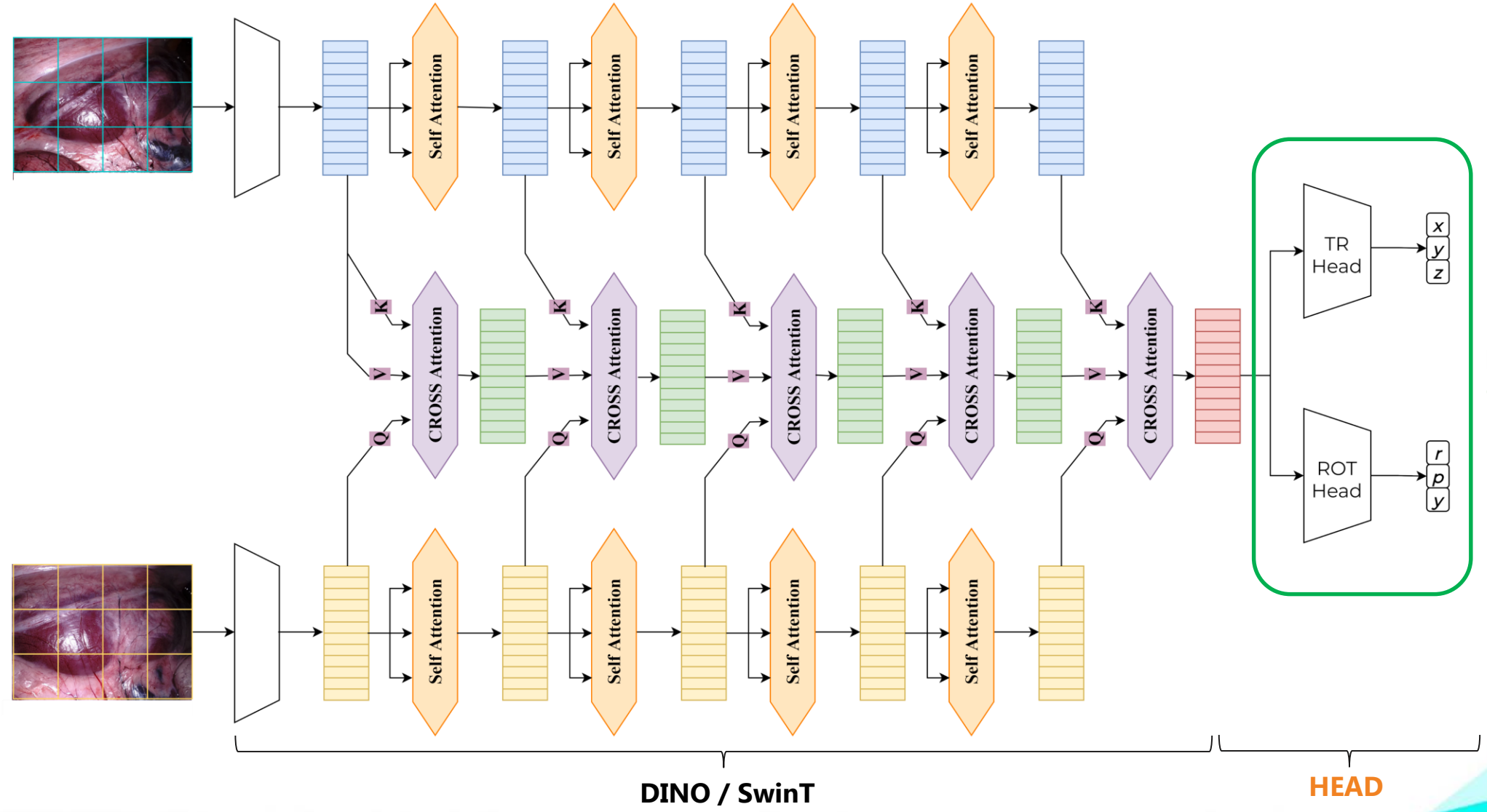


Regression Heads
→ **MLP + GELU**

© 2021 Asensus Surgical, Inc.

# Evaluation

**Dataset**
EndoVis → 26 Videos of porcine anatomy annotated with camera poses at each frame (2 vids with invalid data)

**Split**
Stratification on Videos:
70% Training → 16 Videos
20% Validation → 5 Videos
10% Test → 3 Videos

**Augmentation**
→ Few annotated videos
→ Color + **Geometry** augmentation (tricky)

© 2021 Asensus Surgical, Inc.

# Geometry augmentation: FLIPPING

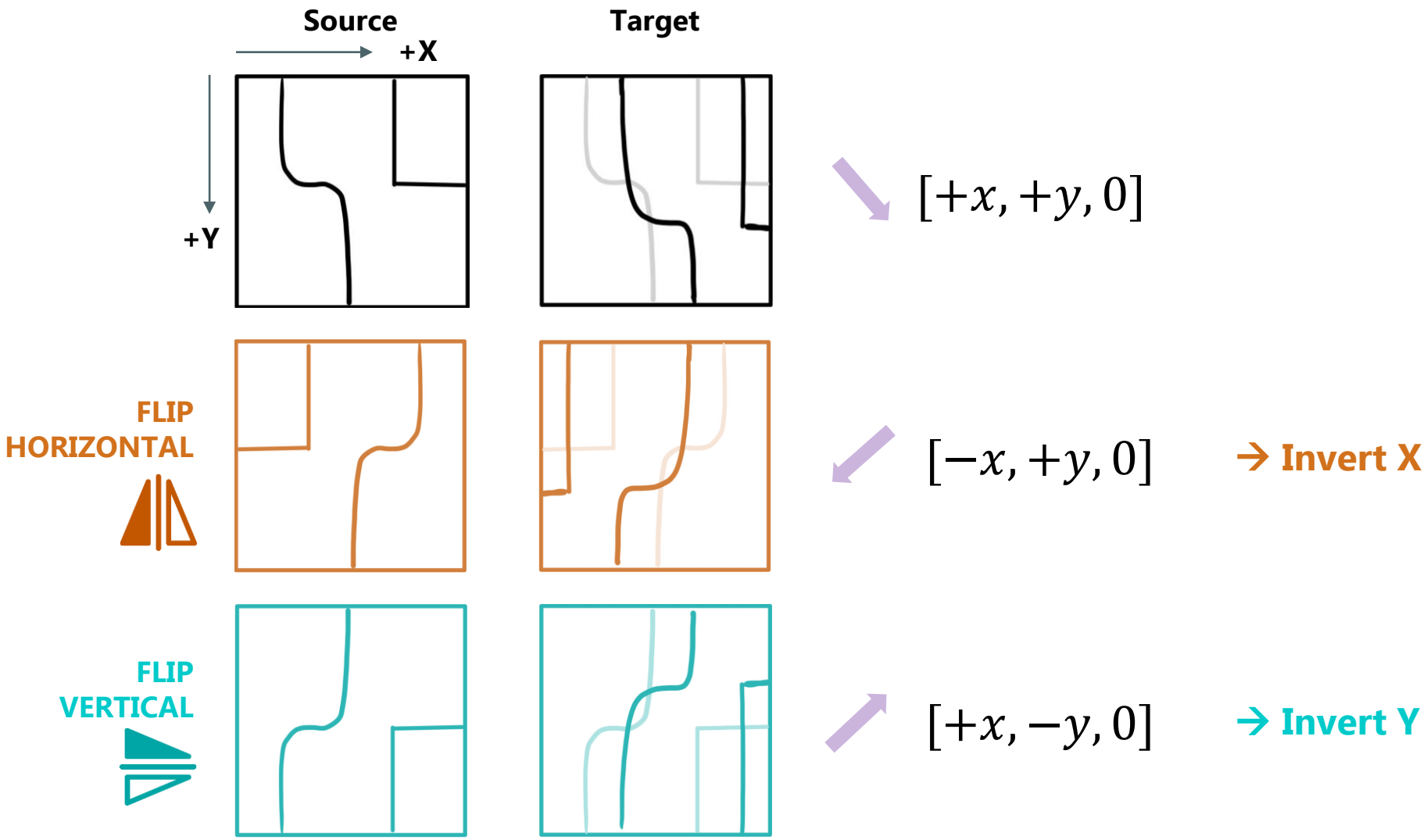


© 2021 Asensus Surgical, Inc.

# Geometry augmentation: ROTATION

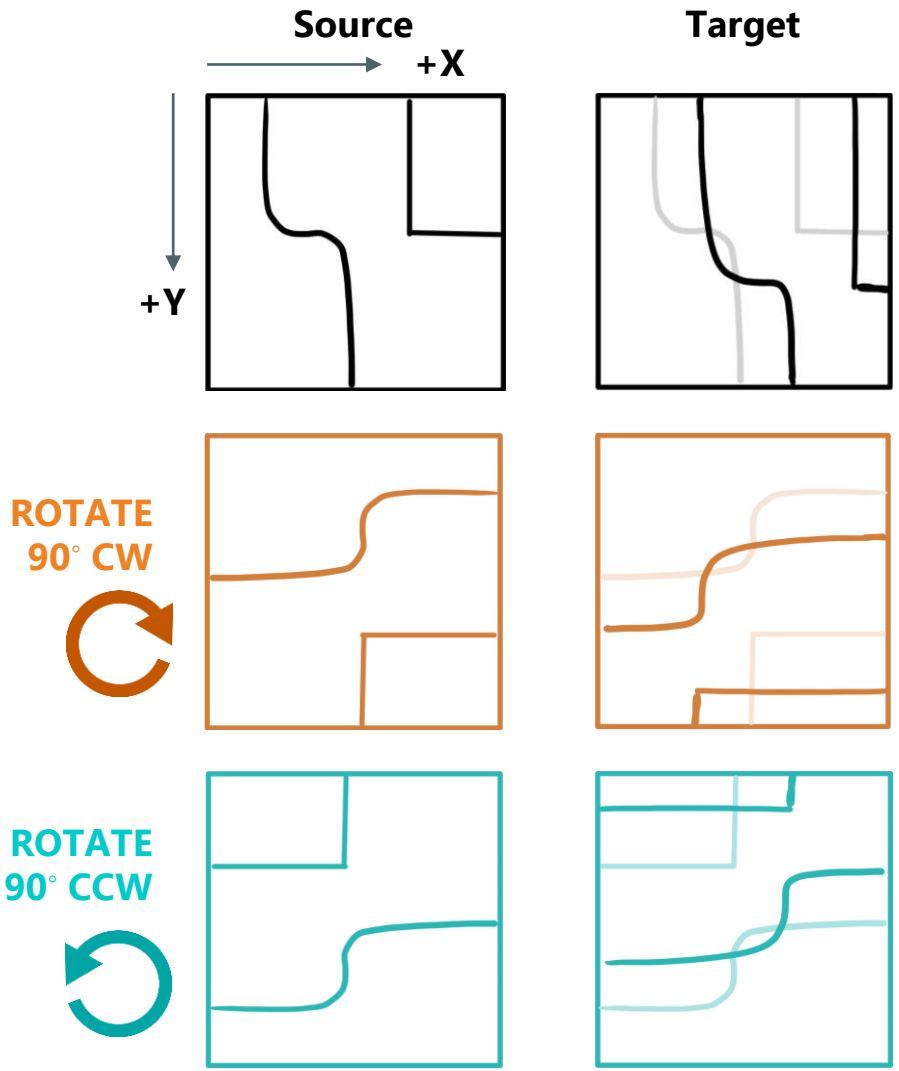


$[+x, +y, 0]$

$[-y, +x, 0]$ → **Exchange X/Y, Invert X**

$[+y, -x, 0]$ → **Exchange X/Y, Invert Y**

© 2021 Asensus Surgical, Inc.

# Geometry augmentation: CROPPING

**Switched to square images** → Since implementing augmentations

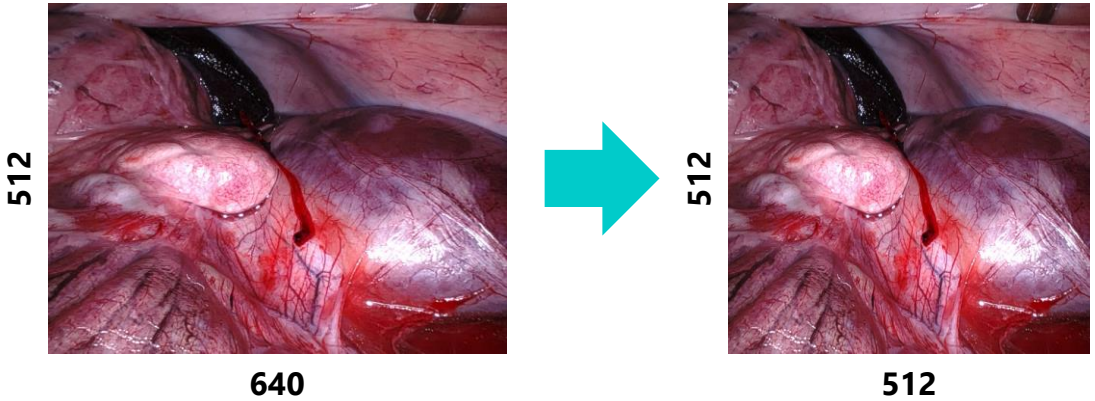


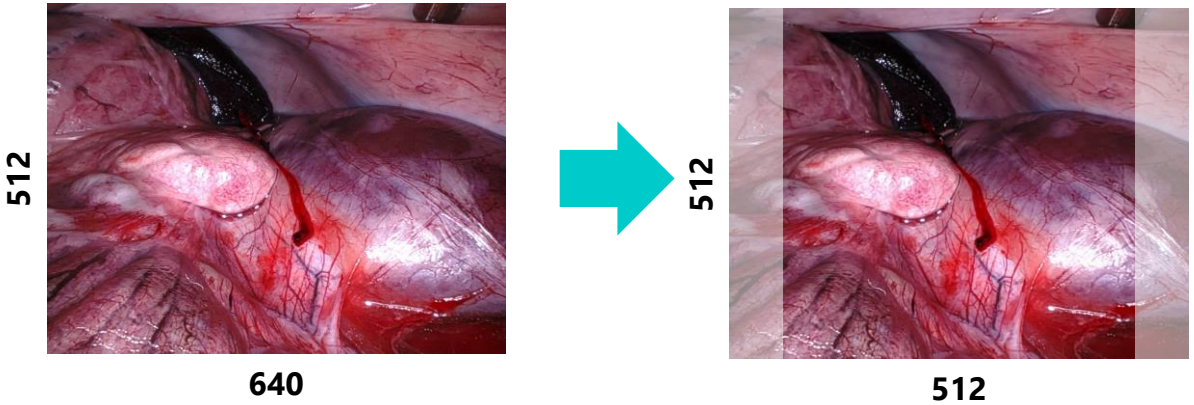


Current Approach:
**Squishing**
→ Invariant to camera motion

Planned Approach:
**Cropping**
- Influence on ground truth?
- Centered Crop only?

© 2021 Asensus Surgical, Inc.

# Geometry augmentation: CROPPING

**Switched to square images** → Since implementing augmentations

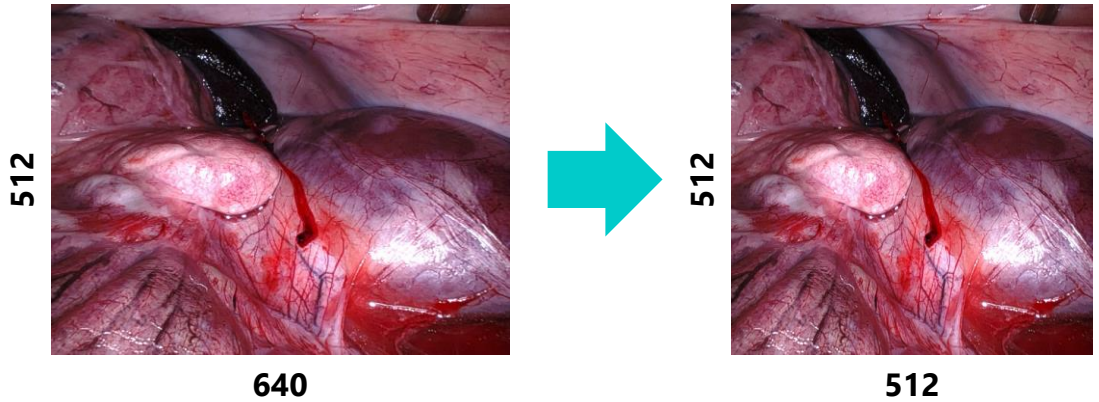


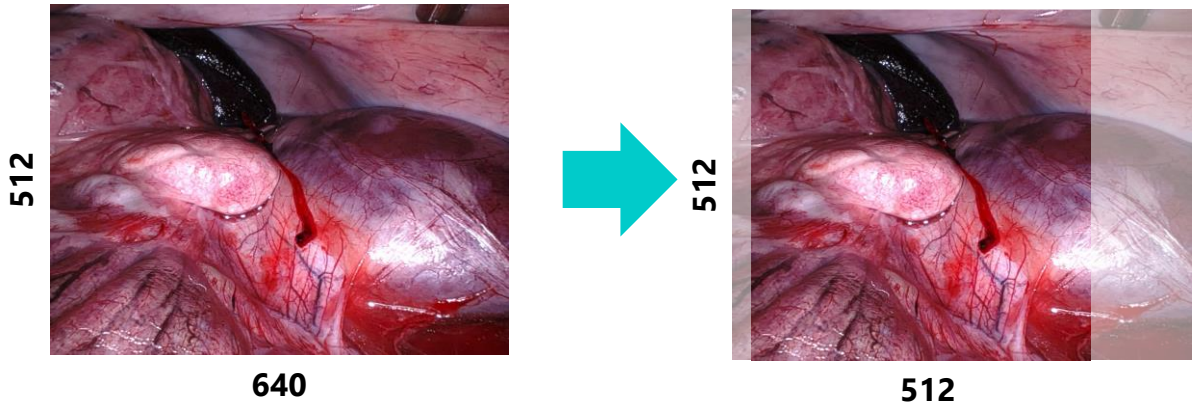


Current Approach:
**Squishing**
→ Invariant to camera motion

Planned Approach:
**Cropping**
- Influence on ground truth?
- Centered Crop only?

© 2021 Asensus Surgical, Inc.

# Geometry augmentation: CROPPING

**Switched to square images** → Since implementing augmentations

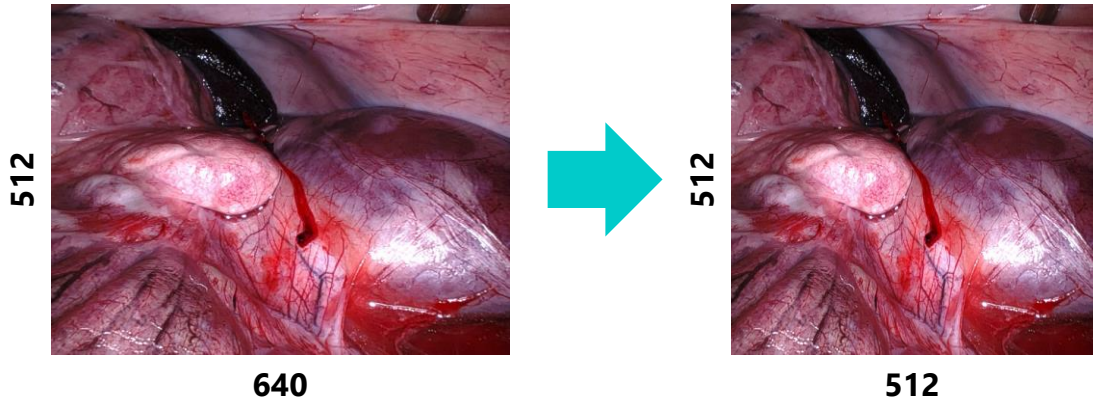


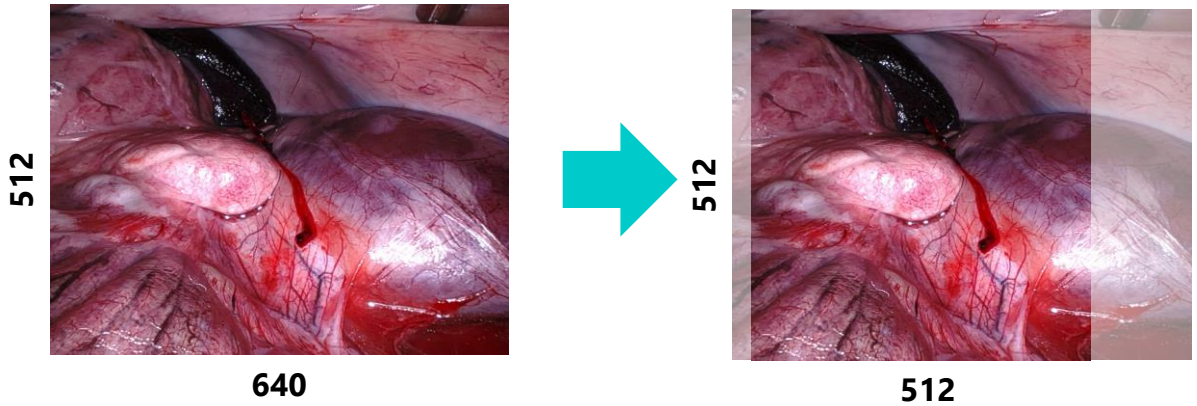


Current Approach:
**Squishing**
→ Invariant to camera motion

Planned Approach:
**Cropping**
- Influence on ground truth?
- Centered Crop only?

© 2021 Asensus Surgical, Inc.