The University of Nottingham

UNITED KINGDOM · CHINA · MALAYSIA

# Equipment Specification

Hydrogen Cyanide and AMS Plant Replacement


Group 06

Jiajie SUN (20125123)
Yu'ang GUO (20126326)
Yukun WANG (20126873)
Huanyu CHEN (20126514)
Jiaxu LYU (20126937)
Lisha WEI (20126940)
Zhiyu CHAI (20126306)

The University of Nottingham

UNITED KINGDOM · CHINA · MALAYSIA

**Content**


1. Nominated equipment data sheet ..... 4
   1.1 NH3 Absorber A-001 by Zhiyu Chai (20126306) ..... 4
   1.2 HCN Absorber A-002 by Jiaxu LYU (20126937) ..... 9
   1.3 Distillation column DC-001 by Yu'ang Guo (20126326) ..... 13
   1.4 Blender vessel BE-001 by Lisha Wei (20126940) ..... 19
   1.5 Wastewater reactor MT-003 by Yukun Wang (20126873) ..... 25
   1.6 Flash column FC-001 by Jiajie Sun (20125123) ..... 30
   1.7 Waste heat boiler WH-001 by Huanyu Chen (20126514) ..... 36
2. Reactor ..... 43
3. Line list ..... 47
4. Valve list ..... 50
5. Equipment list ..... 51
6. Rest equipment ..... 52
   6.1 BL-001 ..... 52
   6.2 BL-002 ..... 54
   6.3 C-001 ..... 56
   6.4 AC-001 ..... 58
   6.5 F-001 ..... 60
   6.6 HE-001 ..... 62
   6.7 HE-002 ..... 63
   6.8 HE-003A ..... 64
   6.9 HE-003B ..... 65
   6.10 HE-004 ..... 66
   6.11 HE-005A ..... 67
   6.12 HE-005B ..... 68
   6.13 HE-006A ..... 69
   6.14 HE-006B ..... 70
   6.15 HE-007A ..... 71
   6.16 HE-007B ..... 72
   6.17 HE-008 ..... 74
   6.18 HE-009 ..... 76
   6.19 EV-001 ..... 77
   6.20 CM-001 ..... 80
   6.21 CT-001 ..... 81
   6.22 D-001 ..... 84

6.23 MT-001 ..... 87
6.24 MT-002 ..... 89
6.25 FN-001 ..... 91
7.Appendix ..... 92

# 1. Nominated equipment data sheet

## 1.1 NH3 Absorber A-001 by Zhiyu Chai (20126306)

| | | | |
|---|---|---|---|
| CLIENT: | Lucite | The University of Nottingham<br>UNITED KINGDOM · CHINA · MALAYSIA | **CALCULATION SHEET** |
| LOCATION: | Cassel Works, Billingham TS23 1LE | | |
| SUBJECT: | NH3 absorption | | |
| PROJECT: | rogen Cyanide and AMS Plant Replacem | | DOCUMENT NO.: A-001 |
| JOB NO.: | 2022-001 | | EQUIPMENT ITEM NO.: A-001 |
| Rev. | 1 | | GROUP NO.: Group 6 |

**Objectives:**

To calculate some parameters and the dimentions of the absorber.

**Input Documents:**

| | Document Title | Doc. Number | Rev. | Date |
|---|---|---|---|---|
| 3 | Mechanical Data | 1 | 1 | 4/12/2022 |
| 3 | Process Data | 2 | 1 | 4/12/2022 |
| 3 | Calculation sheet | 3 | 1 | 4/12/2022 |
| 3 | Calculation sheet 2 | 4 | 1 | 4/12/2022 |
| | Calculation sheet 3 | 5 | 1 | 4/12/2022 |
| | | | | |
| | | | | |
| | | | | |

**Assumptions:**

95% NH3 is absorbed
The liquid velocity is constant
The pressure drop of H2O is 83 mm/m
The impact of heat loss is ignored

**Summary of Results:**

Dimension of Absorber (tan/tan Height 9320mm, Outer Diameter 3280mm, Inner Diameter 3190mm)

| REV. | DESCRIPTION | DATE | BY | CHECK | APPROVED | DOCUMENT NO. |
|---|---|---|---|---|---|---|
| 0 | Check K4 | 4/8/2022 | CZY | GYA | SJJ/GYA | A-001 |
| 1 | Check flooding point | 4/10/2022 | CZY | GYA | SJJ/GYA | |
| 2 | Check HOG | 4/12/2022 | CZY | GYA | SJJ/GYA | |

PAGE 1 OF 4

The University of Nottingham

UNITED KINGDOM · CHINA · MALAYSIA

| | |
|---|---|
| CLIENT: | Lucite |
| LOCATION: | Cassel Works, New Road, Billingham TS23 1LE |
| SERVICE | NH3 absorption |
| PROJECT: | Hydrogen Cyanide and AMS Plant Replacement |
| JOB NO.: | 2022-001 |
| GROUP NO.: | Group 6 |

The University of Nottingham

UNITED KINGDOM · CHINA · MALAYSIA

# PROCESS DATA SHEET
# VERTICAL VESSEL

| | | | |
|---|---|---|---|
| UNIT NO.: | A-001 | | |
| ITEM NO.: | A-001 | NO. REQD.: | 1 |

REV.

## PROCESS SKETCH

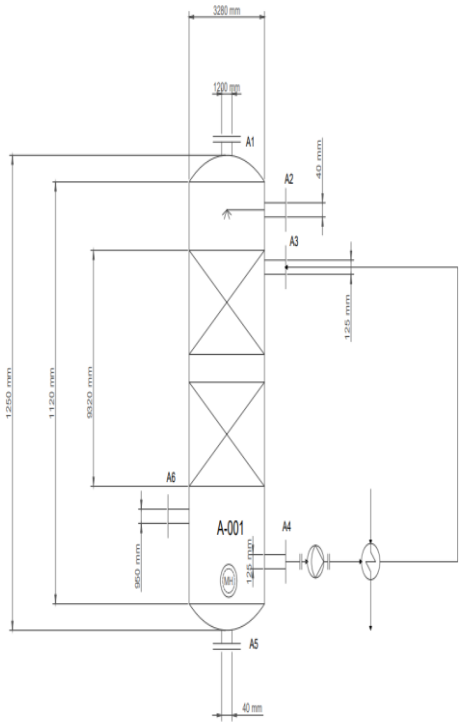


## MECHANICAL DESIGN DATA

| | | | | | |
|---|---|---|---|---|---|
| Design Pressure | | barg | : | 1.3 | |
| Vacuum design condition | Press bara : | 0.50 | @ Temp °C : | 105 | |
| Pressure drop through internals | | bar | : | 0.5 | |
| Maximum Design Temperature | | °C | : | 105 | |
| Minimum Design Temperature | | °C | : | 55 | |
| Minimum Ambient Temperature | | °C | : | 10 | |
| Steamout conditions | Press barg : | 3.50 | @ Temp °C : | 150 | |
| Corrosion Allowance | | mm | : | 3.0 | |
| Insulation Type | | | : | PP | |
| Insulation Thickness | | mm | : | 0.2 | |
| Vessel Thickness | | mm | : | 6 | |
| Stress relieved (process reasons) | | | : | Yes | |
| Inside Diameter | | mm | : | 3268 | |
| Tan/Tan Length | | mm | : | 9320 | |
| Head Type | | | : | Semi-elliptical | |
| Total Volume | | m3 | : | 96.60288056 | |

## MATERIALS OF CONSTRUCTION

| | | |
|---|---|---|
| Shell Plate | : | 316 SS |
| Head Plate | : | 316 SS |
| Internals | : | 316 SS |

## CONNECTION DETAILS

| No. | SIZE DN | FLANGE FINISH | FLANGE RATING | SERVICE |
|---|---|---|---|---|
| A1 | 1200 | RTJ | 150# | B |
| A2 | 650 | RF | 150# | B |
| A3 | 125 | RF | 150# | B |
| A4 | 125 | RF | 150# | B |
| A5 | 900 | RF | 150# | B |
| A6 | 950 | RTJ | 150# | B |

## INTERNALS DETAILS

The precentage flooding point is 76%. When introduce H2SO4 solution to A-001 prevent the absorber reach the flooding point

## NOTES:

Assume 5% NH3 exists in the outlet gas

Assume there is no steam in the outlet gas

The maximun and minimum flow rate inlet gas is 62194 kg/h and 7118kg/h.

| REV. | DESCRIPTION | DATE | BY | CHECK | APPROVED | DOCUMENT NO. |
|---|---|---|---|---|---|---|
| 0 | Check K4 | 4/8/2022 | CZY | GYA | SJJ/GYA | |
| 1 | Check flooding point | 4/10/2022 | CZY | GYA | SJJ/GYA | A-001 |
| 2 | Check HOG | 4/12/2022 | CZY | GYA | SJJ/GYA | |

SHEET 1 OF 6

The University of Nottingham

UNITED KINGDOM · CHINA · MALAYSIA

| | | | |
|---|---|---|---|
| CLIENT: | Lucite | **CALCULATION SHEET** | |
| LOCATION: | Cassel Works, Billingham TS23 1LE | | |
| SUBJECT: | NH3 absorption | | |
| PROJECT: | Hydrogen Cyanide and AMS Plant Replacer | DOCUMENT NO.: | A-001 |
| JOB NO.: | 2022-001 | EQUIPMENT ITEM NO.: | A-001 |
| Rev. | 1 | GROUP NO.: | 6 |

## REACTIONS

| | | | | Unit |
|---|---|---|---|---|
| 1 | Partial pressure of NH3 | Partial pressure of NH3 in the feed | | |

$$p_i = \frac{709}{62194} \times 760\ mmHg = 8.66\ mmHg$$

Partial pressure of NH3 in the exit gas

$$p_e = \frac{35.45}{62194} \times 760\ mmHg = 0.433\ mmHg$$

2 y1,y2

$$\frac{y_1}{y_2} = \frac{p_1}{p_2} = \frac{8.66}{0.433} = 20$$

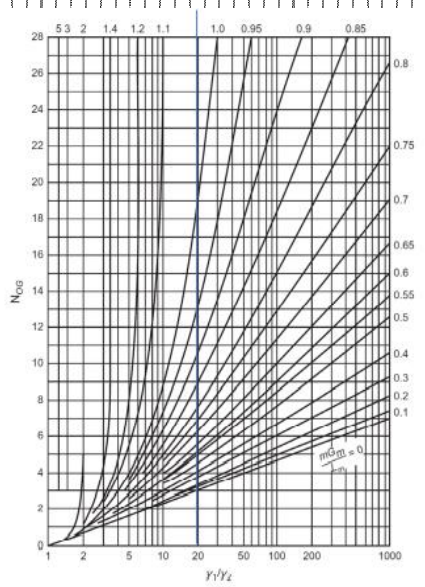


$m\frac{G_m}{L_m} = 0.8$ is used in this case

Therefore, $N_{OG}$=8

| | | | | |
|---|---|---|---|---|
| 3 | Flow rate | Gas flow rate | 62194 | kg/h |
| | | Liquid flow rate | 10729 | kg/h |

| REV. | DESCRIPTION | DATE | BY | CHECK | APPROVED | DOCUMENT NO. |
|---|---|---|---|---|---|---|
| | | | | | | A-001 |

SEE PAGE 1

PAGE 3 OF 6

The University of Nottingham

UNITED KINGDOM · CHINA · MALAYSIA

| | | | |
|---|---|---|---|
| CLIENT: | Lucite | **CALCULATION SHEET** | |
| LOCATION: | Cassel Works, Billingham TS23 1LE | | |
| SUBJECT: | NH3 absorption | DOCUMENT NO.: | A-001 |
| PROJECT: | Hydrogen Cyanide and AMS Plant Replacer | EQUIPMENT ITEM NO.: | A-001 |
| JOB NO.: | 2022-001 | GROUP NO.: | Group 6 |
| Rev. | 1 | | |

## REACTIONS

| | | | Unit |
|---|---|---|---|
| 4 | $K_4$ | 2.03 | |

$$K_4 = \frac{13.1(V_w^*)^2 F_p \left(\frac{\mu_L}{\rho_L}\right)^{0.1}}{\rho_v(\rho_L - \rho_v)}$$

where $V_w^*$ = gas mass flow-rate per unit column cross-sectional area, kg/m$^2$s
$F_p$ = packing factor, characteristic of the size and type of packing, see Table 11.3, m$^{-1}$.
$\mu_L$ = liquid viscosity, Ns/m$^2$
$\rho_L, \rho_v$ = liquid and vapour densities, kg/m$^3$

83 mm H20/m packing is chosen

5 $F_{LV}$

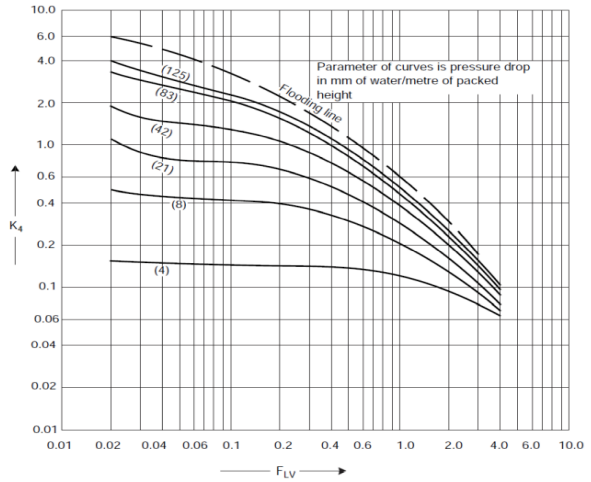


From the graph, when k4=2.03 and 83 mm H20 drop is chosen, FLV= 0.1

6 $V_w{}^*$

$$V_w{}^* = \left[\frac{K_4 \rho v(\rho_l - \rho_v}{13.1 * F_p\left(\mu_l/\rho_l\right)^{0.1}}\right]^{0.5} = 2.054$$

2.054 kg/m2s

7 D

$$Area = \frac{17.27}{V_W} = 8.44\ m^2$$

8.44 m2

$$Area = 0.25 * \pi * D^2$$

Therefore, the diameter can be calculated 3.2 m

8 Percentage flooding

$$percentage\ flooding = 0.76 \times \frac{8.44}{8.54} = 75\%$$

75%

| REV. | DESCRIPTION | DATE | BY | CHECK | APPROVED | DOCUMENT NO. |
|---|---|---|---|---|---|---|
| | | | | | | A-001 |
| | | | | | | PAGE 4 OF 6 |

SEE PAGE 1

The University of Nottingham

UNITED KINGDOM · CHINA · MALAYSIA

| | | | |
|---|---|---|---|
| CLIENT: | Lucite | | **CALCULATION SHEET** |
| LOCATION: | Cassel Works, Billingham TS23 1LE | The University of Nottingham UNITED KINGDOM · CHINA · MALAYSIA | |
| SUBJECT: | NH3 absorption | | DOCUMENT NO.: A-001 |
| PROJECT: | Hydrogen Cyanide and AMS Plant Replacer | | EQUIPMENT ITEM NO.: A-001 |
| JOB NO.: | 2022-001 | | GROUP NO.: Group 6 |
| Rev. | 1 | | |

## REACTIONS

| | | | | Unit |
|---|---|---|---|---|
| 9 | K3,Ψh andϕh | From this graph, K3 is | 0.650 | |
| | | From this graph Ψh is | 64.0 | |
| | | From this graph, ϕh is | 0.03 | |

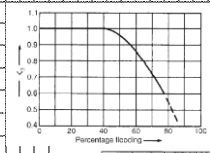


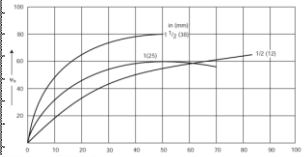

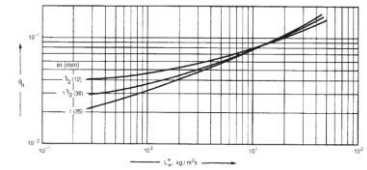

| | | | | |
|---|---|---|---|---|
| 10 | HL and HG | HL | 0.23 | m |
| | | HG | 0.98 | m |

$$\mathbf{H}_L = 0.305\phi_h(Sc)_L^{0.5}K_3\left(\frac{Z}{3.05}\right)^{0.15}$$

$$\mathbf{H}_G = 0.011\psi_h(Sc)_v^{0.5}\left(\frac{D_c}{0.305}\right)^{1.11}\left(\frac{Z}{3.05}\right)^{0.33} \Big/ (L_w^* f_1 f_2 f_3)^{0.5}$$

| | | | | |
|---|---|---|---|---|
| | $(SC)_v$ | $SC_v = \frac{\mu_v}{1.15 * 1.45 * 10^{-5}}$ | 2.23 | |
| | $(SC)_L$ | $SC_L = \frac{10^{-3}}{1000 * D_L}$ | 588 | |
| | | Assume Z is m and check whether it is close to the real value | | |
| | $H_L$ | | 0.23 | m |
| | $H_G$ | | 0.98 | m |
| | $H_{OG}$ | $\mathbf{H}_{OG} = \mathbf{H}_G + m\frac{G_m}{L_m}\mathbf{H}_L$ | 1.16 | m |
| 11 | $Z$ | $Z = 8 \times 1.16$ | 9.32 | m |
| 12 | Total height | Assume the height bottom and top part of the absorber is 0.5 m | 12.5 | m |

| REV. | DESCRIPTION | DATE | BY | CHECK | APPROVED | DOCUMENT NO. |
|---|---|---|---|---|---|---|
| | | | | | | A-001 |

SEE PAGE 1

PAGE 5 OF 6

The University of Nottingham

UNITED KINGDOM · CHINA · MALAYSIA

## 1.2 HCN Absorber A-002 by Jiaxu LYU (20126937)

| | | | |
|---|---|---|---|
| CLIENT: | Lucite | | |
| LOCATION: | Cassel Works, New Road, Billingham TS23 1LE | | |
| SERVICE: | HCN distillation column | | |
| PROJECT: | Hydrogen Cyanide and AMS Plant Replacement | | |
| JOB NO.: | 2022-001 | | |
| GROUP NO.: | Group 6 | | |

The University of Nottingham
UNITED KINGDOM · CHINA · MALAYSIA

**CALCULATION SHEET**

DOCUMENT NO.: A-002
EQUIPMENT ITEM NO.: A-002
GROUP NO.: 6

### REACTIONS

Assume absorber A-002 is the tray column

Mass balance for A-002

| | Liquid feed in A-002 | | | | Gas feed in A-002 | | | |
|---|---|---|---|---|---|---|---|---|
| | Mass Flowrate kg/hr | Mass Fraction | Molar Flowrate kmol/hr | Molar Fraction | Mass Flowrate kg/hr | Mass Fraction | Molar Flowrate kmol/hr | Molar Fraction |
| NH3 | 0 | 0 | 0 | 0 | 0 | 0 | 0 | 0 |
| CH4 | 0 | 0 | 0 | 0 | 0.0470363 | 7.752E-07 | 0.0029398 | 1.347E-06 |
| C2 | 0 | 0 | 0 | 0 | 0 | 0 | 0 | 0 |
| C3 | 0 | 0 | 0 | 0 | 0 | 0 | 0 | 0 |
| C4 | 0 | 0 | 0 | 0 | 0 | 0 | 0 | 0 |
| CO2 | 0 | 0 | 0 | 0 | 93.147165 | 0.0015352 | 2.116981 | 0.00097 |
| N2 | 0 | 0 | 0 | 0 | 51726.515 | 0.8525405 | 1847.3755 | 0.8465096 |
| H2O | 11091.247 | 0.9960092 | 616.180403 | 0.9980598 | 0 | 0 | 0 | 0 |
| O2 | 0 | 0 | 0 | 0 | 70.904378 | 0.0011686 | 2.2157618 | 0.0010153 |
| HCN | 27.74 | 0.0024911 | 1.02740741 | 0.0016641 | 6658.5518 | 0.1097442 | 246.61303 | 0.1130037 |
| CO | 0 | 0 | 0 | 0 | 2074.0076 | 0.0341832 | 74.0717 | 0.0339413 |
| H2 | 0 | 0 | 0 | 0 | 17.732307 | 0.0002923 | 8.8661533 | 0.0040627 |
| H2SO4 | 16.7 | 0.0014997 | 0.17040816 | 0.000276 | 0 | 0 | 0 | 0 |
| (NH4)2SO4 | 0 | 0 | 0 | 0 | 0 | 0 | 0 | 0 |
| NO2 | 0 | 0 | 0 | 0 | 0 | 0 | 0 | 0 |
| NO | 0 | 0 | 0 | 0 | 32.474631 | 0.0005352 | 1.0824877 | 0.000496 |
| Total | 11135.687 | 1 | 617.378219 | 1 | 60673.38 | 1 | 2182.3446 | 1 |

| | Gas out of A-002 | | | | Liquid out of A-002 | | | |
|---|---|---|---|---|---|---|---|---|
| | Mass Flowrate kg/hr | Mass Fraction | Molar Flowrate kmol/hr | Molar Fraction | Mass Flowrate kg/hr | Mass Fraction | Molar Flowrate kmol/hr | Molar Fraction |
| NH3 | 0 | 0 | 0 | 0 | 0 | 0 | 0 | 0 |
| CH4 | 0.0470363 | 8.707E-07 | 0.0029398 | 1.518E-06 | 0 | 0 | 0 | 0 |
| C2 | 0 | 0 | 0 | 0 | 0 | 0 | 0 | 0 |
| C3 | 0 | 0 | 0 | 0 | 0 | 0 | 0 | 0 |
| C4 | 0 | 0 | 0 | 0 | 0 | 0 | 0 | 0 |
| CO2 | 93.147165 | 0.0017242 | 2.116981 | 0.0010935 | 0 | 0 | 0 | 0 |
| N2 | 51726.515 | 0.9574814 | 1847.3755 | 0.9541965 | 0 | 0 | 0 | 0 |
| H2O | 0 | 0 | 0 | 0 | 11091.247 | 0.6236101 | 616.1804 | 0.7134448 |
| O2 | 70.904378 | 0.0013125 | 2.2157618 | 0.0011445 | 0 | 0 | 0 | 0 |
| HCN | 8.6921793 | 0.0001609 | 0.3219326 | 0.0001663 | 6677.5996 | 0.3754509 | 247.3185 | 0.2863579 |
| CO | 2074.0076 | 0.0383908 | 74.0717 | 0.0382591 | 0 | 0 | 0 | 0 |
| H2 | 17.732307 | 0.0003282 | 8.8661533 | 0.0045795 | 0 | 0 | 0 | 0 |
| H2SO4 | 0 | 0 | 0 | 0 | 16.7 | 0.000939 | 0.1704082 | 0.0001973 |
| (NH4)2SO4 | 0 | 0 | 0 | 0 | 0 | 0 | 0 | 0 |
| NO2 | 0 | 0 | 0 | 0 | 0 | 0 | 0 | 0 |
| NO | 32.474631 | 0.0006011 | 1.0824877 | 0.0005591 | 0 | 0 | 0 | 0 |
| | | | | | 0 | 0 | 0 | 0 |
| | | | | | 0 | 0 | 0 | 0 |
| Total | 54023.52 | 1 | 1936.0535 | 1 | 17785.547 | 1 | 863.66931 | 1 |

| | | Unit |
|---|---|---|
| The molar fraction of HCN in liquid feed $X_{in}$ | 0.00166 | |
| The molar fraction of HCN in out liquid $X_{out}$ | 0.2859 | |
| The molar fraction of HCN in gas feed $Y_{in}$ | 0.1130 | |
| The molar fraction of HCN in out gas $Y_{out}$ | 0.00017 | |
| Henry's coefficient of HCN for water (32 °C) $k_H$ | 9.3 | kPa*kg/mol |
| The ratio Y/X at equilibrium $m_n$ | 6.7 | |
| L/G | 0.283 | |
| Absorption factor A | 0.04222338 | |

$$A_n = \frac{L_n}{m_n G_n}$$

The fractional absorption of the component F: 0.999

$$\frac{Y'_{N_p+1} - Y'_1}{Y'_{N_p+1}}$$

The number of tray in A-002 $N_p$: #NUM! (N/A)

$$N_p = \frac{\log\left(\frac{F-A}{F-1}\right)}{\log A} - 1$$

Because the value of L/G is too small, A-002 is not a tray column absorber.

Therefore, A-002 is a packed column absorber.

| REV. | DESCRIPTION | DATE | BY | CHECK | APPROVED | DOCUMENT NO. |
|---|---|---|---|---|---|---|
| | | | | | | A-002 |

SEE PAGE 1

PAGE 2 OF 5

The University of Nottingham

UNITED KINGDOM · CHINA · MALAYSIA

| | | | |
|---|---|---|---|
| CLIENT: | Lucite | **CALCULATION SHEET** | |
| LOCATION: | Cassel Works, New Road, Billingham TS23 1LE | | |
| SERVICE: | HCN distillation column | | |
| PROJECT: | Hydrogen Cyanide and AMS Plant Replacement | DOCUMENT NO.: | A-002 |
| JOB NO.: | 2022-001 | EQUIPMENT ITEM NO.: | A-002 |
| GROUP NO.: | Group 6 | GROUP NO.: | 6 |

## REACTIONS

| | | Unit |
|---|---|---|
| Partial pressure of HCN in the feed $P_{in}$, $P_1$ | 9.04 | kPa |
| Partial pressure of HCN in the exit gas $P_{out}$, $P_2$ | 0.17 | kPa |
| $y_1/y_2$ | 53.18 | |
| $L_m*x_1=G_m*(y_1-y_2)$ $G_m/L_m=x_1/(y_1-y_2)$ | 0.11676 | |
| $mG_m/L_m$ | 0.782 | |
| $N_{OG}$ | 12 | |
| Gas fllow rate $V_W$ | 16.854 | kg/s |
| Liquid flow rate $L_W$ | 3.093 | kg/s |
| Gas density $\rho_V$ | 1.32 | kg/m$^3$ |
| Liquid density $\rho_L$ | 953.9 | kg/m$^3$ |
| $F_{LV}$ | 0.0683 | |

$$\frac{y_1}{y_2} = \frac{p_1}{p_2}$$

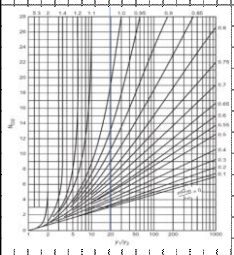

$$F_{LV} = \frac{L_W^*}{V_W^*}\sqrt{\frac{\rho_V}{\rho_L}}$$

| | | | |
|---|---|---|---|
| Design for a pressure drop of 20 mm H2O/m packing | | | |
| $K_4$ | 0.8 | | |
| At flooding $K_4$ | 4 | | |
| Percentage flooding | 0.45 | | |
| | Satisfactory | 45 | % |
| Packing factor $F_p$ | | 130 | m$^{-1}$ |
| $V'_W$ | | 3.835 | kg/m$^2$s |
| Column area required A | | 4.39 | m$^2$ |
| Diameter | | 2.37 | m |
| Actual diameter $D_C$ | | 2.4 | m |
| Column Area $A_a$ | | 4.52 | m$^2$ |
| Packing size to column diameter ratio | | 63 | % |

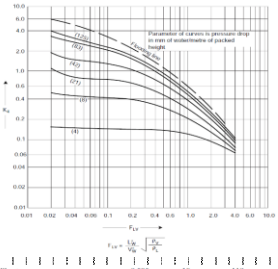

| Plastics (density for polypropylene) | 0.625 | 16 | 112 | 341 | 320 |
|---|---|---|---|---|---|
| | 1.0 | 25 | 88 | 207 | 170 |
| | 1.5 | 38 | 76 | 128 | 130 |

$$K_4 = \frac{13.1(V'_w)^2 F_p \left(\frac{\mu_L}{\rho_L}\right)^{0.1}}{\rho_v(\rho_L - \rho_v)}$$

$$V'_W = \left[\frac{K_4 \rho_V(\rho_L - \rho_v)}{13.1 F_p (\mu_L/\rho_L)^{0.1}}\right]^{1/2}$$

| REV. | DESCRIPTION | DATE | BY | CHECK | APPROVED | DOCUMENT NO. |
|---|---|---|---|---|---|---|
| | | | | | | A-002 |
| | | | | | | PAGE 3 OF 5 |

SEE PAGE 1

The University of Nottingham

UNITED KINGDOM · CHINA · MALAYSIA

| | | | |
|---|---|---|---|
| CLIENT: | Lucite | **CALCULATION SHEET** | |
| LOCATION: | Cassel Works, New Road, Billingham TS23 1LE | | |
| SERVICE: | HCN distillation column | | |
| PROJECT: | Hydrogen Cyanide and AMS Plant Replacement | DOCUMENT NO.: | A-002 |
| JOB NO.: | 2022-001 | EQUIPMENT ITEM NO.: | A-002 |
| GROUP NO.: | Group 6 | GROUP NO.: | 6 |

## REACTIONS

| | | Unit |
|---|---|---|
| Percentage flooding at selected diameter | 38.2 | % |
| $D_L$ | $1.7*10^{-9}$ | $m^2/s$ |
| $D_V$ | $1.45*10^{-5}$ | $m^2/s$ |
| $\mu_V$ | $2.03*10^{-5}$ | $Ns/m^2$ |
| $(Sc)_V$ | 1.061 | |
| $(Sc)_L$ | 193.61 | |
| $L^*_W$ | 0.747 | $kg/s\ m^2$ |
| $K_3$ For 41% flooding | 1 | |
| Percentage flooding correction factor | | |

$(Sc)_V = \mu_V/\rho_V/D_V$

$(Sc)_L = \mu_L/\rho_L/D_L$

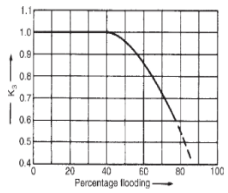


| | | |
|---|---|---|
| $\psi_h$ For 41% flooding | 77 | |
| Factor for $H_G$ for Berl saddles | | |

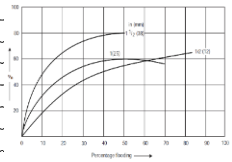

| | | |
|---|---|---|
| $\phi_h$ At $L^*_W = 0.747$ | 0.050 | |
| Factor for $H_L$ for Berl saddles | | |

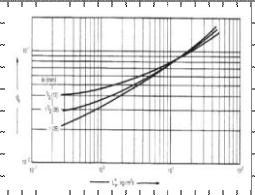

| | | |
|---|---|---|
| $H_{OG}$ | 1 | m |
| Z | 12 | m |

$H_{OG}$ can be expected to be around 1 m, so as a first estimate Z can be taken as 12 m, the column diameter is greater than 0.6 m.

Therefore, the diameter correction term will be taken as 2.3.

$$\mathbf{H}_G = 0.011\psi_h(Sc)_v^{0.5}\left(\frac{D_c}{0.305}\right)^{1.11}\left(\frac{Z}{3.05}\right)^{0.33} \Big/ (L^*_w f_1 f_2 f_3)^{0.5}$$

Only considered when Z > 3 m

= 2.3 if $D_c$ > 0.6 m

$$\mathbf{H}_L = 0.305\phi_h(Sc)_L^{0.5}K_3\left(\frac{Z}{3.05}\right)^{0.15}$$

The liquid temperature is 32 °C

The liquid is water

Therefore, $f_1 = f_2 = f_3 = 1$

| | | |
|---|---|---|
| $H_G$ | 0.70 | m |
| $H_L$ | 0.25 | m |
| $H_{OG}$ | 0.89 | m |

$$\mathbf{H}_{OG} = \mathbf{H}_G + m\frac{G_m}{L_m}\mathbf{H}_L$$

| | | |
|---|---|---|
| The packing height of A-002 Z | 10.64 | m |
| Space at the top | 2.4 | m |
| Space at the bottom | 2.4 | m |
| Height of manhole | 1 | m |

| REV. | DESCRIPTION | DATE | BY | CHECK | APPROVED | DOCUMENT NO. |
|---|---|---|---|---|---|---|
| | | | | | | A-002 |

SEE PAGE 1

PAGE 4 OF 5

The University of Nottingham

UNITED KINGDOM · CHINA · MALAYSIA

| | | | |
|---|---|---|---|
| CLIENT: | Lucite | | |
| LOCATION: | Cassel Works, New Road, Billingham TS23 1LE | | |
| SERVICE: | HCN distillation column | | |
| PROJECT: | Hydrogen Cyanide and AMS Plant Replacement | | |
| JOB NO.: | 2022-001 | | |
| GROUP NO.: | Group 6 | | |

The University of Nottingham

UNITED KINGDOM · CHINA · MALAYSIA

**CALCULATION SHEET**

| | |
|---|---|
| DOCUMENT NO.: | A-002 |
| EQUIPMENT ITEM NO.: | A-002 |
| GROUP NO.: | 6 |

## REACTIONS

| | | Unit |
|---|---|---|
| Tan length | 14.1 | m |
| The total height of A-002 $Z_O$ | 16.5 | m |
| The yield stress of 304SS σ | 170.00 | mpa |
| The minimum thickness of A-002 T | 1.41 | mm |
| | 0.00141 | m |
| Corrosion Allowance | 1.50 | mm |
| Tolerance | 0.29 | mm |
| The actual thickness of A-002 $T_a$ | 3.2 | mm |
| | 0.0032 | m |
| The volume of the 304ss | 0.428 | $m^3$ |
| The volume of A-002 | 70.99 | $m^3$ |
| Packing volume | 63.79 | $m^3$ |

$$t = \frac{PD}{2\sigma}$$

| REV. | DESCRIPTION | DATE | BY | CHECK | APPROVED | DOCUMENT NO. |
|---|---|---|---|---|---|---|
| | | | | | | A-002 |

SEE PAGE 1

PAGE 5 OF 5

## 1.3 Distillation column DC-001 by Yu'ang Guo (20126326)

| | | | |
|---|---|---|---|
| CLIENT: | Coates Chemicals | The University of Nottingham<br>UNITED KINGDOM · CHINA · MALAYSIA | **CALCULATION SHEET** |
| LOCATION: | Cassel Works, Billingham TS23 1LE | | |
| SUBJECT: | HCN distillation column | | |
| PROJECT: | drogen Cyanide and AMS Plant Replacem | | DOCUMENT NO.: DC-001 |
| JOB NO.: | N/A | | EQUIPMENT ITEM NO.: DC-001 |
| Rev. | 1 | | GROUP NO.: 6 |

**Objectives:**

To calculate some parameters and the dimentions of the distillation column.

**Input Documents:**

| Document Title | Doc. Number | Rev. | Date |
|---|---|---|---|
| Calculation sheet (1) | 1 | | |
| Calculation sheet (2) | 2 | | |
| Calculation sheet (3) | 3 | | |
| | | | |
| | | | |
| | | | |
| | | | |
| | | | |

**Assumptions:**

Reflux ratio is 1.5 times of Rmin

**Summary of Results:**

The number of tray is 25. The diameter of DC-001 is 1.4 m, the height is 15.1 m, the thickness is 5.6 mm.

| REV. | DESCRIPTION | DATE | BY | CHECK | APPROVED | DOCUMENT NO. |
|---|---|---|---|---|---|---|
| 1 | Final draft | 4/20/2022 | GYA | SJJ | CZY | DC-001 |
| | | | | | | |
| | | | | | | |
| | | | | | | PAGE 1 OF 4 |

The University of Nottingham

UNITED KINGDOM · CHINA · MALAYSIA

| | |
|---|---|
| CLIENT: | Coates Chemicals |
| LOCATION: | Cassel Works, New Road, Billingham TS23 1LE |
| SERVICE: | HCN distillation column |
| PROJECT: | Hydrogen Cyanide and AMS Plant Replacement |
| JOB NO.: | N/A |

The University of Nottingham
UNITED KINGDOM · CHINA · MALAYSIA

## PROCESS DATA SHEET
## VERTICAL VESSEL

UNIT NO.: DC-001

ITEM NO.: DC-001 NO. REQD.: 1

REV.

**PROCESS SKETCH**

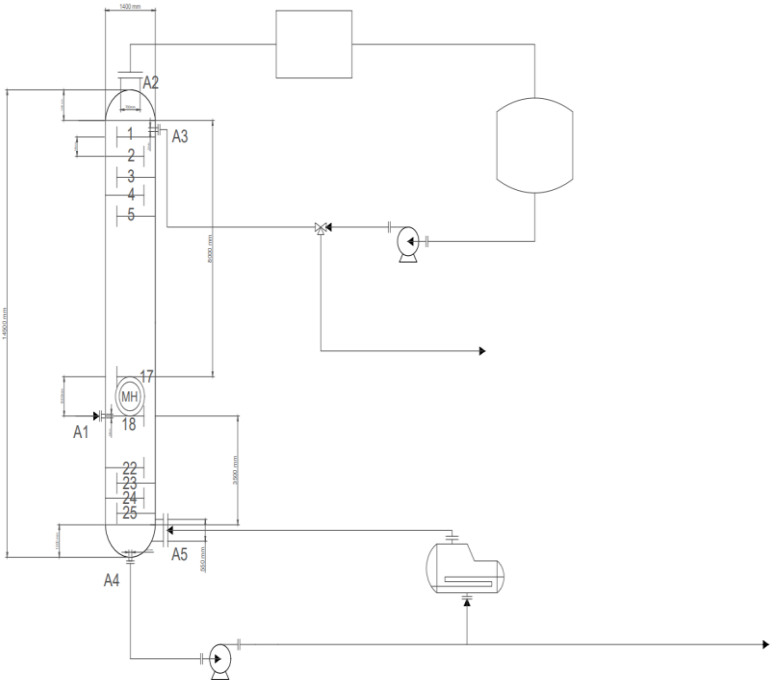


**MECHANICAL DESIGN DATA**

| | | | | |
|---|---|---|---|---|
| Design Pressure | barg | : | 2.9 | |
| Vacuum design condition | Press bara : | None | @ Temp °C : | N/A |
| Pressure drop through internals | bar | : | 2.5 | |
| Pressure drop of each tray | bar | | 0.1 | |
| Maximum Design Temperature | °C | : | 203.85 | |
| Minimum Design Temperature | °C | : | 90.6 | |
| Minimum Ambient Temperature | °C | : | 5 | |
| Steamout conditions | Press barg : | 3.50 | @ Temp °C : | 150 |
| Corrosion Allowance | mm | : | 3.0 | |
| Insulation Type | | : | H | |
| Insulation Thickness | mm | : | 0.8 | |
| Vessel Thickness | mm | | 5.6 | |
| Stress relieved (process reasons) | | : | Yes | |
| Inside Diameter | mm | : | 1400 | |
| Tan/Tan Length | mm | : | 12500 | |
| Head Type | | : | Semi-elliptical | |
| Total Volume of 304ss | m3 | : | 0.349 | |
| Total Volume of DC-001 | m3 | | 20.67 | |

**MATERIALS OF CONSTRUCTION**

| | | |
|---|---|---|
| Shell Plate | : | 304 SS |
| Head Plate | : | 304 SS |
| Internals | : | 304 SS |

**CONNECTION DETAILS**

| No. | SIZE DN | FLANGE FINISH | FLANGE RATING | SERVICE |
|---|---|---|---|---|
| A1 | 50 | RF | 150# | B |
| A2 | 700 | RTJ | 150# | P |
| A3 | 50 | RF | 150# | B |
| A4 | 65 | RF | 150# | B |
| A5 | 550 | RTJ | 150# | P |

**INTERNALS DETAILS**

The tray in the distillation column is fixed valve tray which has relatively high efficiency and doesn't cost too much.

**NOTES:**

Reflux ratio is 1.5 times of Rmin.

The range of feed into the distillation column is from 17770 kg/h to 2034 kg/h.

This equipment sheet cotains only the distillation column itself, condenser reboiler and pump details in the equipment list.

| REV. | DESCRIPTION | DATE | | BY | CHECK | APPROVED | DOCUMENT NO. |
|---|---|---|---|---|---|---|---|
| 1 | Final draft | | 4/20/2022 | GYA | SJI | CZY | DC-001 |
| 2 | | | | | | | |
| 3 | | | | | | | |

SHEET 1 OF 2

The University of Nottingham

UNITED KINGDOM · CHINA · MALAYSIA

| | | | |
|---|---|---|---|
| CLIENT: | Coates Chemicals | The University of Nottingham<br>UNITED KINGDOM - CHINA - MALAYSIA | **PROCESS DATA SHEET**<br>**VERTICAL VESSEL** |
| LOCATION: | Cassel Works, New Road, Billingham TS23 1LI | | |
| SERVICE: | HCN distillation column | | |
| PROJECT: | Hydrogen Cyanide and AMS Plant Replacemer | | UNIT NO.: DC-001 |
| JOB NO.: | N/A | | ITEM NO.: DC-001 NO. REQD.: 1 |
| GROUP NO.: | Group 6 | | |

REV. **PROCESS DATA**

**FLUID DATA**

| | | |
|---|---|---|
| Description | : | The purpose of this distillation column is to separate the mixture of water and hydrogen cyanide and purify hydrogen cyanide. |
| Flammable / Explosive | : | Yes / Yes |
| Toxic | : | Yes |
| Corrosive/erosive due to | : | Hydrogen cyanide in water is acidic and corosive to distioeation columns. |

**OPERATING CONDITIONS**

| | | |
|---|---|---|
| Operating Pressure of rectifying section, barg | : | 0.9 |
| Operating Temperature of rectifying section, °C | : | 40.345 |
| Operating Pressure of stripping section, barg | : | 2.15 |
| Operating Temperature of stripping section, °C | : | 95.45 |

**Separator Outlet Streams**

| **Design case** | Units | Case 1 Maximum | Case2 Minimum | Case 3 | Case 4 | Case 5 | Case 6 | Case 7 |
|---|---|---|---|---|---|---|---|---|
| **Vapour Data** | | | | | | | | |
| Mass Flowrate | kg/h | 27.00 | 3.1 | | | | | |
| Density | kg/m3 | 1.12 | 1.13 | | | | | |
| Viscosity | cP | 0.0053 | 0.0054 | | | | | |
| Molecular weight | kg/kgmol | 27.02 | 27.02 | | | | | |
| **Light Liquid Data** | | | | | | | | |
| Mass Flowrate | kg/h | 6673.00 | 763.8 | | | | | |
| Density | kg/m3 | 681.60 | 682.1 | | | | | |
| Viscosity | cP | 0.2067 | 0.2071 | | | | | |
| Surface tension | dyne/cm | 34.52 | 34.6 | | | | | |
| Molecular weight | kg/kgmol | 27.03 | 27.03 | | | | | |
| **Heavy Liquid Data** | | | | | | | | |
| Mass Flowrate | kg/h | 11070 | 1267.1 | | | | | |
| Density | kg/m3 | 914.3 | 918.9 | | | | | |
| Viscosity | cP | 0.1585 | 0.1724 | | | | | |
| Surface tension | dyne/cm | 51.45 | 52.47 | | | | | |
| Molecular weight | kg/kgmol | 18.04 | 18.04 | | | | | |

Notes When the feed flow into the distillation column changes, there will be some changes in the top and bottom temperatures of the distillation column, resulting in changes in the prpperties of the vapour and liquid. Maximum and minimum production are listed in the equipment sheet. Therefore, the mass flowrate of feed is from 17770 kg/h to 20334 kg/h; the vapour mass flowrate is from 27 kg/h to 3.1 kg/h; the vapour density is from 1.12 kg/m3 to 1.13 kg/m3; the vapour viscosity is from 0.0053 cP to 0.0054 Cp; the light liquid mass flowrate is from 6673 kg/h to 763.8 kg/h; the light liquid density is from 681.6 kg/m3 to 682.1 kg/m3; the light liquid viscosity is from 0.2067 cP to 0.2071 cP; the light liquid surface tension is from 34.52 to 34.6 dyn/cm; the heavy liquid mass flowrate is from 11070 kg/h to 1267.1 kg/h; the heavy liquid density is from 914.3 kg/m3 to 918.9 kg/m3; the heavy liquid viscosity is from 0.1585 cP to 0.1724 cP; the heavy liquid surface tension is from 51.45 dyn/cm to 52.47 dyn/cm throughout the operation of the distillation column.

| REV. | DESCRIPTION | DATE | BY | CHECK | APPROVED | DOCUMENT NO. |
|---|---|---|---|---|---|---|
| 1 | Final draft | 4/20/2022 | GYA | SJJ | CZY | |

SHEET 2 OF 2

**Distillation Column Tray Loading Data**

| | | Top Tray 1st | Feed Tray 18th | Bottom Tray 25th |
|---|---|---|---|---|
| **Design Data** | Units/Tray No. | 1 | 18 | 25 |
| **Vapour Entering Tray** | | | | |
| Pressure | barg | 0.119 | 1.913 | 2.546 |
| Temperature | °C | 28.18 | 70.56 | 135.8 |
| Mass Flowrate | kg/h | 20710 | 21590 | 11250 |
| Density | kg/m3 | 1.107 | 2.826 | 2.02 |
| Viscosity | cP | 0.005321 | 0.006398 | 0.01 |
| Molecular weight | kg/kgmol | 27.03 | 26.3 | 18.87 |
| **Liquid Leaving Tray** | | | | |
| Pressure | barg | 0 | 1.81 | 2.546 |
| Temperature | °C | 25.69 | 69.32 | 107.9 |
| Mass Flowrate | kg/h | 14010 | 32660 | 22320 |
| Density | kg/m3 | 681.6 | 732.5 | 907.9 |
| Viscosity | cP | 0.2068 | 0.2124 | 0.2212 |
| Surface tension | dyne/cm | 34.53 | 43.67 | 55.14 |
| Molecular weight | kg/kgmol | 27.03 | 22.76 | 18.45 |

Notes For Packed Bed replace Tray with Stage

The University of Nottingham

UNITED KINGDOM · CHINA · MALAYSIA

| | | | |
|---|---|---|---|
| CLIENT: | Coates Chemicals | The University of Nottingham<br>UNITED KINGDOM · CHINA · MALAYSIA | **CALCULATION SHEET** |
| LOCATION: | Cassel Works, Billingham TS23 1LE | | |
| SUBJECT: | HCN distillation column | | |
| PROJECT: | drogen Cyanide and AMS Plant Replacem | | DOCUMENT NO.: DC-001 |
| JOB NO.: | N/A | | EQUIPMENT ITEM NO.: DC-001 |
| Rev. | 1 | | GROUP NO.: 6 |

## REACTIONS

| | | | | | | | | | Unit |
|---|---|---|---|---|---|---|---|---|---|
| 1 | Stream condition | | | | kg/h | mass fraction | kmol/h | mole fraction | |
| | | Feed | H2O | 18 | 11091.2473 | 0.624196234 | 616.1804056 | 0.713585622 | |
| | | | HCN | 27 | 6677.59957 | 0.375803766 | 247.3185026 | 0.286414378 | |
| | | | | | 17768.84687 | 1 | 863.4989081 | 1 | |
| | | D | H2O Heavy key | 18 | 33.36683417 | 0.005 | 1.853713009 | 0.007481297 | |
| | | | HCN | 27 | 6640 | 0.995 | 245.9259259 | 0.992518703 | |
| | | | | | 6673.366834 | 1 | 247.7796389 | 1 | |
| | | W | H2O | 18 | 11067.74 | 0.997499883 | 614.8744444 | 0.998331865 | |
| | | | HCN Light key | 27 | 27.74 | 0.002500117 | 1.027407407 | 0.001668135 | |
| | | | | | 11095.48 | 1 | 615.9018519 | 1 | |
| q | | q Saturated liquid | | | | | | | 1 N/A |
| Rmin | | Xd/(Rmin+1)=0.415 | | | | | | | 1.392 |
| | | Rmin=1.392 | | | | | | | |

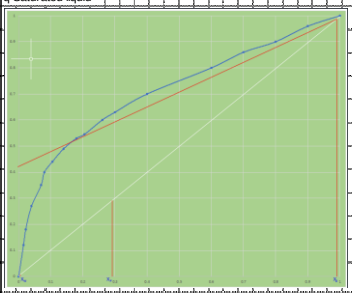

| | | | |
|---|---|---|---|
| | The y-intercept is 0.415 | | |
| R | R=1.5*Rmin | | 2.088 |
| D | Top product | | 247.78 kmol/h |
| L | Liquid molar flow rate in the rectifying section | | 517.36 kmol/h |
| V | Vapour molar flow rate in the rectifying section | | 765.14 kmol/h |
| L' | Liquid molar flow rate in the stripping section | | 1380.86 kmol/h |
| V' | Vapour molar flow rate in the stripping section V'=V | | 765.14 kmol/h |
| Top operating line-TOL | y=R/(R+1)x+1/(R+1)$x_d$ | y=0.676x+0.321 | |
| Bottom operating line-BOL | $y=\frac{RD+qF}{(R+1)D-(1-q)F}x-\frac{F-D}{(R+1)D-(1-q)F}x_W$ | y=1.8x+0.0134 | |
| Total number of theoretical trays | | | 13 |

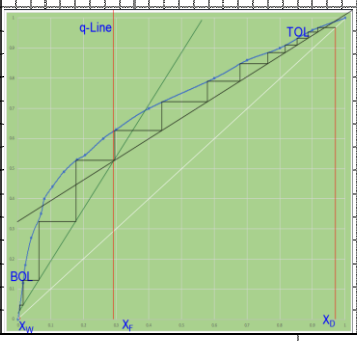


| REV. | DESCRIPTION | DATE | BY | CHECK | APPROVED | DOCUMENT NO. |
|---|---|---|---|---|---|---|
| | | | | | | DC-001 |

SEE PAGE 1

PAGE 2 OF 4

The University of Nottingham

UNITED KINGDOM · CHINA · MALAYSIA

| | | | |
|---|---|---|---|
| CLIENT: | Coates Chemicals | The University of Nottingham UNITED KINGDOM · CHINA · MALAYSIA | **CALCULATION SHEET** |
| LOCATION: | Cassel Works, Billingham TS23 1LE | | |
| SUBJECT: | HCN distillation column | | |
| PROJECT: | Irogen Cyanide and AMS Plant Replacem | | DOCUMENT NO.: DC-001 |
| JOB NO.: | N/A | | EQUIPMENT ITEM NO.: DC-001 |
| Rev. | 1 | | GROUP NO.: 6 |

## REACTIONS

| | | | Unit |
|---|---|---|---|
| Total number of theoretical trays | | 13 | |
| The number of tray of top stage | | 9 | |
| The number of tray of bottom stage | | 4 | |
| The tray on which the feed is located | | 10 | |
| $\alpha_{LK\ top}$ | $\alpha_{i,j} = \frac{y_i/x_i}{y_j/x_j} = \frac{p_i^*/P}{p_j^*/P} = \frac{p_i^*}{p_j^*}$ | 2.265 | |
| $\alpha_{LK\ bottom}$ | | 2.231 | |
| $\alpha_{LK\ av}$ | $\alpha_{LK,av} = \sqrt{\alpha_{LK,d}\alpha_{LK,b}}$ | 2.248 | |
| $\alpha_{HK\ av}$ | | 1 | |
| Minimum stages | $N_m = \frac{\log\left[\left(\frac{x_{LK}}{x_{HK}}\right)_d\left(\frac{x_{HK}}{x_{LK}}\right)_b\right]}{\log\left(\frac{\alpha_{LK,av}}{\alpha_{HK,av}}\right)}$ | 13.932 | |
| | | 14.000 | |
| Total number of theoretical trays | The number of trays calculated is basically consistent with that obtained by McCabe-thiele Method | 13.00 | |
| $E_{OC}$ The overall column efficiency | $E_O = 0.514(\alpha\mu)^{-0.23}$ | 0.541 | |
| The actual number of tray N | | 24.01 | |
| | | 25.0 | |
| The actual number of tray of top stage $N_T$ | | 16.62 | |
| | | 17.0 | |
| The actual number of tray of bottom stage $N_B$ | | 7.388 | |
| | | 8.0 | |
| The actual tray on which the feed is located $N_F$ | | 18.0 | |
| The pressure of top (condenser) | | 1.0 | bar |
| The pressure drop of each tray | | 0.1 | bar |
| The pressure of bottom (reboiler) | | 3.5 | bar |
| The pressure of feed inlet | | 2.9 | bar |
| To calculate the dimension of DC-001 | | | |
| Feed temperature $T_F$ | | 55 | °C |
| Top temperature $T_D$ | | 25.69 | °C |
| Bottom temperature $T_W$ | | 135.90 | °C |
| Mean temperature of rectification section | | 40.3 | °C |
| Mean temperature of stripping section | | 95.45 | °C |
| The average molar mass of the vapour phase $M_V$ | | 26.93 | kg/kmol |
| Vapour phase density $\rho_V$ | PV=NRT ρ=PM/RT | 2.02 | kg/m³ |
| Liquid phase density $\rho_L$ | | 707.05 | kg/m³ |
| Vapour phase volume flow rate $V_S$ | $V_S$=V$M_V$/3600ρ | 2.839 | m³/s |
| Liquid phase volume flow rate $L_S$ | $L_S$=V$M_L$/3600ρ ($M_L$=18) | 0.0037 | m³/s |
| Use Smith correlation chart to calculate the size of DC-001 | 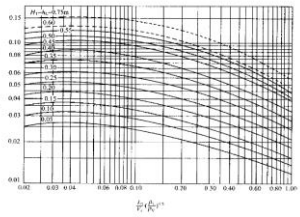 | | |
| | In DC-001, Let, | | |
| | The tray spacing $H_t$ | 0.50 | m |
| | The height of liquid layer on tray $h_L$ | 0.05 | m |
| | $\frac{L_S}{V_S}\left(\frac{\rho_L}{\rho_V}\right)^{0.5}$ | 0.024 | |
| | $H_t$-$h_L$ | 0.45 | m |
| | From the Smith chart, $C_{20}$ | 0.105 | |

| REV. | DESCRIPTION | DATE | BY | CHECK | APPROVED | DOCUMENT NO. |
|---|---|---|---|---|---|---|
| | | | | | | DC-001 |
| | | | | | | PAGE 3 OF 4 |

SEE PAGE 1

The University of Nottingham

UNITED KINGDOM · CHINA · MALAYSIA

| | | | |
|---|---|---|---|
| CLIENT: | Coates Chemicals | The University of Nottingham UNITED KINGDOM · CHINA · MALAYSIA | **CALCULATION SHEET** |
| LOCATION: | Cassel Works, Billingham TS23 1LE | | |
| SUBJECT: | HCN distillation column | | |
| PROJECT: | Irogen Cyanide and AMS Plant Replacem | | DOCUMENT NO.: DC-001 |
| JOB NO.: | N/A | | EQUIPMENT ITEM NO.: DC-001 |
| Rev. | 1 | | GROUP NO.: 6 |

## REACTIONS

| | | | Unit |
|---|---|---|---|
| The vapour velocity u | $u=C_{20}*((\rho_L-\rho_V)/\rho_V)^{0.5}$ | 1.962 | m/s |
| The diameter of the DC-001 | $D=(4V_S/\pi u)^{0.5}$ | 1.4 | m |
| Calculation of effective height of DC-001 | | | |
| | | | |
| Effective height of recification section $Z_R$ | $Z_R=(N_r-1)*H_L$ | 8 | m |
| Effective height of stripping section $Z_S$ | $Z_S=(N_s-1)*H_L$ | 3.5 | m |
| Height of manhole above feed plate | | 1 | m |
| Space at the top | 3.3ft | 1 | m |
| Space at the bottom | | 1 | m |
| The total effective height of DC-001 Z | | 14.5 | m |
| | | | |
| The yield stress of 304SS σ | | 170 | mpa |
| The minimum thickness of DC-001 T | | 2.10 | mm |
| | $t = \frac{PD}{2\sigma}$ | 0.0021 | m |
| | | | |
| Corrosion Allowance | | 3.0 | mm |
| Tolerance | | 0.51 | mm |
| The actual thickness of DC-001 $T_s$ | | 5.6 | mm |
| | | 0.0060 | m |
| The volume of the 304ss | | 0.374 | $m^3$ |
| The volume of DC-001 | | 20.67 | $m^3$ |
| | | | |
| The results of simulation with hysys | | | |

Steady State Profiles

| | Stage | Pressure [kPa] | Temp [C] | Net Liquid [kg/h] | Net Vapour [kg/h] |
|---|---|---|---|---|---|
| | | | Optional Estimates | | |
| Condenser | 0 | 101.3 | 25.69 | 1.406e+004 | 2.350e-005 |
| 1_Main Tower | 1 | 101.3 | 25.69 | 1.401e+004 | 2.076e+004 |
| 2_Main Tower | 2 | 111.9 | 28.18 | 1.407e+004 | 2.071e+004 |
| 3_Main Tower | 3 | 122.4 | 30.49 | 1.413e+004 | 2.077e+004 |
| 4_Main Tower | 4 | 133.0 | 32.65 | 1.419e+004 | 2.083e+004 |
| 5_Main Tower | 5 | 143.5 | 34.67 | 1.424e+004 | 2.089e+004 |
| 6_Main Tower | 6 | 154.1 | 36.58 | 1.430e+004 | 2.094e+004 |
| 7_Main Tower | 7 | 164.6 | 38.38 | 1.435e+004 | 2.099e+004 |
| 8_Main Tower | 8 | 175.2 | 40.10 | 1.440e+004 | 2.104e+004 |
| 9_Main Tower | 9 | 185.7 | 41.73 | 1.444e+004 | 2.109e+004 |
| 10_Main Tow | 10 | 196.3 | 43.30 | 1.449e+004 | 2.114e+004 |
| 11_Main Tow | 11 | 206.8 | 44.80 | 1.454e+004 | 2.119e+004 |
| 12_Main Tow | 12 | 217.4 | 46.24 | 1.458e+004 | 2.123e+004 |
| 13_Main Tow | 13 | 228.0 | 47.62 | 1.462e+004 | 2.128e+004 |
| 14_Main Tow | 14 | 238.5 | 48.97 | 1.466e+004 | 2.132e+004 |
| 15_Main Tow | 15 | 248.1 | 50.35 | 1.465e+004 | 2.136e+004 |
| 16_Main Tow | 16 | 259.6 | 52.13 | 1.440e+004 | 2.135e+004 |
| 17_Main Tow | 17 | 270.2 | 56.25 | 1.312e+004 | 2.110e+004 |
| 18_Main Tow | 18 | 280.7 | 69.32 | 3.266e+004 | 1.982e+004 |
| 19_Main Tow | 19 | 291.3 | 70.56 | 3.277e+004 | 2.159e+004 |
| 20_Main Tow | 20 | 301.8 | 71.77 | 3.287e+004 | 2.170e+004 |
| 21_Main Tow | 21 | 312.4 | 72.98 | 3.293e+004 | 2.179e+004 |
| 22_Main Tow | 22 | 322.9 | 74.34 | 3.286e+004 | 2.186e+004 |
| 23_Main Tow | 23 | 333.5 | 76.62 | 3.208e+004 | 2.179e+004 |
| 24_Main Tow | 24 | 344.0 | 83.60 | 2.827e+004 | 2.101e+004 |
| 25_Main Tow | 25 | 354.6 | 107.9 | 2.232e+004 | 1.720e+004 |
| Reboiler | 26 | 354.6 | 135.8 | 1.107e+004 | 1.125e+004 |

Composition Estimates

| | HCN | H2O | Sum |
|---|---|---|---|
| Condenser | 1.000 | 3.201e-016 | 1.000 |
| 1_Main T... | 1.000 | 4.278e-015 | 1.000 |
| 2_Main T... | 1.000 | 3.835e-014 | 1.000 |
| 3_Main T... | 1.000 | 3.205e-013 | 1.000 |
| 4_Main T... | 1.000 | 2.575e-012 | 1.000 |
| 5_Main T... | 1.000 | 2.001e-011 | 1.000 |
| 6_Main T... | 1.000 | 1.507e-010 | 1.000 |
| 7_Main T... | 1.000 | 1.103e-009 | 1.000 |
| 8_Main T... | 1.000 | 7.857e-009 | 1.000 |
| 9_Main T... | 1.000 | 5.454e-008 | 1.000 |
| 10_Main... | 1.000 | 3.695e-007 | 1.000 |
| 11_Main... | 1.000 | 2.446e-006 | 1.000 |
| 12_Main... | 1.000 | 1.584e-005 | 1.000 |
| 13_Main... | 0.9999 | 1.005e-004 | 1.000 |
| 14_Main... | 0.9994 | 6.241e-004 | 1.000 |
| 15_Main... | 0.9962 | 3.795e-003 | 1.000 |
| 16_Main... | 0.9776 | 2.235e-002 | 1.000 |
| 17_Main... | 0.8798 | 0.1202 | 1.000 |
| 18_Main... | 0.5269 | 0.4731 | 1.000 |
| 19_Main... | 0.5273 | 0.4727 | 1.000 |
| 20_Main... | 0.5276 | 0.4724 | 1.000 |
| 21_Main... | 0.5270 | 0.4730 | 1.000 |
| 22_Main... | 0.5217 | 0.4783 | 1.000 |
| 23_Main... | 0.4914 | 0.5086 | 1.000 |
| 24_Main... | 0.3413 | 0.6587 | 1.000 |
| 25_Main... | 4.853e-002 | 0.9515 | 1.000 |
| Reboiler | 3.286e-003 | 0.9967 | 1.000 |

| REV. | DESCRIPTION | DATE | BY | CHECK | APPROVED | DOCUMENT NO. |
|---|---|---|---|---|---|---|
| | | | | | | DC-001 |

SEE PAGE 1

PAGE 4 OF 4

## 1.4 Blender vessel BE-001 by Lisha Wei (20126940)

| | | | |
|---|---|---|---|
| CLIENT: | Lucite | The University of Nottingham UNITED KINGDOM · CHINA · MALAYSIA | **CALCULATION SHEET** |
| LOCATION: | Cassel Works, New Road, Billingham TS2 | | |
| SUBJECT: | H2SO4 dilution | | |
| PROJECT: | Hydrogen Cyanide and AMS Plant Replace | | DOCUMENT NO.: BE-001 |
| JOB NO.: | 2022-001 | | EQUIPMENT ITEM NO.: BE-001 |
| Rev. | | | GROUP NO.: 6 |

**Objectives:**

Calculation of the dimentions of sulfuric acid solution blender

**Input Documents:**

| | Document Title | Doc. Number | Rev. | Date |
|---|---|---|---|---|
| 3 | Mechanical Data | 1 | 1 | 4/27/2022 |
| 3 | Process Data | 2 | 1 | 4/27/2022 |
| 3 | Calculation sheet | 3 | 1 | 4/27/2022 |
| 3 | Calculation sheet 2 | 4 | 1 | 4/27/2022 |
| | Calculation sheet 3 | 5 | 1 | 4/27/2022 |
| | | | | |
| | | | | |
| | | | | |

**Assumptions:**

1. Residence time is 0.15 hr
2. the volume of sulfric acid is 0.5 times volume of blender
3. The extra diameter is 1.410m
4. Tolerance is 10%
5. The shaft is 1929 mm
6. The rotational speed is 155 rpm
7. The impeller diameter is 0.48*ID

**Summary of Results:**

The outside diameter of blender is 1500 mm
The inside diameter of blender is 1490 mm
The tan to tan length of blender is 1800 mm
The total length of blender is 2550 mm
The length of the shaft is 1650 mm
The diameter of impeller is 720 mm
The weigth of 316 SS used is 113 kg
The thickness of the blender is 9.53 mm
The standard power motor is 15 HP
One circular area is 1.206 $m^2$
The required power is 10982.8 w
Number of cicular is 19
The heat transfer area is 32.371 $m^2$
The total weight of BE-001 is 416 kg

| REV. | DESCRIPTION | DATE | BY | CHECK | APPROVED | DOCUMENT NO. |
|---|---|---|---|---|---|---|
| 1 | Final draft | 4/27/2022 | 0 | 0 | WYK/SJJ | BE-001 |

PAGE 1 OF 5

The University of Nottingham

UNITED KINGDOM · CHINA · MALAYSIA

| | |
|---|---|
| CLIENT: | Lucite |
| LOCATION: | Cassel Works, New Road, Billingham TS23 1LE |
| SERVICE: | H2SO4 dilution |
| PROJECT: | Hydrogen Cyanide and AMS Plant Replacement |
| JOB NO.: | 2022-001 |
| GROUP NO.: | 6 |

The University of Nottingham

UNITED KINGDOM · CHINA · MALAYSIA

# PROCESS DATA SHEET
# VERTICAL VESSEL

| | | | |
|---|---|---|---|
| UNIT NO.: | BE-001 | | |
| ITEM NO.: | BE-001 | NO. REQD.: | 1 |

REV

## PROCESS SKETCH

BE-001

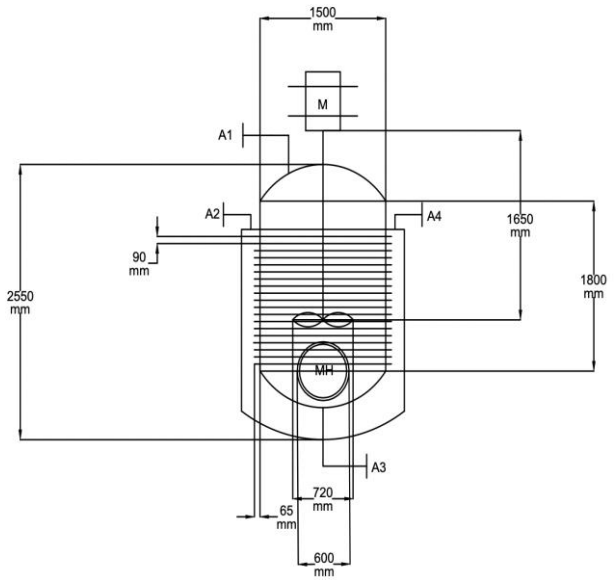


## MECHANICAL DESIGN DATA

| | | | | |
|---|---|---|---|---|
| Design Pressure | | barg | : | 0.5 |
| Vacuum design condition | Press bara : | None | @ Temp °C : | N/A |
| Pressure drop through internals | | bar | : | 0.5 |
| Maximum Design Temperature | | °C | : | 55 |
| Minimum Design Temperature | | °C | : | 5 |
| Minimum Ambient Temperature | | °C | : | -10 |
| steam out conditions | Press barg : | None | @ Temp °C : | N/A |
| Corrosion Allowance | | mm | : | 3.0 |
| Insulation Type | | | : | H |
| Insulation Thickness | | mm | : | By Others |
| Stress relieved (process reasons) | | | : | Yes |
| Inside Diameter | | mm | : | 1490 |
| Tan/Tan Length | | mm | : | 1800 |
| Head Type | | | : | Semi-elliptical |
| Total Volume | | m3 | : | 3.80 |

## MATERIALS OF CONSTRUCTION

| | | |
|---|---|---|
| Shell Plate | : | 316 SS |
| Head Plate | : | 316 SS |
| Internals | : | 316 SS |

## CONNECTION DETAILS

| No. | SIZE DN | FLANGE FINISH | FLANGE RATING | SERVICE |
|---|---|---|---|---|
| A1 | 15 | RF | 150# | A |
| A2 | 125 | RF | 150# | A |
| A3 | 15 | RF | 150# | A |
| A4 | 125 | RF | 150# | A |

## INTERNALS DETAILS

The inside diameter of blender is 1490mm

The number of circular is 19

Area of one circular is 1.206 $m^2$

The distance between one cicular and other cicular is 90 mm

## NOTES:

The diameter of manhole is 1000mm

The power motor is 15 HP

The material of circular is 304SS

The weight of the 316SS used is 109.767kg

The length of shaft is 2550 mm

The diameter of impeller is 720 mm

The outside diameter is 1500 mm

The total length of blender is 2550 mm

1

| REV. | DESCRIPTION | DATE | BY | CHECK | APPROVED | DOCUMENT NO. |
|---|---|---|---|---|---|---|
| 1 | Final draft | 4/27/2022 | LSW | HYC | YKW/SJJ | BE-001 |

SHEET 1 OF 5

The University of Nottingham

UNITED KINGDOM · CHINA · MALAYSIA

| | | |
|---|---|---|
| CLIENT: | Lucite | |
| LOCATION: | assel Works, New Road, Billingham TS23 1L | |
| SERVICE: | H2SO4 dilution | |
| PROJECT: | ydrogen Cyanide and AMS Plant Replaceme | |
| JOB NO.: | 2022-001 | |
| GROUP NO.: | 6 | |

The University of Nottingham

UNITED KINGDOM · CHINA · MALAYSIA

# PROCESS DATA SHEET
# VERTICAL VESSEL

| | | | |
|---|---|---|---|
| UNIT NO.: | BE-001 | | |
| ITEM NO.: | BE-001 | NO. REQD.: | 1 |

REV

**PROCESS DATA**

**FLUID DATA**

| | | |
|---|---|---|
| Description | : | 20wt% sulfuric acid |
| Flammable / Explosive | : | No / No |
| Toxic | : | No |
| Corrosive/erosive due to | : | sulfuric acid,which is corrosive material |

**OPERATING CONDITIONS**

| | | |
|---|---|---|
| Operating Pressure, barg | : | 0.5 |
| Operating Temperature, °C | : | 30 |

**Streams**

| **Design case** | Units | Maximum | Minimum | | Case 4 | Case 5 | Case 6 | Case 7 |
|---|---|---|---|---|---|---|---|---|
| **water added** | | | | | | | | |
| Mass Flow rate | kg/h | 8539.85 | 977.45 | | | | | |
| Density | kg/m3 | 999.93 | 999.93 | | | | | |
| Viscosity | cP | 1.52 | 1.52 | | | | | |
| Molecular weight | kg/kgmol | 18 | 18 | | | | | |
| **98wt% Sulfuric acid** | | | | | | | | |
| Mass Flow rate | kg/h | 2189.71 | 250.63 | | | | | |
| Density | kg/m3 | 1836 | 1836 | | | | | |
| Viscosity | cP | 21.5 | 21.5 | | | | | |
| Surface tension | dyne/cm | 124700 | 124701 | | | | | |
| Molecular weight (H2SO4) | kg/kgmol | 98 | 98 | | | | | |
| Molecular weight (H2O) | kg/kgmol | 18 | 18 | | | | | |
| **20wt% Sulfuric acid** | | | | | | | | |
| Mass Flow rate | kg/h | 10729.55 | 1228.08 | | | | | |
| Density | kg/m3 | 1133 | 1133 | | | | | |
| Viscosity | cP | 20 | 20 | | | | | |
| Surface tension | dyne/cm | 6104 | 6104 | | | | | |
| Molecular weight (H2SO4) | kg/kgmol | 98 | 98 | | | | | |
| Molecular weight (H2O) | kg/kgmol | 18 | 18 | | | | | |

Notes: the detial information of Cooling water:

Maxmun flow of CW: 108633.770 kg/hr

Minimun flow of CW :11949.715 kg/hr

The viscosity of CW is 0.8891cP (CW in) (CW out:0.8502cP)

The density of CW is 1000kg/m$^3$

The temperature of CW in is 25°C

The temperature of CW out is 27°C

| REV. | DESCRIPTION | DATE | BY | CHECK | APPROVED | DOCUMENT NO. |
|---|---|---|---|---|---|---|
| 1 | Final draft | 4/27/2022 | LSW | HYC | WYK/SJJ | |
| | | | | | | BE-001 |
| | | | | | | SHEET 2 OF 5 |

The University of Nottingham

UNITED KINGDOM · CHINA · MALAYSIA

| | | | |
|---|---|---|---|
| CLIENT: | Lucite | **CALCULATION SHEET** | |
| LOCATION: | Cassel Works, New Road, Billingham TS23 1 | | |
| SUBJECT: | H2SO4 dilution | | |
| PROJECT: | Hydrogen Cyanide and AMS Plant Replaceme | DOCUMENT NO.: | BE-001 |
| JOB NO.: | 2022-001 | EQUIPMENT ITEM NO.: | BE-001 |
| Rev. | | GROUP NO.: | 6 |

## REACTIONS

| | | Unit |
|---|---|---|
| Assumption: | | |
| 1. Residence time is 0.15hr | | |
| 2. the volume of sulfric acid is 0.5 times volume of blender | | |
| 3.tolerance is 10% | | |
| **98wt% Sulfuric acid entering the Blender:** | 2189.705 | |
| Mass flow rate of 98wt% Sulfuric acid ( see in mass balance document),$F_{98wt\%SA}$ | 2145.911 | kg/hr |
| Molar flow rate of 98wt% Sulfuric acid ( MVT=98,Molar flow rate=mass flow rate/ MVT) , $G_{98wt\%SA}$ | 21.897 | kmol/hr |
| Mass flow rate of water in 98wt%Sulfuric acid solution( see in mass balance document),Fwater with $_{98wt\%SA}$ | 43.794 | kg/hr |
| Molar flow rate of water in 98wt% Sulfuric acid solution ( MVT=18, Molar flow rate=mass flow rate/ MVT),$G_{water\ with\ 98wt\%SA}$ | 2.433 | kmol/hr |
| Volume flow rate of 98wt% Sulfuric acid solution, $V_{98wt\%}=(F_{98wt\%SA}+F_{water\ with\ 98wt\%SA})/\rho_{25}$ | 1.193 | $m^3$/hr |
| Density of 98wt% Sulfuric acid @25 °C, $\rho_{25}$ | 1836 | kg/$m^3$ |
| Pressure , $P_{25}$ | 1.5 | barg |
| Temperature $T_{sai}$ | 25 | °C |
| Viscoscity of 98wt% Sulfuric acid @ 25 °C, $\mu_{25}$ | 21.5 | cP |
| **Water entering the Blender:** | | |
| Mass flow rate of water (see in mass balance document) , $F_{(water)}$ | 8539.850 | kg/hr |
| Molar flow rate of water ( MVT=18,Molar flow rate=mass flow rate/ MVT),$G_{(water)}$ | 474.436 | kmol/hr |
| Volume flow rate of water, Vwater,$V_{water}=F_{water}/\rho_5$ | 8.540 | $m^3$/hr |
| Density of water @ 5°C,$\rho_5$ | 999.93 | kg/$m^3$ |
| Pressure, $P_5$ | 2 | barg |
| Temperature, T | 5 | °C |
| Viscoscity of water @ 5 oC,$\mu_5$ | 1.52 | cP |
| **20wt% Sulfuric acid in (out from) the Blender:** | | |
| Mass flow rate of 20wt% Sulfuric acid,$F_{20wt\%SA}=F_{98wt\%SA}$ | 2145.9 | kg/hr |
| Molar flow rate of 20wt% Sulfuric acid ( MVT=98,Molar flow rate=mass flow rate/ MVT),$G_{20wt\%SA}$ | 21.897 | kmol/hr |
| Mass flow rate of water in 20wt%Sulfuric acid solution,$F_{water\ with\ 20wt\%SA}=F_{water\ with\ 98wt\%SA}+F_{water}$ | 8583.644 | kg/hr |
| Volume flow rate of 20wt% Sulfuric acid solution, $V_{20wt\%}=(F_{20wt\%SA}+F_{water\ with\ 20wt\%SA})/\rho_{30}$ | 9.470 | $m^3$/hr |
| Molar flow rate of water in 20wt% Sulfuric acid solution ( MVT=18, Molar flow rate=mass flow rate/ MVT) | 476.869 | kmol/hr |
| Density of 20wt% Sulfuric acid @30 °C,$\rho_{30}$ | 1133 | kg/$m^3$ |
| Pressure , $P_{30}$ | 1 | barg |
| Temperature $T_{SAo}$ | 30 | °C |
| Viscoscity of 20wt% Sulfuric acid @ 30 oC, $\mu_{30}$ | 20 | cP |
| **Size of Blender calculation:** | | |
| The residence time, $T_R$ | 0.15 | hr |
| The volume flow rate of 20wt% sulfuric acid solution,$V_{20wt\%}$ | 9.5 | $m^3$/hr |
| Quantity of 20wt% sulfuric acid solution in the blender,$V_{total}=V_{20wt\%}*T_R$ | 1.421 | $m^3$ |
| The 20wt% sulfuric acid solution is 0.5 times the volume of Blender | 0.5 | none |
| The volume of Blender $V_B=V_{total}/0.5$ | 2.84 | $m^3$ |
| The height of Blender/the inner diameterof Blender, $H_B/D_{Bi}=1.2$ | | |
| The Cross-sectional area $A=(pi*D^2)/4$ | 1.639 | $m^2$ |
| The inner diamater of Blender $D_{Bi}=((4*V_B)/(1.2*pi))^{(1/3)}$ | 1.445 | m |
| The height of Blender,$H_B=1.2\ D_{Bi}$ | 1.734 | m |

| REV. | DESCRIPTION | DATE | BY | CHECK | APPROVED | DOCUMENT NO. |
|---|---|---|---|---|---|---|
| | | | | | | BE-001 |

SEE PAGE 1

PAGE 3 OF 5

The University of Nottingham

UNITED KINGDOM · CHINA · MALAYSIA

| | | | |
|---|---|---|---|
| CLIENT: | Lucite | **CALCULATION SHEET** | |
| LOCATION: | Cassel Works, New Road, Billingham TS23 1 | | |
| SUBJECT: | H2SO4 dilution | | |
| PROJECT: | Hydrogen Cyanide and AMS Plant Replaceme | DOCUMENT NO.: | BE-001 |
| JOB NO.: | 2022-001 | EQUIPMENT ITEM NO.: | BE-001 |
| Rev. | | GROUP NO.: | 6 |

## REACTIONS

| | | Unit |
|---|---|---|
| **material calculation-316ss** | | |
| Yield stress, $R_e(T_d)$ | 251.069 | $N/mm^2$ |
| Specific gravity | 7900 | $kg/m^3$ |
| Crrosion allowance Ca | 3 | mm |
| Tolerance, tol | 0.505 | mm |
| Allowable stress, $f=0.67*R_e(T_d)$ | 167.55 | $N/mm^2$ |
| Calculation thickness d=Do-Ca-tol | 2.5 | mm |
| Assumed nominal wall thickness $d_n$ | 6 | mm |
| Assumed outdiameter Do | 1445 | mm |
| Insider diameter Di | 1445.01 | mm |
| $D_i = D_e - 2*d$ | | |
| Required wall thickne $d_r = \frac{P_d*D_e}{(2*z*f + P_d)}$ | 2.16 | mm |
| Nominal required thickne $d_{rn} = d_r + Ca + tol$ | 5.665 | mm |
| The standard thickness | 9.530 | mm |
| The theoretical inside diameter was calculated, therefore, the theoretical outside diameter, Dot | 1455 | mm |
| The outside diameter of the blender, OD | 1500 | mm |
| The actual inside diameter of the blender, ID=OD-standard thickness | 1490 | mm |
| Theoretical l tan to tan length of blender Ht | 1789 | mm |
| Actual tan to tan length of blender H | 1800 | mm |
| The heigth of the semi-ellipitical is 1/4 ID | 373 | mm |
| Actual volume of blender V=PI*ID^2/4*H+2*volume of semi-ellipitical | 3797116319 | $mm^3$ |
| | 3.797 | $m^3$ |
| The surface area of blender, A=PI*OD*H+PI*hs*OD | 10.23 | $m^2$ |
| The density of 316 SS, $\rho_{316}$ | 7900 | $kg/m^3$ |
| The weigth of 316 was used, $W_{316}=(\rho_{316}*PI*(OD-ID)^2/4+PI*(ID)^2/4*(OD-ID)*2)$ | 113.227 | kg |
| The shaft of belender, S | 2.55 | m |
| The diameter of impeller, $Dim=0.48*(ID)$ | 0.72 | m |
| $Re=(\rho_{30}*N*Dim^2/\mu_{30})$ | 74904.7424 | |
| **Re>10000, the flow in the blender is turbulent** | | |
| Rotational speed N, | 155 | rpm |
| The power requirement for impeller $Power, P = N_p \rho N^3 D^5$ | 10982.8 | W |
| | 14.7 | HP |
| Np is power number | 3 | |
| The standard motor power | 15.0 | HP |
| D is the diameter of impeller | | |
| Note: the theoretical inside diameter was calculated by assumption H/ID=1.2 | | |
| the actucal inside diamater was calculated from the property of material used | | |
| The distance between impeller and belender bottom is0.75 *Dim | | |
| The total weight of BE-001 is 416 kg | | |

| REV. | DESCRIPTION | DATE | BY | CHECK | APPROVED | DOCUMENT NO. |
|---|---|---|---|---|---|---|
| | | | | | | BE-001 |

SEE PAGE 1

The University of Nottingham

UNITED KINGDOM · CHINA · MALAYSIA

| | | | |
|---|---|---|---|
| CLIENT: | Lucite | **CALCULATION SHEET** | |
| LOCATION: | Cassel Works, New Road, Billingham TS23 1 | | |
| SUBJECT: | H2SO4 dilution | | |
| PROJECT: | Hydrogen Cyanide and AMS Plant Replaceme | DOCUMENT NO.: | BE-001 |
| JOB NO.: | 2022-001 | EQUIPMENT ITEM NO.: | BE-001 |
| Rev. | | GROUP NO.: | 6 |

## REACTIONS

| | | Unit |
|---|---|---|
| **Jacket calculation** | | |
| Sulfuric acid dilution heat, $h_s$ | 85.5 | kJ/mol |
| Heat generation after sulfuric acid dilution, $Qd=h_s*G_{98wt\%SA}$ | 1872197.81 | kJ/hr |
| Average of heat capacity of Sufuric acid @25 and 30 °C, Cp,s | 1.3945 | kJ/kg.C |
| Energy needed for sulfuric acid @30 oC, Qs=Cp,s*F98wt%SA*(Tsao-Tsai) | 14962.364 | kJ/hr |
| Average of heat capacity of Sufuric acid @5 and 30 °C, Cp,w | 4.2 | kJ/kg.C |
| Energy needed for water @30 oC, Qw | 896684.214 | kJ/hr |
| Energy release from solution in the Blender (energy absorded by cooling water), Q=Qd-Qs-Qw | 960551.231 | kJ/hr |
| The heat loss | 0.950 | |
| **Cooling water in:** | | |
| Mass flow rate of cooling water, $F_{cwi}$ | 108633.770 | kg/hr |
| Molar flow rate of water, $G_{cwi}=F_{cwi}$/MWT(H2O=18) | 6035.209 | kmol/hr |
| Volume flow rate of cooling water, $V_{cwi}=F_{cwi}/\rho_{cwi}$ | 108.63377 | $m^3$/hr |
| Density of coolingwater @25 °C, $\rho_{cwi}$ | 1000 | kg/$m^3$ |
| Pressure, P | 1 | barg |
| Temperature T, | 25 | °C |
| Viscoscity of cooling water @ 25 oC, $\mu_{cwi}$ | 0.8891 | cP |
| **Cooling water out:** | | |
| Mass flow rate of cooling water, $F_{cwo}$ (see in mass balance document) | 108633.770 | kg/hr |
| Molar flow rate of water, $G_{cwo}$ | 6035.209 | kmol/hr |
| Volume flow rate of cooling water, $Vcwi=F_{cwo}/\rho_{cwo}$ | 108.63377 | $m^3$/hr |
| Density of coolingwater @27 °C, $\rho_{cwo}$ | 1000 | kg/$m^3$ |
| Pressure, P | 1 | barg |
| Temperature T | 27 | °C |
| Viscoscity of cooling water @ 27 oC, $\mu_{cwo}$ | 0.8502 | cP |
| **Heat transfer area calculation:** | | |

$$\Delta T_{lm} = \frac{(T_{h,i}-T_{c,o})-(T_{h,o}-T_{c,i})}{\ln\left(\frac{T_{h,i}-T_{c,o}}{T_{h,o}-T_{c,i}}\right)}$$

| | | |
|---|---|---|
| $\Delta T_{lm}$ is the appropriate average of temperature difference between cooling water and sulfuric acid solution | 3.915 | K |
| $T_{h,i}$ is the temperature of surfuric acid solution in BE | 303 | K |
| $T_{h,o}$ is the temperature of sulfuric acid solution out from BE | 303 | K |
| $T_{c,i}$ is the temperature of cooling water in | 298 | K |
| $T_{c,o}$ is the temperature of cooling water out | 300 | K |

$$\dot{Q} = UA_s\,\Delta T_m$$

| | | |
|---|---|---|
| $Q$ is the heat from the process | 253478.797 | W |
| $U$ is the heat transfer coefficient | 2000.0 | W/($m^2$*K) |
| $A_s$ is the heat transfer area | 32.371 | $m^2$ |
| Area of Blender A | 10.233 | $m^2$ |
| Extra contact area Ae | 22.138 | $m^2$ |
| The extra diameter, De | 1.510 | m |
| the extra thickness | 0.065 | m |
| One circular area | 1.206 | $m^2$ |
| Number of circulation (theoretical) | 18.355 | |
| Number of circulation (actual) | 19 | |

| REV. | DESCRIPTION | DATE | BY | CHECK | APPROVED | DOCUMENT NO. |
|---|---|---|---|---|---|---|
| | | | | | | BE-001 |

SEE PAGE 1

## 1.5 Wastewater reactor MT-003 by Yukun Wang (20126873)

| | | | |
|---|---|---|---|
| CLIENT: | Lucite | The University of Nottingham<br>UNITED KINGDOM · CHINA · MALAYSIA | **CALCULATION SHEET** |
| LOCATION: | ssel Works, New Road, Billingham TS23 1 | | |
| SUBJECT: | Wastewater treatment | | |
| PROJECT: | drogen Cyanide and AMS Plant Replacem | | DOCUMENT NO.: MT-003 |
| JOB NO.: | 2022-001 | | EQUIPMENT ITEM NO.: MT-003 |
| Rev. | 1 | | GROUP NO.: 6 |

**Objectives:**

To calculate some parameters and the dimensions of mixing reactor (wastewater reactor).

**Input Documents:**

| | Document Title | Doc. Number | Rev. | Date |
|---|---|---|---|---|
| 3 | Mechanical Data | 1 | | |
| 3 | Process Data | 2 | | |
| 3 | Calculation Page 1 | 3 | | |
| 3 | Calculation Page 2 | 4 | | |
| | | | | |
| | | | | |
| | | | | |
| | | | | |

**Assumptions:**

The liquid velocity is constant.

The HCN in the wastewater is completely removed.

The impact of heat loss is ignored.

**Summary of Results:**

Dimension of Vertical Vessel (total volume is 12 $m^3$, tan/tan Height is 2400 mm, diameter is 2000 mm, the thickness of 2.815 mm. The power motor is 75 HP, the impeller diameter is 1000 mm, the shaft of blender is 2840 mm and the power requirement for impeller is 51720 W.

| REV. | DESCRIPTION | DATE | BY | CHECK | APPROVED | DOCUMENT NO. |
|---|---|---|---|---|---|---|
| 1 | Final draft | 4/27/2022 | WYK | CZY | CZY/SJJ | MT-003 |

PAGE 1 OF 5

The University of Nottingham

UNITED KINGDOM · CHINA · MALAYSIA

| | |
|---|---|
| CLIENT: | Lucite |
| LOCATION: | Cassel Works, New Road, Billingham TS23 1LE |
| SERVICE: | Wastewater treatment |
| PROJECT: | Hydrogen Cyanide and AMS Plant Replacement |
| JOB NO.: | 2022-001 |
| GROUP NO.: | 6 |

The University of Nottingham

UNITED KINGDOM · CHINA · MALAYSIA

# PROCESS DATA SHEET
# VERTICAL VESSEL

| | | | |
|---|---|---|---|
| UNIT NO.: | MT-003 | | |
| ITEM NO.: | MT-003 | NO. REQD.: | 1 |

REV.

## PROCESS SKETCH

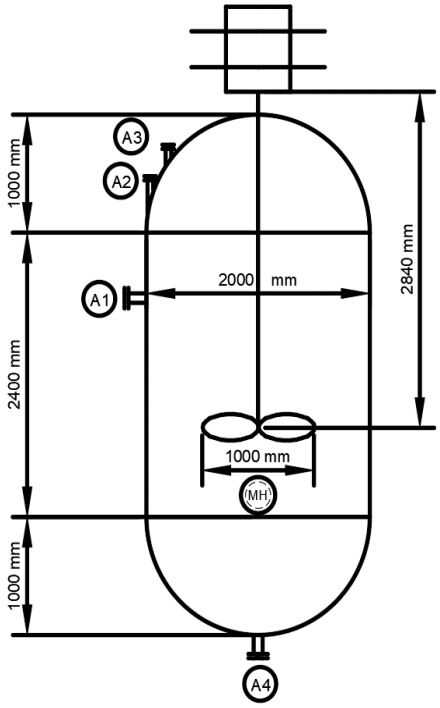


## MECHANICAL DESIGN DATA

| | | | | |
|---|---|---|---|---|
| Design Pressure | | barg | : | 0.5 |
| Vacuum design condition | Press bara : | None | @ Temp °C : | 25 |
| Pressure drop through internals | | bar | : | 0.5 |
| Maximum Design Temperature | | °C | : | 50 |
| Minimum Design Temperature | | °C | : | 0 |
| Minimum Ambient Temperature | | °C | : | -10 |
| Steamout conditions | Press barg : | None | @ Temp °C : | N/A |
| Corrosion Allowance | | mm | : | 1.5 |
| Insulation Type | | | : | PP |
| Insulation Thickness | | mm | : | 0.8 |
| Vessel thickness | | mm | | 2.815 |
| Stress relieved (process reasons) | | | : | Yes |
| Inside Diameter | | mm | : | 2000 |
| Tan/Tan Length | | mm | : | 2400 |
| Head Type | | | : | Semi-elliptical |
| Total Volume | | $m^3$ | : | 12 |

## MATERIALS OF CONSTRUCTION

| | | |
|---|---|---|
| Shell Plate | : | 316 SS |
| Head Plate | : | 316 SS |
| Internals | : | 316 SS |

## CONNECTION DETAILS

| No. | SIZE DN | FLANGE FINISH | FLANGE RATING | SERVICE |
|---|---|---|---|---|
| A1 | 15 | RF | 150# | B |
| A2 | 50 | RF | 150# | B |
| A3 | 6 | RF | 150# | Y |
| A4 | 15 | RF | 150# | Y |

## INTERNALS DETAILS

There's a blender inside, and the diameter of impeller is 1 m, and the shaft of blender is 2.84 m.The power motor is 75 HP and the power requirement for impeller is 51720 W

## NOTES:

A man hole should be added, and its diameter is about 1000 mm.

Assume the HCN in the wastewater is completely removed.

Assume the total volumne of the mixing reactor equals to a sphere plus a cylinder

Asssume the diameter of impeller is half the diameter of the mixing reactor.

According to the requirement about the accuracy of the data provided datasheets the volume is rounded up to 2 significant figures, and the linear dimensions (mm) is rounded up to the nearest 50 mm for small (less than 2000 mm diameter) vessel and to 100 mm for large diameter vessels.

| REV. | DESCRIPTION | DATE | BY | CHECK | APPROVED | DOCUMENT NO. |
|---|---|---|---|---|---|---|
| 1 | Final draft | 4/27/2022 | WYK | CZY | CZY/SJJ | MT-003 |
| | | | | | | SHEET 1 OF 4 |

The University of Nottingham

UNITED KINGDOM · CHINA · MALAYSIA

| | | | |
|---|---|---|---|
| CLIENT: | Lucite | The University of Nottingham<br>UNITED KINGDOM · CHINA · MALAYSIA | **PROCESS DATA SHEET**<br>**VERTICAL VESSEL** |
| LOCATION: | Cassel Works, New Road, Billingham TS23 1LE | | |
| SERVICE: | Wastewater treatment | | |
| PROJECT: | Hydrogen Cyanide and AMS Plant Replacement | | UNIT NO.: MT-003 |
| JOB NO.: | 2022-001 | | ITEM NO.: MT-003 NO. REQD.: 1 |
| GROUP NO.: | 6 | | |

REV **PROCESS DATA**

**FLUID DATA**

| | | |
|---|---|---|
| Description | : | Hydrogen peroxide and wastewater containing HCN |
| Flammable / Explosive | : | No / Yes |
| Toxic | : | Yes |
| Corrosive/erosive due to | : | Hydrogen peroxide and waste water containing HCN are both corrosive |

**OPERATING CONDITIONS**

| | | |
|---|---|---|
| Operating Pressure, barg | : | 0.5 |
| Operating Temperature, °C | : | 25 |

**Separator Outlet Streams**

| **Design case** | Units | Case 1 Maximum | Case 2 Minimum | Case 3 | Case 4 | Case 5 | Case 6 | Case 7 |
|---|---|---|---|---|---|---|---|---|
| **A1 Inlet Data** | | | | | | | | |
| Mass Flow rate | kg/h | 8243.4 | 943.5 | | | | | |
| Density | kg/m3 | 967.2 | 967.2 | | | | | |
| Viscosity | cP | 0.3694 | 0.3694 | | | | | |
| Molecular weight | kg/kgmol | 18 | 18 | | | | | |
| **A2 Inlet Data** | | | | | | | | |
| Mass Flow rate | kg/h | 15309.2 | 1752.3 | | | | | |
| Density | kg/m3 | 963.2 | 963.2 | | | | | |
| Viscosity | cP | 0.3646 | 0.3646 | | | | | |
| Molecular weight | kg/kgmol | 18 | 18 | | | | | |
| **A3 Inlet Data** | | | | | | | | |
| Mass Flow rate | kg/h | 160.8 | 18.4 | | | | | |
| Density | kg/m3 | 1097 | 1097 | | | | | |
| Viscosity | cP | 1.036 | 1.036 | | | | | |
| Molecular weight | kg/kgmol | 21.2 | 21.2 | | | | | |
| **A4 Outlet Data** | | | | | | | | |
| Mass Flow rate | kg/h | 23713.4 | 2714.2 | | | | | |
| Density | kg/m3 | 1000 | 1000 | | | | | |
| Viscosity | cP | N/A | N/A | | | | | |
| Molecular weight | kg/kgmol | 18.04 | 18.04 | | | | | |

Notes: During the whole operation of the system, the flow rates of vapour and liquid are between case 1 and case 2. The properties of vapour phase and liquid phase are also between case 1 and case 2.

| REV. | DESCRIPTION | DATE | BY | CHECK | APPROVED | DOCUMENT NO. |
|---|---|---|---|---|---|---|
| 1 | Final draft | 4/27/2022 | WYK | CZY | CZY/SJJ | MT-003 |
| | | | | | | |
| | | | | | | SHEET 2 OF 4 |

| | | | |
|---|---|---|---|
| CLIENT: | Lucite | The University of Nottingham UNITED KINGDOM · CHINA · MALAYSIA | **CALCULATION SHEET** |
| LOCATION: | Cassel Works, New Road, Billingham TS23 1LE | | |
| SERVICE: | Wastewater treatment | | |
| PROJECT: | Hydrogen Cyanide and AMS Plant Replacement | | DOCUMENT NO.: MT-003 |
| JOB NO.: | 2022-001 | | EQUIPMENT ITEM NO.: MT-003 |
| GROUP NO.: | 6 | | GROUP NO.: 6 |

## REACTIONS

In this mixing tank, the hydrogen cyanide in wastewater will be oxidized by hydrogen peroxide. Firstly, the cyanic acid and water will be produced as follows,

$$HCN + H_2O_2 \rightarrow HOCN + H_2O \quad (1)$$

Then, the HOCN will decompose into ammonia and carbon dioxide as follows,

$$HOCN + H_2O \rightarrow NH_3 + CO_2 \quad (2)$$

Therefore, the total chemical equation is

$$HCN + H_2O_2 \rightarrow NH_3 + CO_2 \quad (3)$$

| | | | | Unit |
|---|---|---|---|---|
| 1 | Mole balance | $V = \frac{F_{H_2O_{2_0}} - F_{H_2O_2}}{-r_{H_2O_2}}$ | | |
| 2 | Rate law | $-r_{H_2O_2} = kC_{H_2O_2}$ | | |
| 3 | Stoichiometry | According to the chemical reaction, $\theta_{H_2O_2} = 1 \quad S_{H_2O_2} = -1 \quad \delta = 0 \quad \varepsilon = 0$ | | |
| | | Therefore, $C_{H_2O_2} = C_{H_2O_{2_0}} \cdot (1 - X)$ | | |
| 4 | Combine | $V = \frac{F_{H_2O_{2_0}} - F_{H_2O_2}}{kC_{H_2O_2}}$ | | |
| | k | According to the references, assume the specific reaction rate (constant) is | 3.840 | h^(-1) |
| | $F_{H_2O_{2_0}}$ | Initial liquid molar flowrate of $H_2O_2$ | 1.50 | kmol/h |
| | $F_{H_2O_2}$ | Liquid molar flowrate of $H_2O_2$ at the outlet | 0.07 | kmol/h |
| | $M_{outlet}$ | Total mass flowrate of the liquid at the outlet | 23713.000 | kg/hr |
| | $\rho_{outlet}$ | Since most of the composition is water, assume that the liquid has the same density at the outlet as water | 1000 | kg/m^3 |
| | $V_{outlet}$ | Total volumn of the liquid at the outlet | 23.713 | m^3 |
| | $C_{H_2O_2}$ | Concentration of $H_2O_2$ at the outlet | 0.060 | kmol/(m^3) |
| | Vminimum | Minimum volumne of the mixing reactor | 6.18 | m^3 |
| | | For safety, smooth operation andsteady state, assume the volumne should be increased by a factor of 1.8 | | |
| | Vtheoretical | $V_{theoretical} = 1.8V_{minimum}$ | 11.1 | m^3 |

| REV. | DESCRIPTION | DATE | BY | CHECK | APPROVED | DOCUMENT NO. |
|---|---|---|---|---|---|---|
| | | | | | | MT-003 |
| | | | | | | PAGE 3 OF 4 |

SEE PAGE 1

The University of Nottingham

UNITED KINGDOM · CHINA · MALAYSIA

| | | | |
|---|---|---|---|
| CLIENT: | Lucite | The University of Nottingham UNITED KINGDOM · CHINA · MALAYSIA | **CALCULATION SHEET** |
| LOCATION: | Cassel Works, New Road, Billingham TS23 1LE | | |
| SERVICE: | Wastewater treatment | | |
| PROJECT: | Hydrogen Cyanide and AMS Plant Replacement | | DOCUMENT NO.: MT-003 |
| JOB NO.: | 2022-001 | | EQUIPMENT ITEM NO.: MT-003 |
| GROUP NO.: | 6 | | GROUP NO.: 6 |

## REACTIONS

| | | | | Unit |
|---|---|---|---|---|
| | | | | |
| | According to the reference, assume the height-diameter ratio of the reactor is 1.2. | | 1.2 | |
| | Therefore, h=1.2D=2.4r | | | |
| | The total volumne of the mixing reactor could be calculated as $V = \pi r^2 \cdot h + \frac{4}{3}\pi r^3$ | | | |
| D | Therefore, the diameter of the mixing reactor is | | 1.96 | m |
| | | round up to | 2000 | mm |
| $D_{actual}$ | The actual designed diameter of the mixing reactor | = | 2 | m |
| h | The height of the wall of the mixing reactor | | 2.36 | m |
| $h_{actual}$ | The actual designed height of the wall of the mixing reactor | round up to | 2400 | mm |
| | | = | 2.4 | m |
| $V_{actual}$ | The actual volume could be calculated (use the $D_{actual}$ and $h_{actual}$ after) | | 11.7226667 | $m^3$ |
| | | = | 12 | $m^3$ |
| | The thickness of the mixing reactor could be calculated by $t = \frac{PD}{2\sigma}$ | | | |
| P | Pressure of the mixing reactor | | 0.15 | mpa |
| σ | The yield stress of 316SS | | 170 | mpa |
| t | The minimum thickness of the mixing reactor | | 0.001059 | m |
| | | | 1.1 | mm |
| $t_{vessel}$ | The total thickness could be calculated as follows, | | | |
| | $t_{vessel} = (t + Corrosion\ Allowance) \cdot (1 + 10\%)$ | | | |
| $t_{vessel}$ | The total thickness of the vessel | | 2.815 | mm |
| | To calculate the size of the blender, | | | |
| $D_{impeller}$ | The diameter of impeller $D_{impeller}$=1/2*(D) | | 1.00 | m |
| S | According to the reference, the distance between impeller and bottom of the tank should be 0.75$D_{impeller}$ | | | |
| | Therefore, the shaft of belender | | 2.84 | m |
| | Re=$\rho_{30}$*N*$D_{impeller}$^2/μ | | 64583.33 | |
| | Re>10000,the flow in the blender is turbulent | | | |
| | Rotational speed N, | | 155 | rpm |
| $P_{power}$ | The power requirement for impeller, Ppower $P_{power} = N_p \rho N^3 D_{impeller}^5$ | | 51720.49 | W |
| | | | 70.37 | HP |
| Np | Np is power number | | 3 | |
| | The standard motor power | | 75 | HP |
| | Note: assume the total volumne of the mixing reactor equals to a sphere plus a cylinder, and assume the diameter of impeller is half the diameter of the mixing reactor. According to the requirement about the accuracy of the data provided datasheets, the volume is rounded up to 2 significant figures, and the linear dimensions (mm) is rounded up to the nearest 50 mm for small (less than 2000 mm diameter) vessels, and to 100 mm for large diameter vessels. | | | |

| REV. | DESCRIPTION | DATE | BY | CHECK | APPROVED | DOCUMENT NO. |
|---|---|---|---|---|---|---|
| | | | | | | MT-003 |
| | | | | | | PAGE 4 OF 4 |

SEE PAGE 1

The University of Nottingham

UNITED KINGDOM · CHINA · MALAYSIA

## 1.6 Flash column FC-001 by Jiajie Sun (20125123)

| | | | |
|---|---|---|---|
| CLIENT: | Lucite | The University of Nottingham UNITED KINGDOM · CHINA · MALAYSIA | **CALCULATION SHEET** |
| LOCATION: | Cassel Works, Billingham TS23 1LE | | |
| SUBJECT: | Natural Gas Separation | | |
| PROJECT: | drogen Cyanide and AMS Plant Replacem | | DOCUMENT NO.: FC-001 |
| JOB NO.: | 2022-001 | | EQUIPMENT ITEM NO.: FC-001 |
| Rev. | | | GROUP NO.: Group 6 |

**Objectives:**

To calculate some parameters and the dimensions of the natural gas separator (flash column)

**Input Documents:**

| | Document Title | Doc. Number | Rev. | Date |
|---|---|---|---|---|
| 3 | Calculation Page 1 | 1 | 1 | 4/22/2022 |
| 3 | Calculation Page 2 | 2 | 1 | 4/22/2022 |
| 3 | Calculation Page 3 | 3 | 1 | 4/22/2022 |
| 3 | Mechanical Data | 4 | 1 | 4/22/2022 |
| | Process Data | 5 | 1 | 4/22/2022 |
| | | | | |
| | | | | |
| | | | | |

**Assumptions:**

Liquid in the head is ignored

The velocity of liquid droplet is constant

The particle of liquid are all spherical

The impact of heat loss is ignored

**Summary of Results:**

Dimension of Vertical Vessel (tan/tan Height 3200mm, Outer Diameter 1200mm, Inner Diameter 1000mm)

2

2

| REV. | DESCRIPTION | DATE | BY | CHECK | APPROVED | DOCUMENT NO. |
|---|---|---|---|---|---|---|
| 1 | Final draft | 4/22/2022 | SJJ | GYA | GYA/CZY | |
| | | | | | | FC-001 |
| | | | | | | |
| | | | | | | PAGE 1 OF 6 |

| | | | |
|---|---|---|---|
| CLIENT: | Lucite | **CALCULATION SHEET** | |
| LOCATION: | Cassel Works, Billingham TS23 1LE | | |
| SUBJECT: | Natural Gas Separation | | |
| PROJECT: | ydrogen Cyanide and AMS Plant Replaceme | DOCUMENT NO.: | FC-001 |
| JOB NO.: | 2022-001 | EQUIPMENT ITEM NO.: | FC-001 |
| Rev. | | GROUP NO.: | Group 6 |

## REACTIONS

| | | Unit |
|---|---|---|
| Because british standard is applied in the calculation, there are a lot of conversion between BS unit and SI unit in the sheets | | |
| This separation is a low-pressure process, thus, the ideal gas equation can be applied. | | |

$$PV = nRT$$

$$Q_V = \frac{N_V RT}{P}$$

| | | |
|---|---|---|
| Molar flow rate of vapour, Nv=total molar flow rate x vapour fraction=354.9 x 0.9302 | 330.12798 | kmol/h |
| | 330128 | mol/h |
| Ideal gas constant, R | 8.31 | Pa m3/mol K |
| Separation temparature, T | 127 | K |
| Pressure | 150000 | Pa |
| Vapour volume flow rate, Qv | 2322.71458 | m3/h |
| Terminal velocity of the separation vessel (Sauders-Brown Equation) | | |

$$U_T = K\sqrt{\frac{(\rho_L - \rho_V)}{\rho_V}}$$

| | | |
|---|---|---|
| Where, | | |
| Density of liquid, ρL | 608.7 | kg/m3 |
| Density of vapour, ρV | 2.451 | kg/m3 |
| Separator coefficient, K, when P=21.75psia $15 \leqslant P1 \leqslant 40$ $K = 0.35$ | 0.35 | |
| Terminal velocity, UT | 5.50455108 | ft/s |
| Vapour velocity $U_V = 0.75U_T$ | 4.12841331 | ft/s |
| Separator inner diameter equation (D_VD represent demister diameter, if demister is applied) | | |

$$D_{VD} = \sqrt{\frac{4Q_V}{\pi U_V}}$$

| | | |
|---|---|---|
| Vapour volume flow rate, Qv | 2322.71458 | m3/h |
| Conversion of m3/h to ft3/s is x 0.00981 | 22.7858301 | ft3/s |
| Vapour velocity, Uv | 4.12841331 | ft/s |
| Demister diameter, D_VD (π=3.14) | 2.65158781 | ft |
| Conversion of ft to in is x 12 | 31.8190537 | in |
| The calculated inner diameter of the separator, D should be demister diameter+ (3~6 in) and be rounded to next 6 in | 36 | in |
| Convert to mm and rounded to next 100mm '916 round to | 1000 | mm |

$$V_H = T_H Q_L$$

| | | |
|---|---|---|
| Liquid volume flow rate, QL | 19.22 | m3/h |
| Conversion of m3/h to m3/min =/60 | 0.32033333 | m3/min |
| Retention time T_H is set to be | 2 | min |
| Liquid holdup volume in the separator, V_H | 0.64066667 | m3 |

$$V_S = T_S Q_L$$

| | | |
|---|---|---|
| Buffer time T_S is normally set to be the half of the retention time | 1 | min |
| Liquid buffer volume in the separator, V_S | 0.32033333 | m3 |
| For vertical separator (diameter<=4ft , pressure < 300psia), the low liquid level, H_LLL is normally | 15 | in |
| Convert to mm and rounded to next 100mm | 400 | mm |

| REV. | DESCRIPTION | DATE | BY | CHECK | APPROVED | DOCUMENT NO. |
|---|---|---|---|---|---|---|
| | | | | | | FC-001 |

SEE PAGE 1

The University of Nottingham

UNITED KINGDOM · CHINA · MALAYSIA

| | | | |
|---|---|---|---|
| CLIENT: | Lucite | **CALCULATION SHEET** | |
| LOCATION: | Cassel Works, Billingham TS23 1LE | | |
| SUBJECT: | Natural Gas Separation | | |
| PROJECT: | ydrogen Cyanide and AMS Plant Replaceme | DOCUMENT NO.: | FC-001 |
| JOB NO.: | 2022-001 | EQUIPMENT ITEM NO.: | FC-001 |
| Rev. | | GROUP NO.: | Group 6 |

## REACTIONS

| | | Unit |
|---|---|---|
| $H_H = \frac{4V_H}{\pi D^2}$ | | |
| Height from low liquid level to normal liquid level, H_H | 0.81617834 | m |
| Convert to mm and rounded to next 100mm | 900 | mm |
| $H_S = \frac{4V_S}{\pi D^2}$ | | |
| Height from normal liquid level to high liquid level, H_S | 0.40802548 | m |
| Convert to mm and rounded | 500 | mm |
| $D_{NIN} > 3.02 \times 10^{-3} \times \sqrt{Q_L + Q_V} \times \sqrt[4]{\rho_V}$ | | |
| Liquid volume flow rate, Q_L | 19.2 | m3/h |
| Vapour volume flow rate, Q_V | 2322.7 | m3/h |
| Density of vapour, ρV | 2.451 | kg/m3 |
| Diameter of nozzel inlet, D_NIN > | 0.183 | m |
| Convert to mm and rounded to the minimum 100mm | 200 | mm |
| $H_{LIN} = 300 + 0.5 \times D_{NIN}$ | | |
| Height from high liquid level to the centre of nozzel inlet, H_LIN | 400 | mm |
| $H_D = 0.5 \times D$ | | |
| Height from the centre of nozzel inlet to demister, H_D | 500 | mm |
| $H_{TOP} = 0.15 \times D$ | | |
| Height from demister to the tangent line of separator top, H_TOP | 150 | mm |
| Height of demister, H_DEM | 150 | mm |
| $H_T = H_{LLL} + H_H + H_S + H_{LIN} + H_D + H_{DEM} + H_{TOP}$ | | |
| The total height of the separator, H_T | 3200 | mm |
| $f = 0.67 \times R_e$ | | |
| Yield stress, Re of 316SS | 275.8 | N/mm2 |
| Allowable stress, f | 184.8 | N/mm2 |
| $d_r = \frac{P_d * D_e}{(2*z*f + P_d)} =$ | | |
| Designed pressure, Pd | 0.15 | N/mm2 |
| Expected diameter, De | 1000 | mm |
| Strength reduction coefficient, z | 1 | |
| Required wall thickness, dr | 0.41 | mm |
| $d_n = d_r + tol + Ca$ | | |
| The tolerance, tol of 316SS is set to be 10% and rounded | 2 | mm |
| Corrosion allowance, Ca | 1.5 | mm |
| Nominal required thckness, dn | 3.91 | mm |
| STD 316SS thickness of a 1000mm OD unit is | 9.53 | mm |
| The inner diameter of the above unit is 1000-2*9.53 | 980.94 | mm |
| 980.94mm>916mm 1000 outer diameter is ok | | |

| REV. | DESCRIPTION | DATE | BY | CHECK | APPROVED | DOCUMENT NO. |
|---|---|---|---|---|---|---|
| | | | | | | FC-001 |

SEE PAGE 1

PAGE 3 OF 6

The University of Nottingham

UNITED KINGDOM · CHINA · MALAYSIA

| | | | |
|---|---|---|---|
| CLIENT: | Lucite | **CALCULATION SHEET** | |
| LOCATION: | Cassel Works, Billingham TS23 1LE | | |
| SUBJECT: | Natural Gas Separation | | |
| PROJECT: | ydrogen Cyanide and AMS Plant Replaceme | DOCUMENT NO.: | FC-001 |
| JOB NO.: | 2022-001 | EQUIPMENT ITEM NO.: | FC-001 |
| Rev. | | GROUP NO.: | Group 6 |

## REACTIONS

| | | Unit |
|---|---|---|
| The volume, V of 316SS used = π x 1 x 3.2 x 0.00953 | 0.09575744 | m3 |

$$m = \rho \times V$$

| | | |
|---|---|---|
| The density of 316SS, ρ | 7850 | kg/m3 |
| The mass of 316SS used (without head) | 751.695904 | kg |

| REV. | DESCRIPTION | DATE | BY | CHECK | APPROVED | DOCUMENT NO. |
|---|---|---|---|---|---|---|
| | | | | | | FC-001 |

SEE PAGE 1

PAGE 4 OF 6

The University of Nottingham

UNITED KINGDOM · CHINA · MALAYSIA

| | |
|---|---|
| CLIENT: | Lucite |
| LOCATION: | Cassel Works, New Road, Billingham TS23 1LE |
| SERVICE: | Natural Gas Separation |
| PROJECT: | Hydrogen Cyanide and AMS Plant Replacement |
| JOB NO.: | 2022-001 |

The University of Nottingham

UNITED KINGDOM · CHINA · MALAYSIA

# PROCESS DATA SHEET
# VERTICAL VESSEL

| | | | |
|---|---|---|---|
| UNIT NO.: | FC-001 | | |
| ITEM NO.: | FC-001 | NO. REQD.: | 1 |

REV.

## PROCESS SKETCH

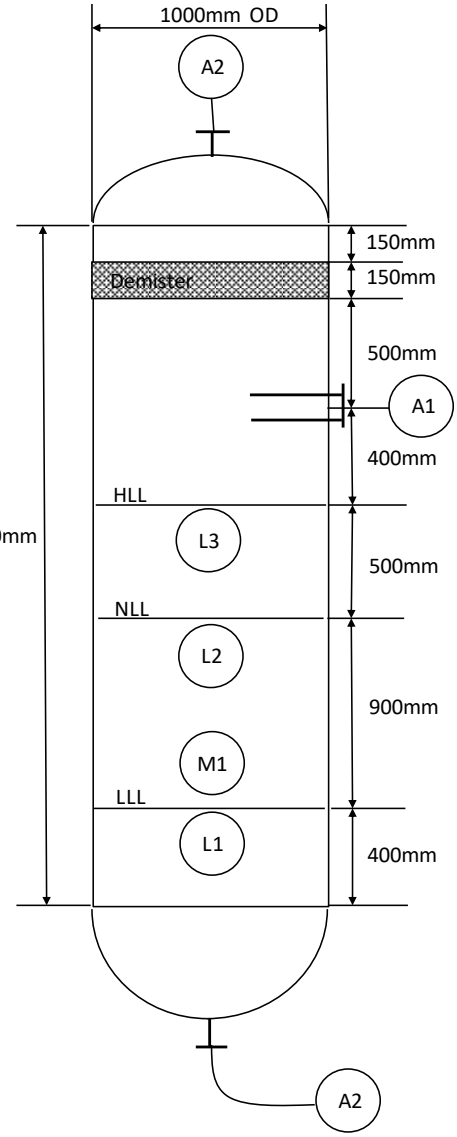


## MECHANICAL DESIGN DATA

| | | | | |
|---|---|---|---|---|
| Design Pressure | | barg | : | 1.5 |
| Vacuum design condition | Press bara : | None | @ Temp °C : | |
| Pressure drop through internals | | bar | : | 0.3 |
| Maximum Design Temperature | | °C | : | 40 |
| Minimum Design Temperature | | °C | : | -160 |
| Minimum Ambient Temperature | | °C | : | -10 |
| Steamout conditions | Press barg : | None | @ Temp °C : | |
| Corrosion Allowance | | mm | : | 1.5 |
| Insulation Type | | | : | C |
| Insulation Thickness | | mm | : | TBA |
| Stress relieved (process reasons) | | | : | No |
| Inside Diameter | | mm | : | 1000 |
| Tan/Tan Length | | mm | : | 3200 |
| Head Type | | | : | Semi-elliptical |
| Total Volume | | m3 | : | 10.5 |

## MATERIALS OF CONSTRUCTION

| | | |
|---|---|---|
| Shell Plate | : | 304 SS |
| Head Plate | : | 304 SS |
| Internals | : | 316 SS |

## CONNECTION DETAILS

| No. | SIZE Inch NB | FLANGE FINISH | FLANGE RATING | SERVICE |
|---|---|---|---|---|
| A1 | 10 | RF | 150# | Natural Gas Inlet |
| A2 | 10 | RF | 150# | Natural Gas Top Outlet |
| A3 | 1/4 | RF | 150# | Natural Gas Bottom Outlet |
| | | | | |
| M1 | 24 | RF | 150# | Man Hole |
| | | | | |
| L1 | 2 | RF | 150# | Level Gauge |
| L2 | 2 | RF | 150# | Level Gauge |
| L3 | 2 | RF | 150# | Level Gauge |

## INTERNALS DETAILS

The nozzle inlet connected with A1 has a diameter of 200mm

The filler in Insulation layer is expanded perlite

## NOTES:

316 SS Wire Mesh Coalescing Demister 150 mm thick

The wall thickness is 9.53 mm

Approximately, at least 751kg of 316 SS is needed

| REV. | DESCRIPTION | DATE | BY | CHECK | APPROVED | DOCUMENT NO. |
|---|---|---|---|---|---|---|
| 1 | Final draft | 4/22/2022 | SJJ | GYA | GYA/CZY | |
| | | | | | | FC-001 |
| | | | | | | |
| | | | | | | SHEET 5 OF 6 |

The University of Nottingham

UNITED KINGDOM · CHINA · MALAYSIA

| | | | |
|---|---|---|---|
| CLIENT: | Lucite | The University of Nottingham<br>UNITED KINGDOM · CHINA · MALAYSIA | **PROCESS DATA SHEET**<br>**VERTICAL VESSEL** |
| LOCATION: | Cassel Works, New Road, Billingham TS23 1LE | | |
| SERVICE: | Natural Gas Separation | | |
| PROJECT: | Hydrogen Cyanide and AMS Plant Replacement | | UNIT NO.: FC-001 |
| JOB NO.: | 2022-001 | | ITEM NO.: FC-001 NO. REQD.: 1 |

REV **PROCESS DATA**

**FLUID DATA**

| | | |
|---|---|---|
| Description | : | Expanded Natural Gas |
| Flammable / Explosive | : | Yes / No |
| Toxic | : | No |
| Corrosive/erosive due to | : | Attack by liquid droplet |

**OPERATING CONDITIONS**

| | | |
|---|---|---|
| Operating Pressure, barg | : | 1.5 |
| Operating Temperature, °C | : | -146 |

**Separator Outlet Streams**

| **Design case** | Units | Maximum | Minimum | Case 3 | Case 4 | Case 5 | Case 6 | Case 7 |
|---|---|---|---|---|---|---|---|---|
| **Top Vapour Data** | | | | | | | | |
| Mass Flow rate | kg/h | 5478 | 627 | | | | | |
| Density | kg/m3 | 2.451 | 2.451 | | | | | |
| Viscosity | cP | TBA | TBA | | | | | |
| Molecular weight | kg/kgmol | 16.63 | 16.63 | | | | | |
| **Bottom Liquid Data** | | | | | | | | |
| Mass Flow rate | kg/h | 683 | 78 | | | | | |
| Density | kg/m3 | 608.7 | 608.7 | | | | | |
| Viscosity | cP | TBA | TBA | | | | | |
| Molecular weight | kg/kgmol | 27.64 | 27.64 | | | | | |

Notes:

This unit is continuously running

| REV. | DESCRIPTION | DATE | BY | CHECK | APPROVED | DOCUMENT NO. |
|---|---|---|---|---|---|---|
| 1 | Final draft | 4/22/2022 | SJJ | GYA | GYA/CZY | FC-001 |
| | | | | | | |
| | | | | | | SHEET 6 OF 6 |

The University of Nottingham

UNITED KINGDOM · CHINA · MALAYSIA

## 1.7 Waste heat boiler WH-001 by Huanyu Chen (20126514)

| | | | |
|---|---|---|---|
| CLIENT: | Lucite | | **CALCULATION SHEET** |
| LOCATION: | Cassel Works, Billingham TS23 1LE | The University of Nottingham | |
| SUBJECT: | Waste heat boiler | | |
| PROJECT: | drogen Cyanide and AMS Plant Replacem | UNITED KINGDOM · CHINA · MALAYSIA | DOCUMENT NO.: WH-001 |
| JOB NO.: | 2022-001 | | EQUIPMENT ITEM NO.: WH-001 |
| Rev. | 1 | | GROUP NO.: Group 6 |

**Objectives:**

To calculate some parameters and the dimentions of waste heat boiler.

**Input Documents:**

| | Document Title | Doc. Number | Rev. | Date |
|---|---|---|---|---|
| 3 | Mechanical data for steam drum | 1 | 1 | 4/12/2022 |
| 3 | Mechanical data for sheel | 2 | 1 | 4/12/2022 |
| 3 | Process data | 3 | 1 | 4/12/2022 |
| 3 | Calculation sheet 1 | 4 | 1 | 4/12/2022 |
| | Calculation sheet 2 | 5 | 1 | 4/12/2022 |
| | Calculation sheet 3 | 6 | 1 | 4/12/2022 |
| | | | | |
| | | | | |

**Assumptions:**

The velocity of product gas velocity is 30m/s

**Summary of Results:**

2

2

| REV. | DESCRIPTION | DATE | BY | CHECK | APPROVED | DOCUMENT NO. |
|---|---|---|---|---|---|---|
| 1 | Check K4 | 4/8/2022 | CHY | GYA | SJJ/GYA | |
| | | | | | | WH-001 |
| | | | | | | |
| | | | | | | PAGE 1 OF 5 |

The University of Nottingham

UNITED KINGDOM · CHINA · MALAYSIA

| | | | |
|---|---|---|---|
| CLIENT: | Lucite | The University of Nottingham<br>UNITED KINGDOM · CHINA · MALAYSIA | **PROCESS DATA SHEET**<br>**STEAM DRUM** |
| LOCATION: | Cassel Works, Billingham TS23 1LE | | |
| SUBJECT: | Waste heat boiler | | |
| PROJECT: | Hydrogen Cyanide and AMS Plant Replacem | | DOCUMENT NO.: WH-001 |
| JOB NO.: | 2022-001 | | EQUIPMENT ITEM NO.: WH-001 |
| GROUP NO.: | 6 | | GROUP NO.: Group 6 |

REV.

**PROCESS SKETCH**

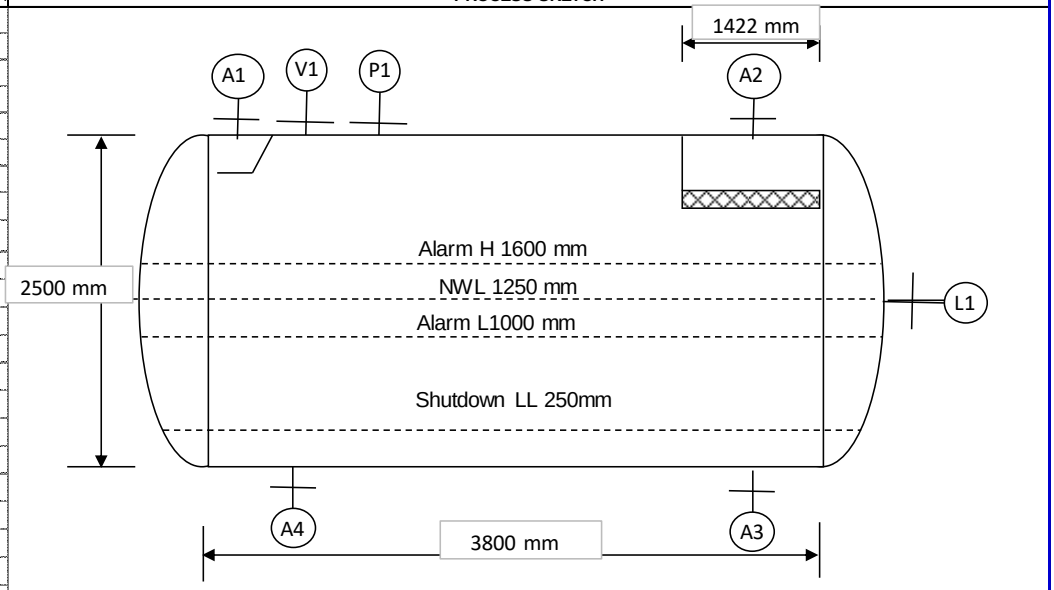


**MECHANICAL DESIGN DATA**

| | | | | | | | | | |
|---|---|---|---|---|---|---|---|---|---|
| Design Pressure | | barg | : | 2.2 | Insulation Type | | | : | H |
| Vacuum design condition | Press bara : | N/A | Temp. °C : | N/A | Insulation Thickness | | mm | : | TBA |
| Pressure drop through internals | | bar | : | 0.10 | Stress relieved (process reasons) | | mm | : | No |
| Maximum Design Temperature | | °C | : | 240 | Inside Diameter | | mm | : | 2500 |
| Minimum Design Temperature | | °C | : | N/A | Tan/Tan Length | | mm | : | 3800 |
| Minimum Ambient Temperature | | °C | : | N/A | Head Type | | | : | Semi-elliptical |
| Steamout conditions | Press barg : | N/A | Temp °C : | N/A | Total Volume | | m3 | : | 21 |
| Corrosion Allowance | | mm | : | 1.5 | | | | | |

**MATERIALS OF CONSTRUCTION**

| | | | |
|---|---|---|---|
| Shell Plate | : 316 SS | Internals | : 316 SS |
| Head Plate | : 316 SS | | |

**NOZZLE CONNECTION SUMMARY**

| No. | SIZE DN | FLANGE FINISH | RATING | SERVICE |
|---|---|---|---|---|
| A1 | 80 | RTJ | 150# | Make-up water inlet |
| A2 | 450 | RTJ | 150# | Steam outlet |
| A3 | 65 | RTJ | 150# | Downcomer to WHB |
| A4 | 25 | RTJ | 150# | Riser from WHB |
| L1 | TBC | RTJ | TBC | Level transmitter |
| V1 | TBC | RTJ | TBC | Pressure relief valve |
| P1 | TBC | RTJ | TBC | Pressure ttransmitter |

**INTERNALS**

The material of steam drum is 316ss due to the high pressure of steam.

**NOTES:**

Number of A3 is 1

There are 5 parallel pipes for transporting steam. Hence, the number of A4 is 5

The University of Nottingham

UNITED KINGDOM · CHINA · MALAYSIA

| | | | | | | | | | | | | | | | | | |
|---|---|---|---|---|---|---|---|---|---|---|---|---|---|---|---|---|---|
| 7 | Rev | Size | 2.2*4.0 m | TEMA Type | AES | (Hor/Vert) | | Horizontal | | Connected in | N/A | Parallel | N/A | Series | | | |
| 8 | | Surf/Unit (Gross/Eff.) | 1170 | m² | Shells/Unit | | | 1 | | Surf/Shell (Gross/Eff.) | | | 1170 | | | m² | |
| 9 | | **PERFORMANCE OF ONE UNIT** | | | | | | **SHELL SIDE** | | | | **TUBE SIDE** | | | | | |
| 10 | | FLUID NAME | | | | | | Water | | | | Product gas | | | | | |
| 11 | | TOTAL FLUID ENTERING | | | | kg/h | | 51480 | | | | 77504 | | | | | |
| 12 | | Vapour | | ( In/Out ) | | | | N/A | 51480 kg/h | | | 77504 kg/h | | | 77504 kg/h | | |
| 13 | | Liquid | | | | | | 51480 kg/h | N/A | | | N/A | | | N/A | | |
| 14 | | Steam | | | | | | N/A | 51480 kg/h | | | N/A | | | N/A | | |
| 15 | | Water | | | | | | 51480 kg/h | N/A | | | N/A | | | N/A | | |
| 16 | | Non-condensibles ? | | | | | | N/A | N/A | | | N/A | | | N/A | | |
| 17 | | FLUID VAPORISED OR CONDENSED | | | | kg/h | | 51480 | | | | 77504 | | | | | |
| 18 | | Temperature | | ( In/Out ) | | °C | | 99.5 | 215 | | | 1300 | | | 210 | | |
| 19 | | Specific Gravity, Liquid | | | | | | 0.9483 | N/A | | | N/A | | | N/A | | |
| 20 | | Viscosity, Liquid | | | | cP | | 0.2805 | N/A | | | N/A | | | N/A | | |
| 21 | | Molecular Weight, Vapour | | | | | | N/A | 18 | | | 24.86 | | | 24.86 | | |
| 22 | | Molecular Weight, Non-condensibles（pres | | | | | | N/A | N/A | | | N/A | | | N/A | | |
| 23 | | Specific Heat | | | | 、 | | 79.12 | 38.86 | | | 1.7 | | | 1.314 | | |
| 24 | | Thermal Conductivity | | | | W/m °C | | 0.6805 | 0.0399 | | | 0.0924 | | | 0.03598 | | |
| 25 | | Latent Heat | | | | J/kg @ °C | | 2278000(@ 99.5°C) | | | | 1887000((@ 220°C) | | | | | |
| 26 | | Inlet Pressure | | | | bara | | 20 | | | | 0.95 | | | | | |
| 27 | | Velocity | | | | m/sec | | 30 | | | | 0.0033 | | | | | |
| 28 | | Pressure Drop, Allowable / Calculated | | | | Pa | | 30000 | / | 0.00019 | | 70000 | / | 253.45 | | | |
| 29 | | Fouling Resistance ( Min. ) | | | | m² °C / W | | 0.002 | | | | 0.004 | | | | | |
| 30 | | Heat Exchanged | | | | W | | 3.49E+07 | MTD ( Corrected ) | | | | | | 426.6 | | |
| 31 | | Heat Transfwer Rate Service / Clean | | | | W/m² °C | | 78 | | | / | 80 | | | | | |
| 32 | | **CONSTRUCTION OF ONE SHELL** | | | | | | | | | | | | | | | |
| 33 | | | | | | | | Shell Side | | | | Tube Side | | | | | |
| 34 | | Design / Test Pressure | | | | barg | | 1.2 | / | 1.8 | | 0.3 | / | 0.45 | | | |
| 35 | | Design Temperature Max. / Min. | | | | °C | | 240 | / | 74.5 | | 1325 | / | 185 | | | |
| 36 | | No. Passes per Shell | | | | | | 1 | | | | 1 | | | | | |
| 37 | | Corrosion Allowance | | | | mm | | 2 | | | | 3 | | | | | |
| 38 | | Connections Size & Rating | In | | | | | 3" | | | | 90" | | | | | |
| 39 | | | Out | | | | | 18" | | | | 64" | | | | | |
| 40 | | | Intermediate | | | | | N/A | | | | N/A | | | | | |
| 41 | | Tube No. | 7500 | OD | 19 | mm; | Thk. (Min/Avg) | 0.719 | mm; | Length | 2620 | mm; | Pitch | 24 | mm | | 60 |
| 42 | | Tube Type | | | Plain | | | | Tube Material | 316 SS | | | Shell Material | | 316 SS | | |
| 43 | | Shell | ID | 2200 | mm | OD | 2250 | mm | Shell Cover | | ( Removable ) | | Material | | 316 SS | | |
| 44 | | Channel or Bonnet | | Channel | | Material | 316 SS | | Channel Cover | | | Yes | Material | | 316 SS | | |
| 45 | | Tubesheet - Stationary | | | | Material | 316 SS | | Tubesheet - Floating | | | No | Material | | 316 SS | | |
| 46 | | Floating Head Cover | | Yes | | Material | 316 SS | | ; | | | Yes | | | | | |
| 47 | | Baffles-Cross | | | | Type | Vertical | | % Cut (Diam/Area) | | 75% | Spacing : c/c (cle | 5 mm | Inlet | By Vendor | mm | |
| 48 | | Baffles - Longditudinal | | | | N/A | | | Seal Type | | | N/A | | | | | |
| 49 | | Supports - Tube | | By Vendor | | U-Bend | | By Vendor | | | | Type | | By Vendor | | | |
| 50 | | Bypass Seal Arrangement | | | | By Vendor | | | Tube-to-Tubesheet Joint | | | By Vendor | | | | | |
| 51 | | Expansion Joint | | | | N/A | | | Type | | | N/A | | | | | |
| 52 | | $\rho V^2$ - Inlet Nozzle | | By Vendor | | Bundle Entrance | | By Vendor | | | | Bundle Exit | | By Vendor | | | |
| 53 | | Gaskets - | Shell Side | | | TBA | | | Tube Side | | | TBA | | | | | |
| 54 | | Floating Head | | | | N/A | | | | | | | | | | | |
| 56 | | Code Requirements | | | | BS EN 13445 | | | | | | TEMA Class | | "B" | | | |
| 57 | | Weight / Shell | Empty : | By Vendor | kg | Filled with Water : | By Vendor | kg | Bundle : | By Vendor | kg | | | | | | |
| 58 | | Remarks : | Vendor to include internal bypass with integral control valve. | | | | | | | | | | | | | | |
| 59 | | | Q indicates special refractory lined inlet | | | | | | | | | | | | | | |

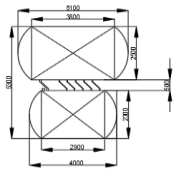

The University of Nottingham

UNITED KINGDOM · CHINA · MALAYSIA

REV **PROCESS DATA**

**FLUID DATA**

| | | | |
|---|---|---|---|
| Description | : | Waste heat boiler to cool dow n the product gas from main reactor R-001 and recovery energy | |
| Flammable / Explosive | : | Yes / | No |
| Toxic | : | | Yes |
| Corrosive/erosive due to | : | HCN/CH4//H2 | |

OPERATING CONDITIONS

| | | | |
|---|---|---|---|
| Operating Pressure | barg | : | 19 |
| Operating Temperature | °C | : | 1300 |

Separator Outlet Streams

| **Design case** | Units | in | out | | | | | |
|---|---|---|---|---|---|---|---|---|
| **Warter** | | | | | | | | |
| Mass Flow rate | kg/h | 51480 | N/A | | | | | |
| Density | kg/m3 | 948.3 | N/A | | | | | |
| Viscosity | cP | 0.2805 | N/A | | | | | |
| Molecular w eight | kg/kgmol | 18.02 | N/A | | | | | |
| **Steam** | | | | | | | | |
| Mass Flow rate | kg/h | N/A | 51480 | | | | | |
| Density | kg/m3 | N/A | 9.779 | | | | | |
| Viscosity | cP | N/A | 0.4003 | | | | | |
| Molecular w eight | kg/kgmol | N/A | 18.02 | | | | | |
| **Product gas** | | | | | | | | |
| Mass Flow rate | kg/h | 77504 | 77504 | | | | | |
| Density | kg/m3 | 0.19 | 0.6195 | | | | | |
| Viscosity | cP | 0.0504 | 0.04627 | | | | | |
| Molecular w eight | kg/kgmol | 23.8 | 23.8 | | | | | |

Notes:

| REACTIONS | | Unit |
|---|---|---|
| Hot fluid (product gas) | | |
| Mass flow rate of hot fluid (product gas) | 77504 | kg/h |
| Aeverage density of hot fluid (product gas) | 0.40475 | kg/m$^3$ |
| Temperature of hot fluid (product gas) $T_{h,i}$ | 1300 | °C |
| Temperature of hot fluid (product gas) $T_{h,o}$ | 210 | °C |
| Aeverage volume flow rate of hot fluid (produduct gas) | 191486.414 | m$^3$/h |
| Velocity of hot fluid (produduct gas) | 30 | m/s |
| Shell tubes | | |
| Out diameter of tubes | 19 | mm |
| Working pressure, high pressure in shell by boiled water | 20 | bar |
| Desigh pressure, $P_d$ | 2.2 | Mpa |
| Material of tubes: 316 SS | 316 SS | N/A |
| Yield stress, σ | 205 | Mpa |
| safety factor, SF | 1.42 | N/A |
| Calculated thickness of tubes, t | 0.13381 | mm |
| Additional thickness for corrosion, $t_{corrosion}$ | 0.5 | mm |
| Thickness of tube | 0.63 | mm |
| Actual tubes: | 3/4' | N/A |
| Actual tubes' inner diameter,$ID_{t,a}$ | 17.6 | mm |
| Actual tubes' thickness,$t_{t,a}$ | 0.719 | mm |
| Number of tubes, $N_t$ | 7500 | N/A |
| | | |
| | | |
| Cold fluid (boiled water) | | |
| Mass flow rate of cold fluid (boiled water) | 51480 | kg/h |
| Temperature of cold fluid (boiled water) in | 99.5 | °C |
| Density of cold fluid (boiled water) in | 948.3 | kg/m$^3$ |
| Volume flow rate of cold fluid (boiled water) | 54.2866182 | m$^3$/h |
| Temperature of cold fluid (steam) | 215 | °C |
| Density of cold fluid (steam) in | 9.779 | kg/m$^3$ |
| Volume flow rate of cold fluid (steam) | 5264.34196 | m$^3$/h |
| Heat transfer | | |
| ΔT1 | 1085.0 | °C |
| ΔT2 | 110.5 | °C |
| LMTD, ΔTm | 426.604026 | °C |
| FT | 1 | N/A |
| MTD | 426.604026 | °C |
| Heat capacity for hot fluid (product gas) at 1300 °C | 1.7 | kJ/(kg °C) |
| Heat capacity for hot fluid (product gas) at 215 °C | 1.314 | kJ/(kg °C) |
| Average heat capacity for hot fluid (product gas) at 210 °C | 1.489 | kJ/(kg °C) |
| Heat transfer to cool down the hot gas, Qc | 1.26E+08 | kJ/h |
| | 3.49E+07 | W |
| Heat coefficient(assumed), U | 70 | W/(m$^2$K) |
| Heat transfer area, A | 1170.093 | m$^2$ |
| Calculated length of tubes, L | 2.61502604 | m |
| Design length of tube, L | 2.62 | m |
| Tan length of shell | 2.9 | m |
| The axial is assumed 1/4 of the diameter | 0.55 | m |
| Length of shell, $L_s$ | 4.000 | m |
| | | |
| Shell | 7500 | |
| Design pitch (Triangular) | 23.75 | mm |
| Pitch (Triangular), $P_T$ | 24 | mm |
| Clearance | 5.0 | mm |
| Shell cross section area | 3741229.74 | mm$^2$ |
| Calculated diameter of shell | 2183.09362 | mm |
| Design diameter | 2.2 | m |
| | | |
| Material of tubes: 316 SS | | |
| Yield stress of the shell | 205 | Mpa |
| Working pressure of shell | 2.2 | Mpa |
| Correction factor, η | 0.9 | N/A |
| Additional thickness for corrosion, $t_{corrosion}$ | 2 | mm |
| Calculated thickness of shell | 16.7629268 | mm |
| Actual thickness of shell | 20.6254743 | mm |
| | 25 | mm |
| | 2233.09362 | mm |
| Out diameter | 2300 | mm |

$$t = \frac{PD}{2\sigma} \times 1.42$$

4. For counter flow:

$$\Delta T_1 = T_{h,\text{in}} - T_{c,\text{out}}$$
$$\Delta T_2 = T_{h,\text{out}} - T_{c,\text{in}}$$

$$\Delta T_{lm} = \frac{\Delta T_1 - \Delta T_2}{\ln(\Delta T_1/\Delta T_2)}$$

$$\dot{Q} = UA_s\,\Delta T_m$$

$$t = \frac{PD}{2\sigma} \times 1.42$$

| REACTIONS | | Unit |
|---|---|---|
| Total steam tubes | | |
| Volume flow rate of cold fluid (produduct gas) | 5264.34196 | $m^3/h$ |
| Number of tube | 1 | N/A |
| Theoretical tubes' inner diameter, $ID_{t,i}$ | 1364.85328 | mm |
| Desigh pressure, $P_d$ | 2.2 | Mpa |
| Material of tubes:316 SS | 316 SS | N/A |
| Yield stress, σ | 205 | Mpa |
| safety factor, SF | 1.42 | NA |
| Thickness of tubes, t | 7.32360296 | mm |
| Additional thickness for corrosion, $t_{corrosion}$ | 0.1 | mm |
| Thickness of tube | 7.42 | mm |
| Actual tubes | DN 1400-XS | N/A |
| Actual tubes' out diameter, $OD_a$ | 1422.4 | mm |
| Actual tubes' inner diameter, $ID_{t,a}$ | 1397 | mm |
| Actual tubes' thickness, $t_{t,a}$ | 12.7 | mm |
| Overall cross area | 1116.584 | $mm^2$ |
| Upcoming tubes, steam | | |
| Overall cross area | 3190.24 | $mm^2$ |
| Number of tubes | 5 | N/A |
| Theoretical tubes' inner diameter, $ID_{t,i}$ | 28.5096475 | mm |
| Desigh pressure, $P_d$ | 2.2 | Mpa |
| Material of tubes: 316 SS | 316 SS | N/A |
| Yield stress, σ | 205 | Mpa |
| safety factor, SF | 1.42 | NA |
| Thickness of tubes, t | 0.11 | mm |
| Additional thickness for corrosion, $t_{corrosion}$ | 0.1 | mm |
| Thickness of tube | 0.21 | mm |
| Actual tubes: DN 100 | DN 25-5 | N/A |
| Actual tubes' out diameter, $OD_a$ | 33.4 | mm |
| Actual tubes' inner diameter, $ID_{t,a}$ | 30.1 | mm |
| Actual tubes' thickness, $t_{t,a}$ | 1.65 | mm |
| Dow ncoming tubes | | |
| Overall cross area | 3190.24 | $mm^2$ |
| Number of tubes | 1 | N/A |
| Theoretical tubes' inner diameter, $ID_{t,i}$ | 63.7495098 | mm |
| Desigh pressure, $P_d$ | 2.2 | Mpa |
| Material of tubes: type 316 (UNS S 31600) | 316 SS | N/A |
| Yield stress, σ | 205 | Mpa |
| safety factor, SF | 1.42 | NA |
| Thickness of tubes, t | 0.24 | mm |
| Additional thickness for corrosion, $t_{corrosion}$ | 0 | mm |
| Thickness of tube | 0.24 | mm |
| Actual tubes: DN 100 | DN 65-5 | N/A |
| Actual tubes' out diameter, $OD_a$ | 73 | mm |
| Actual tubes' inner diameter, $ID_{t,a}$ | 68.78 | mm |
| Actual tubes' thickness, $t_{t,a}$ | 2.11 | mm |
| Steam pocket | | |
| Volume flow rate of cold fluid (boiled w ater) $V_{c,i}$ | 54.2866182 | $m^3/h$ |
| Retention time: 10 mins | 0.16666667 | h |
| Liquid volume | 9.04776969 | $m^3$ |
| Total volume | 18.0955394 | $m^3$ |
| Diameter:length=0.35:1 | 0.65 | N/A |
| Diameter | 2.46531117 | m |
| Lenghth of steam pocket | 3.793 | m |
| Actual diameter of steam pocket | 2.5 | m |
| Design length of steam pocket | 3.80 | m |
| The axial is assumed 1/4 of the diameter | 0.625 | m |
| | | |
| Actual length of steam pocket | 5.05 | m |
| | 5.1 | m |
| Actual total volume | 20.69 | $m^3$ |
| Material of tubes: 316 SS | 316 SS | N/A |
| Yield stress of the pocket, $\sigma_{pocket}$ | 205.00 | Mpa |
| Working pressure of steam pocke, $P_{pocket}$ | 2.20 | Mpa |
| Correction factor, η | 0.90 | N/A |
| Additional thickness for corrosion, $t_{corrosion}$ | 1.5 | mm |
| Calculated thickness of steam pocket, $t_{pocket}$ | 9.84308943 | mm |
| Actual thickness of steam pocket, $t_{pocket}$ | 10 | mm |
| out diameter | 2485.31117 | mm |
| Actual out diameter of steam pocket | 2.5 | m |
| Distance betw een the steam pocket and heat exchanger | 0.5 | m |

$$t = \frac{PD}{2\sigma} \times 1.42$$

## REACTIONS

| | | Unit |
|---|---|---|
| Pressure drop in shell | | |
| Density of water in shell | 948.3 | kg/m³ |
| Viscosity of water in shell, μshell | 0.0002805 | Pa.s |
| Diameter of shell | 2.4 | m |
| Volumflow rate of water in shell | 54.2866182 | m³/h |
| Velocity of water in shell, vshell | 0.00333502 | m/s |
| Reynolds number of water in shell, Reshell | 27059.6561 | N/A |
| Relative roughness, ε | 0.000045 | mm |
| Haaland equation | | |
| 1/f^(1/2) | 6.46419915 | N/A |
| Darcy's factor, f | 0.02393153 | N/A |
| Lenghth | 3.68 | m |
| Pressure drop in shell, ΔPshell | 0.00019 | pa |
| Pressure drop in tube | 3.31 | m |
| Density of product gas in tube | 0.40475 | kg/m³ |
| Viscosity of water in tube | 3.5775E-05 | Pa.s |
| Diameter of tube | 0.0634 | m |
| Velocity of product gas in tube | 30 | m/s |
| Reynolds number of water in shell, Reshell | 21518.7841 | N/A |
| Relative roughness, ε | 0.000045 | mm |
| Haaland equation | | |
| 1/f^(1/2) | 6.12518687 | N/A |
| Darcy's factor, f | 0.02665393 | N/A |
| Lenghth | 3.31 | m |
| Pressure drop in shell, ΔPshell | 253.45 | Pa |
| Product gas connection in | | |
| Mass flow rate of hot fluid (product gas) $F_h$ | 77504 | kg/h |
| Aeverage density of hot fluid (product gas), $\rho_h$ | 0.19 | kg/m³ |
| Aeverage volume flow rate of hot fluid (produduct gas) $V_h$ | 407916.454 | m³/h |
| Velocity of hot fluid (produduct gas) $v_h$ | 30 | m/s |
| Number of tubes, $N_t$ | 1 | N/A |
| Theoretical tubes' inner diameter, $ID_{t,t}$ | 2193.5064 | mm |
| Working pressure, high pressure in shell by boiled water, $P_w$ | 1.3 | bar |
| Desigh pressure, $P_d$ | 0.143 | Mpa |
| Material of tubes: type 316 (UNS S 31600) | 316 SS | N/A |
| Yield stress, σ | 205 | Mpa |
| safety factor, SF | 1.42 | N/A |
| Calculated thickness of tubes, t | 1.08637 | mm |
| Additional thickness for corrosion, $t_{corrosion}$ | 3 | mm |
| Thickness of tube | 4.09 | mm |
| Actual tubes: 87" | 87" | |
| Actual tubes' thickness, $t_{t,a}$ | 9.53 | mm |

$$Re = \rho v d / \mu$$

$$\frac{1}{\sqrt{f}} = -1.8 \log\left[\left(\frac{\varepsilon/D}{3.7}\right)^{1.11} + \frac{6.9}{Re}\right]$$

$$\Delta P = f \times \frac{L}{D} \times \frac{\rho v^2}{2}$$

$$\frac{1}{\sqrt{f}} = -1.8 \log\left[\left(\frac{\varepsilon/D}{3.7}\right)^{1.11} + \frac{6.9}{Re}\right]$$

$$\Delta P = f \times \frac{L}{D} \times \frac{\rho v^2}{2}$$

$$t = \frac{PD}{2\sigma} \times 1.42$$

## REACTIONS

| | | | Unit |
|---|---|---|---|
| 13 | The minimum thickness of DC-001 T | | |
| | The yield stress of 316SS σ | 170 | mpa |
| | The minimum thickness of A-001 T | 0.001 | m |

$$t = \frac{PD}{2\sigma}$$

## 2. Reactor

REV.

**Reactor sketch**

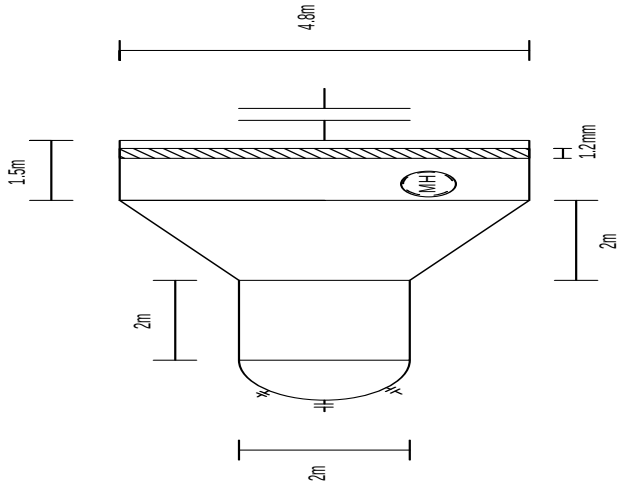


**MECHANICAL DESIGN DATA**

| | | | |
|---|---|---|---|
| Design Pressure | -0.05 barg : | Insulation Type | : |
| Vacuum design condition | Press bara : Temp. °C : | Insulation Thickness | mm : |
| Pressure drop through internals | 0 bar : | Corrosion Allowance | mm : |
| Maximum Design Temperature | 1250 °C : | Stress relieved (process reasons) | : |
| Minimum Design Temperature | N/A °C : | Inside Diameter | mm : |
| Minimum Ambient Temperature | N/A °C : | Tan/Tan Length | mm : |
| Steamout conditions | Press barg : Temp °C : | Total Volume | m3 : |
| Corrosion Allowance | mm : | | |

**MATERIALS OF CONSTRUCTION**

| | |
|---|---|
| Shell Plate : steel 316 | Internals : nternal surface is lined with heat-resistant ceramic shielc |
| Head Plate : steel 316 | |

**NOZZLE CONNECTION SUMMARY**

| No. | SIZE dia. | FLANGE FINISH | RATING barg | SERVICE Celcius |
|---|---|---|---|---|
| 1 | 52" | Stock Finish | 10 | 150 |
| 2 | 20" | Stock Finish | 10 | 150 |
| 3 | 20" | Stock Finish | 10 | 150 |
| 4 | 4.8 meter | Stock Finish | 2 | 1100 |

**INTERNALS**

One 4.8 diameter Distribution Plate 1 meter before catalyst gauze
one distribution plate at the middle of the traopzoid

**NOTES:**

REV **PROCESS DATA**

**FLUID DATA**

| | | |
|---|---|---|
| Description | : | Inlet is a mixture of purified natural gas, ammonia and air. Out let is a mixture of product gas HCN,H2O,H2 at circa 1100 C° |
| Flammable/Explosive | : | Feed mixture is flammable and explosive upon ignition |
| Toxic | : | Outlet product gas consists of highly toxic HCN |
| Corrosive/erosive due to | : | N/A |

OPERATING CONDITIONS

| | | | |
|---|---|---|---|
| Operating Pressure | -0.05 | barg | : |
| Operating Temperature | 1100 | °C | : |

Separator Outlet Streams

| **Design case** | Units | Case 1 | Case2 | Case 3 | Case 4 | Case 5 | Case 6 | Case 7 |
|---|---|---|---|---|---|---|---|---|
| **Vapour Data** | | | | | | | | |
| Mass Flow rate | kg/h | 77504 | | | | | | |
| Density | kg/m3 | | | | | | | |
| Viscosity | cP | | | | | | | |
| Molecular w eight | kg/kgmol | | | | | | | |
| **Light Liquid Data** | | | | | | | | |
| Mass Flow rate | kg/h | | | | | | | |
| Density | kg/m3 | | | | | | | |
| Viscosity | cP | | | | | | | |
| Surface tension | dyne/cm | | | | | | | |
| Molecular w eight | kg/kgmol | | | | | | | |
| **Heavy Liquid Data** | | | | | | | | |
| Mass Flow rate | kg/h | | | | | | | |
| Density | kg/m3 | | | | | | | |
| Viscosity | cP | | | | | | | |
| Surface tension | dyne/cm | | | | | | | |
| Molecular w eight | kg/kgmol | | | | | | | |

Notes

| | | | | | | | | | | |
|---|---|---|---|---|---|---|---|---|---|---|
| Maximum reactor output | XNH3 | 0.0135 | 17.0305 | g/mol | NH3 | 11.6826223 | mol/s | 42057.4402 | mol/h | 716.259236 kg/h |
| | XH2 | 0.0028 | 2.01588 | g/mol | H2 | 2.44341961 | mol/s | 8796.3106 | mol/h | 17.7323066 kg/h |
| | XN2 | 0.5924 | 28.0134 | g/mol | N2 | 512.914407 | mol/s | 1846491.86 | mol/h | 51726.5152 kg/h |
| | XCH4 | 0 | 16.0425 | g/mol | CH4 | 0.00081444 | mol/s | 2.93198137 | mol/h | 0.04703631 kg/h |
| | XHCN | 0.0795 | 27.0253 | g/mol | HCN | 68.8346763 | mol/s | 247804.835 | mol/h | 6697 kg/h |
| | XO2 | 0.0007 | 31.9988 | g/mol | O2 | 0.61551248 | mol/s | 2215.84492 | mol/h | 70.9043784 kg/h |
| | XNO | 0.0003 | 30.0061 | g/mol | NO | 0.3006299 | mol/s | 1082.26762 | mol/h | 32.4746305 kg/h |
| | XH2O | 0.2863 | 18.0153 | g/mol | H2O | 247.876322 | mol/s | 892354.76 | mol/h | 16076.0387 kg/h |
| | XCO | 0.0238 | 28.0101 | g/mol | CO | 20.5680529 | mol/s | 74044.9905 | mol/h | 2074.00759 kg/h |
| | XCO2 | 0.0007 | 44.0095 | g/mol | CO2 | 0.58792335 | mol/s | 2116.52405 | mol/h | 93.1471652 kg/h |

| | | | | | | | | | | |
|---|---|---|---|---|---|---|---|---|---|---|
| Minumum reactor output | XNH3 | 0.0102 | 17.0305 | g/mol | NH3 | 1.14856298 | | 4134.82672 | mol/h | 70.4181665 kg/h |
| | XH2 | 0.0065 | 2.01588 | g/mol | H2 | 0.73818739 | | 2657.47461 | mol/h | 5.35714992 kg/h |
| | XN2 | 0.5928 | 28.0134 | g/mol | N2 | 66.8695362 | | 240730.33 | mol/h | 6743.67503 kg/h |
| | XCH4 | 0 | 16.0425 | g/mol | CH4 | 0 | | 0 | mol/h | 0 kg/h |
| | XHCN | 0.0793 | 27.0253 | g/mol | HCN | 8.94671717 | | 32208.1818 | mol/h | 870.435776 kg/h |
| | XO2 | 0 | 31.9988 | g/mol | O2 | 0 | | 0 | mol/h | 0 kg/h |
| | XNO | 0 | 30.0061 | g/mol | NO | 0.00020361 | | 0.73299534 | mol/h | 0.02199433 kg/h |
| | XH2O | 0.2868 | 18.0153 | g/mol | H2O | 32.3515639 | | 116465.63 | mol/h | 2098.16326 kg/h |
| | XCO | 0.0231 | 28.0101 | g/mol | CO | 2.60885259 | | 9391.86932 | mol/h | 263.067199 kg/h |
| | XCO2 | 0.0012 | 44.0095 | g/mol | CO2 | 0.14089799 | | 507.232777 | mol/h | 22.3230609 kg/h |

C

**Objectives:**

This calculation sheet shows relavant calculations done for the Anddrussow reactor

**Input Documents:**

| Document Title | Doc. Number | Rev. | Date |
|---|---|---|---|
| Modeling Catalytic Gauze Reactors: HCN Synthesis | 1 | | 24th April,2022 |
| | | | |
| | | | |
| | | | |
| | | | |
| | | | |
| | | | |
| | | | |

**Assumptions:**

The reactor can be mass flux limited, so the Hertz–Knudsen equation was used to approximate the as prescribed by the paper in equation (13) as shown by the pic on the bottom.
The basic idea was that, any of the reaction rate caculated at any moment cannot be greater than any of the reactant's adsorption rate.
Although more sophiticated methods could be used, the author said, this method gives a reasonably good approximation as verified by experimental results

Other assumptions were also prescibed by the paper which include:
The superficial velocity of gas moles were assumed to be 500cm/s
The diameter of platinum wires: 0.0025cm
the spacing between wires in the catalyst grid: 0.03cm
Layers of packed catalyst grids are tightly packed togother, so the distance between them assumed to b

For bimolecular reactions the rate expression including the flux limits can only be written as the solution of a quadratic equation. While this could be done, we have chosen to incorporate flux limits of both unimolecular and bimolecular reactions simply as

$$\nu_{ij} r_i \leq \frac{s_i P_j}{\sqrt{2\pi MRT}} \qquad (13)$$

We have written the program to determine rates from the expressions in Table 1; compare this value to flux limits of each reactant, and use the smaller of these rates in Eq. 5. This appears to be a reasonable approximation because the flux limit transforms the rate over a fairly narrow range of temperature and pressure from having Arrhenius temperature dependences and strong pressure dependences to being independent of $T$ and first order in the limiting reactant and zero order in the other reactant.

**Summary of Results:**

catalyst thickness determined to be 1.2mm
Reactor coss sectional area determined to be 18 m^2
Rector diameter: 2.4m
Catalyst weight :60.8 kg

Distribution plate placed before catalyst

Reactor shell thickness:

| | | | |
|---|---|---|---|
| Voidage | $Voidage = 1 - \frac{\pi * \left(\frac{dia}{2}\right)^2 * spacing * 2}{spacing^2 * dia} = 1 - \frac{\pi * \left(\frac{0.0025}{2}\right)^2 * 0.03 * \frac{1}{2} * 4}{0.03^2 * 0.0025} = 0.8691$ | 0.86910031 | |
| 1-voidage | | 0.13089969 | |
| Platinum Price | | 23.41 | £/g |
| molecule speed | | 500 | cm/s |
| Total molar flow rate | | 804 | mol/s |
| Cross sectional area Ac of reactor | $A_C = \frac{\dot{N} * \frac{RT}{P}}{v}$ | 18.0480312 | m^2/s |
| Diameter of reactor | $Dia_R = \sqrt{\frac{A_C}{\pi}}$ | 2.39684517 | m |
| Diameter of platinum w ire | | 0.0025 | cm |
| spacing of platinum w ire | | 0.03 | cm |
| Catalyst thickness l | | 1.2 | mm |
| Catalyst volume V_R | $V_R = A_C * l$ | 21657.6374 | cm^3 |
| Catalyst density \rho | | 21.45 | cm^3 |
| Catalyst Weight | $Weight = V_R * \rho * (1 - voidage)$ | 60.8102805 | kg |
| Catalyst price | $Catalyst\ price = Weight \times Unit\ price \times (1 + processing\ fee\ as\ a\ percentage)$ | 1.5E+06 | £ |
| Number of layers of catalyst grid | $Number\ of\ layers = \frac{Catalyst\ gauze\ thickness}{Thickness\ of\ a\ single\ layer\ of\ catalyst\ net\ (which\ is\ equal\ to\ the\ diameter\ of\ platinum\ wires\ assuming\ tightly\ packed\ nets)}$ | 48 | |

| | | |
|---|---|---|
| Yield stress of the shell | 205 | Mpa |
| Working pressure of shell | 2.2 | Mpa |
| Correction factor, η | 0.9 | N/A |
| Additional thickness for corrosion, $t_{corrosion}$ | 2 | mm |
| Calculated thickness of shell | 0 | mm |
| Actual thickness of shell | 2 | mm |

$$t = \frac{PD}{2\sigma} \times 1.42$$

The University of Nottingham

UNITED KINGDOM · CHINA · MALAYSIA

## 3. Line list

| | | | | |
|---|---|---|---|---|
| CLIENT: | Lucite | | | |
| LOCATION: | Cassel Work,New road, Billingham T | | | |
| PROJECT: | Hydrogen Cyanide and AMS Plant R | | | |
| GROUP NO | Group 6 | | | |
| JOB NO.: | 2022-001 | | | |

The University of Nottingham UNITED KINGDOM · CHINA · MALAYSIA

LINE LIST

SHEET 1 OF 1

DOCUMENT NUMBER 0

| REV | REVISION DESCRIPTION | DATE | BY | CHK | APPR |
|---|---|---|---|---|---|
| 0 | | 4/26/2022 | WYK | CZY | GYA/CZY |

| PIPELINE DESCRIPTION | | | | | | | | OPERATING | | DESIGN | | FIELD TEST | | FLEX | INSULATION AND PAINT | | | | | |
|---|---|---|---|---|---|---|---|---|---|---|---|---|---|---|---|---|---|---|---|---|
| LINE No. | NOM. LINE SIZE (in) | LINE SPEC. | FLUID CODE | FLUID PHASE | FROM | TO | P&ID DRAWING NO. | PRES. (barg) | TEMP. (°C) | PRES. (barg) | TEMP. (°C) | MEDIUM | PRES. (1.5 X D. PRES) (barg) | TEMP. HI / LO (°C) | TEMP. (°C) | PAINT CLASS | INSUL CLASS | INSUL. THK (in) | SPECIAL REQUIREMENTS | ISSUE/ REV |
| 1 | 2 | 3 | 4 | 5 | 6 | 7 | 8 | 9 | 10 | 11 | 12 | 13 | 14 | 15 | 16 | 17 | 18 | 19 | 20 | 21 |
| 001 | 80" | H0AA | AIR | V | Atmosphere | B-001 | AIR-001- 80" -H0AA-PP | 0 | 25 | 0.35 | 50 | Air | 0.5 | By Others | By Others | By Others | PP | By Others | | |
| 002 | 80" | H0AA | AIR | V | B-001 | TV-001 | AIR-002- 80" -H0AA-PP | 22 | 25 | 24.2 | 50 | Air | 36.3 | By Others | By Others | By Others | PP | By Others | | |
| 003 | 64" | H0AA | AIR | V | TV-001 | TV-004 | AIR-003- 64" -H0AA-PP | 22 | 25 | 24.2 | 50 | Air | 36.3 | By Others | By Others | By Others | PP | By Others | | |
| 004 | 56" | H0AA | AIR | V | TV-004 | TV-005 | AIR-004- 56" -H0AA-PP | 22 | 25 | 24.2 | 50 | Air | 36.3 | By Others | By Others | By Others | PP | By Others | | |
| 005 | 28" | H0AA | AIR | V | TV-005 | F-001 | AIR-005- 28" -H0AA-PP | 22 | 25 | 24.2 | 50 | Air | 36.3 | By Others | By Others | By Others | PP | By Others | | |
| 006 | 48" | H0AA | AIR | V | TV-005 | TEE-001 | AIR-006- 48" -H0AA-PP | 22 | 25 | 24.2 | 50 | Air | 36.3 | By Others | By Others | By Others | PP | By Others | | |
| 007 | 40" | H0AA | AIR | V | F-001 | TEE-001 | AIR-007- 40" -H0AA-H | 22 | 700 | 24.2 | 725 | Air | 36.3 | By Others | By Others | By Others | H | By Others | | |
| 008 | 52" | H1AA | AIR | V | TEE-001 | R-001 | AIR-008- 52" -H0AA-H | 22 | 200 | 24.2 | 225 | Air | 36.3 | By Others | By Others | By Others | H | By Others | | |
| 009 | 3" | C1PH | NG | L | Supplier | HE-001 | NG-009- 3" -C1PH-PP | 51 | 25 | 24.2 | 50 | Air | 36.3 | By Others | By Others | By Others | PP | By Others | | |
| 010 | 2 1/2" | C1PH | NG | V | HE-001 | TB-001 | NG-010- 2 1/2" -C1PH-C | 50.3 | -42 | 24.2 | -17 | Air | 36.3 | By Others | By Others | By Others | C | By Others | | |
| 011 | 10" | A1PH | NG | L&V | TB-001 | FC-001 | NG-011- 10" -A1PH-C | 0.5 | -146 | 0.9 | -121 | Air | 1.3 | By Others | By Others | By Others | C | By Others | | |
| 012 | 10" | A1PH | NG | V | FC-001 | HE-001 | NG-012- 10" -A1PH-C | 0.5 | -146 | 0.9 | -121 | Air | 1.3 | By Others | By Others | By Others | C | By Others | | |
| 013 | 12" | A1PH | NG | V | HE-001 | HE-002 | NG-013- 12" -A1PH-C | 0.5 | -47 | 0.9 | -22 | Air | 1.3 | By Others | By Others | By Others | C | By Others | | |
| 014 | 14" | A1PH | NG | V | HE-002 | TV-006 | NG-014- 14" -A1PH-PP | 0.5 | 0 | 0.9 | 25 | Air | 1.3 | By Others | By Others | By Others | PP | By Others | | |
| 015 | 8" | A1PH | NG | V | TV-006 | F-001 | NG-015- 8" -A1PH-PP | 0.5 | 0 | 0.9 | 25 | Air | 1.3 | By Others | By Others | By Others | PP | By Others | | |
| 016 | 12" | A1PH | NG | V | TV-006 | TEE-003 | NG-016- 12" -A1PH-PP | 0.5 | 0 | 0.9 | 25 | Air | 1.3 | By Others | By Others | By Others | PP | By Others | | |
| 017 | 14" | A1PH | NG | V | F-001 | TEE-003 | NG-017- 14" -A1PH-H | 0 | 700 | 0.9 | 725 | Air | 1.3 | By Others | By Others | By Others | H | By Others | | |
| 018 | 20" | A1PH | NG | V | TEE-003 | R-001 | NG-018- 20" -A1PH-H | 0 | 700 | 0.9 | 725 | Air | 1.3 | By Others | By Others | By Others | H | By Others | | |
| 019 | 1 1/4" | H0LD | NH | L | Supplier | EV-001 | NH-019- 1 1/4" -H0LD-PP | 19 | 25 | 20.9 | 50 | Water | 31.4 | By Others | By Others | By Others | PP | By Others | | |
| 020 | 1 1/4" | H0LD | NH | L | EV-001 | BL-001 | NH-020- 1 1/4" -H0LD-C | 1.5 | -25 | 1.85 | 0 | Air | 2.8 | By Others | By Others | By Others | C | By Others | | |
| 021 | 16" | H0LD | NH | V | BL-001 | TV-009 | NH-021- 16" -H0LD-PP | 0 | 0 | 0.35 | 25 | Air | 0.5 | By Others | By Others | By Others | PP | By Others | | |
| 022 | 16" | H0LD | NH | V | TV-009 | TV-007 | NH-022- 16" -H0LD-PP | 0 | 0 | 0.35 | 25 | Air | 0.5 | By Others | By Others | By Others | PP | By Others | | |
| 023 | 14" | H0LD | NH | V | TV-007 | TEE-002 | NH-023- 14" -H0LD-PP | 0 | 0 | 0.35 | 25 | Air | 0.5 | By Others | By Others | By Others | PP | By Others | | |
| 024 | 8" | H0LD | NH | V | TV-007 | F-001 | NH-024- 8" -H0LD-PP | 0 | 0 | 0.35 | 25 | Air | 0.5 | By Others | By Others | By Others | PP | By Others | | |
| 025 | 14" | H0LD | NH | V | F-001 | TEE-002 | NH-025- 14" -H0LD-H | 0 | 700 | 0.35 | 725 | Air | 0.5 | By Others | By Others | By Others | H | By Others | | |
| 026 | 20" | H0LD | NH | V | TEE-002 | R-001 | NH-026- 20" -H0LD-H | 0 | 700 | 0.35 | 725 | Air | 0.5 | By Others | By Others | By Others | H | By Others | | |
| 027 | 64" | H3PB | PRO | V | R-001 | HE-003-A | PRO-027- 64" -H3PB-PP | -0.05 | 210 | 0.3 | 235 | Air | 0.5 | By Others | By Others | By Others | PP | By Others | | |
| 028 | 38" | H3PB | PRO | V | HE-003-A | A-001 | PRO-028- 38" -H3PB-PP | -0.75 | 80 | -0.4 | 105 | Air | -0.6 | By Others | By Others | By Others | PP | By Others | | |
| 029 | 48" | H3PB | PRO | V | A-001 | HE-006-A | PRO-029- 48" -H2PB-PP | -1.25 | 75 | -0.9 | 100 | Air | 0.4 | By Others | By Others | By Others | PP | By Others | | |
| 030 | 48" | H3PB | PRO | V | HE-006-A | A-002 | PRO-030- 48" -H2PB-C | -1.95 | 20 | -1.6 | 57 | Air | -2.4 | By Others | By Others | By Others | C | By Others | | |
| 031 | 2" | A1PB | PRO | L | A-002 | DP-011 | PRO-031- 2" -A1PB-PP | 0 | 46.34 | 0.35 | 60 | Water | 0.5 | By Others | By Others | By Others | PP | By Others | | |
| 032 | 2" | A1PB | PRO | L | DP-011 | HE-007-A | PRO-032- 2" -A1PB-PP | 0.7 | 46.34 | 1.05 | 60 | Water | 1.6 | By Others | By Others | By Others | PP | By Others | | |
| 033 | 2" | A1PB | PRO | L | HE-007-A | DC-001 | PRO-033- 2" -A1PB-PP | 0 | 55 | 0.35 | 60 | Water | 0.5 | By Others | By Others | By Others | PP | By Others | | |
| 034 | 28" | H1PB | HCN | V | DC-001 | C-001 | HCN-034- 28" -H1PB-PP | 0 | 50 | 0.35 | 75 | Air | 0.5 | By Others | By Others | By Others | PP | By Others | | |
| 035 | 2 1/2" | A1PB | HCN | L | C-001 | V-002 | HCN-035- 2 1/2" -A1PB-PP | 0 | 28.18 | 0.35 | 53 | Air | 0.5 | By Others | By Others | By Others | PP | By Others | | |
| 036 | 2 1/2" | A1PB | HCN | L | V-002 | P-025 | HCN-036- 2 1/2" -A1PB-PP | 0 | 25.69 | 0.35 | 51 | Air | 0.5 | By Others | By Others | By Others | PP | By Others | | |
| 037 | 2 1/2" | A1PB | HCN | L | P-025 | TV-028 | HCN-037- 2 1/2" -A1PB-PP | 0.7 | 25.69 | 1.05 | 51 | Air | 1.6 | By Others | By Others | By Others | PP | By Others | | |
| 038 | 1 1/4" | A1PB | HCN | L | TV-028 | HE-006-B | HCN-038- 1 1/4" -A1PB-PP | 0.7 | 25.69 | 1.05 | 51 | Air | 1.6 | By Others | By Others | By Others | PP | By Others | | |
| 039 | 1 1/4" | A1PB | HCN | L | HE-006-B | Billingham Beck | HCN-039- 1 1/4" -A1PB-PP | 0 | 5 | 0.35 | 30 | Air | 0.5 | By Others | By Others | By Others | PP | By Others | | |
| 040 | 8" | A0JW | C | L | TV-003 | P-003 | C-040- 8" -A0JW-PP | 0.5 | 24.47 | 0.85 | 49 | Water | 1.3 | By Others | By Others | By Others | PP | By Others | | |
| 041 | 8" | A0JW | C | L | HE-003-B | FV-001 | C-041- 8" -A0JW-PP | 0.4 | 24.47 | 0.75 | 49 | Water | 1.1 | By Others | By Others | By Others | PP | By Others | | |
| 042 | 2 1/2" | A0JW | C | L | FV-001 | HE-002 | C-042- 2 1/2" -A0JW-PP | 0.4 | 24.47 | 0.75 | 49 | Water | 1.1 | By Others | By Others | By Others | PP | By Others | | |
| 043 | 2 1/2" | A0JW | C | L | HE-002 | TV-008 | C-043- 2 1/2" -A0JW-PP | 0 | 17.35 | 0.35 | 42 | Water | 0.5 | By Others | By Others | By Others | PP | By Others | | |
| 044 | 8" | A0JW | C | L | TV-008 | CM-001 | C-044- 8" -A0JW-PP | 0 | 24.47 | 0.35 | 49 | Water | 0.5 | By Others | By Others | By Others | PP | By Others | | |
| 045 | 12" | C0JW | C | L | CM-001 | AC-001 | C-045- 12" -C0JW-PP | 14 | 77 | 15.4 | 102 | Water | 23.1 | By Others | By Others | By Others | PP | By Others | | |
| 046 | 10" | A0JW | C | L | AC-001 | EV-002 | C-046- 10" -A0JW-PP | 14 | 30 | 15.4 | 55 | Water | 23.1 | By Others | By Others | By Others | PP | By Others | | |
| 047 | 8" | A0JR | C | L | EV-002 | TV-021 | C-047- 8" -A0JR-C | 1 | -20 | 1.35 | 5 | Water | 2.0 | By Others | By Others | By Others | C | By Others | | |
| 048 | 8" | A0JW | C | L | FV-001 | BL-001 | C-048- 8" -A0JW-PP | 0.5 | 24.47 | 0.85 | 49 | Water | 1.3 | By Others | By Others | By Others | PP | By Others | | |
| 049 | 8" | A0JW | C | L | BL-001 | TV-008 | C-049- 8" -A0JW-PP | 0.5 | 17.35 | 0.85 | 42 | Water | 1.3 | By Others | By Others | By Others | PP | By Others | | |
| 050 | 5" | A0JW | C | L | Supplier | MT-001 | C-050- 5" -A0JW-PP | 0.5 | 24.47 | 0.85 | 49 | Water | 1.3 | By Others | By Others | By Others | PP | By Others | | |
| 051 | 8" | A0JW | C | L | MT-001 | P-001 | C-051- 8" -A0JW-PP | 0 | 24.47 | 0.35 | 49 | Water | 0.5 | By Others | By Others | By Others | PP | By Others | | |
| 052 | 8" | A0JW | C | L | P-001 | FV-001 | C-052- 8" -A0JW-PP | 1 | 24.47 | 1.35 | 49 | Water | 2.0 | By Others | By Others | By Others | PP | By Others | | |
| 053 | 8" | A1AW | CW | L | Supplier | MT-001 | CW-053- 8" -A1AW-PP | 1.5 | 700 | 1.85 | 725 | Water | 2.8 | By Others | By Others | By Others | PP | By Others | | |
| 054 | 40" | H1JA | WG | V | TV-027 | B-004 | WG-054- 40" -H1JA-PP | -0.6 | 37.96 | -0.25 | 63 | Air | -0.4 | By Others | By Others | By Others | PP | By Others | | |
| 055 | 1 1/4" | A1AS | BW | L | TV-002 | F-001 | BW-055- 1 1/4" -A1AS-H | 0 | 99.5 | 0.35 | 125 | Air | 0.5 | By Others | By Others | By Others | H | By Others | | |
| 056 | 2 1/2" | A1AS | BW | L | TV-002 | F-001 | BW-056- 2 1/2" -A1AS-H | 0 | 99.5 | 0.35 | 125 | Air | 0.5 | By Others | By Others | By Others | H | By Others | | |
| 057 | 14" | A2AS | ST | V | F-001 | ED-001 | ST-057- 14" -A2AS-H | 4 | 151.8 | 4.4 | 177 | Air | 6.6 | By Others | By Others | By Others | H | By Others | | |
| 058 | 14" | A2AS | ST | V | F-001 | TV-030 | ST-058- 14" -A2AS-H | 19 | 210 | 20.9 | 235 | Air | 31.4 | By Others | By Others | By Others | H | By Others | | |
| 059 | 56" | H0AA | AIR | V | TV-001 | TV-010 | AIR-059- 56" -H0AA-PP | 22 | 25 | 24.2 | 50 | Air | 36.3 | By Others | By Others | By Others | PP | By Others | | |
| 060 | 52" | H0AA | AIR | V | TV-010 | B-003 | AIR-060- 52" -H0AA-PP | 0 | 25 | 0.35 | 50 | Air | 0.5 | By Others | By Others | By Others | PP | By Others | | |
| 061 | 52" | H0AA | AIR | V | B-003 | AC-001 | AIR-061- 52" -H0AA-PP | 17 | 25 | 18.7 | 50 | Air | 28.1 | By Others | By Others | By Others | PP | By Others | | |
| 062 | 52" | H0AA | AIR | V | AC-001 | Atmosphere | AIR-062- 52" -H0AA-PP | 17 | 31 | 18.7 | 56 | Air | 28.1 | By Others | By Others | By Others | PP | By Others | | |
| 063 | 32" | A0AA | TG | V | F-001 | FN-001 | TG-063- 32" -A0AA-PP | -0.5 | 153 | -0.15 | 178 | Air | -0.2 | By Others | By Others | By Others | PP | By Others | | |
| 064 | 30" | A0AA | TG | V | FN-001 | CN-001 | TG-064- 30" -A0AA-PP | 0 | 153 | 0.35 | 178 | Air | 0.5 | By Others | By Others | By Others | PP | By Others | | |
| 065 | 30" | A0AA | TG | V | CN-001 | Atmosphere | TG-065- 30" -A0AA-PP | 0 | 120 | 0.35 | 145 | Air | 0.5 | By Others | By Others | By Others | PP | By Others | | |
| 066 | 1/4" | A1PR | NG | L | FC-001 | HE-003-B | NG-066- 1/4" -A1PR-C | 0.5 | -146 | 0.85 | -121 | Water | 1.3 | By Others | By Others | By Others | C | By Others | | |
| 067 | 1/2" | A1PH | NG | V | HE-003-B | F-001 | NG-067- 1/2" -A1PH-PP | 0 | 0 | 0.35 | 25 | Air | 0.5 | By Others | By Others | By Others | PP | By Others | | |
| 068 | 32" | H0AA | AIR | V | TV-010 | B-006 | AIR-068- 32" -H0AA-PP | 0 | 25 | 0.35 | 50 | Air | 0.5 | By Others | By Others | By Others | PP | By Others | | |
| 069 | 1 1/4" | H0LD | NH | V | TV-009 | MT-002 | NH-069- 1 1/4" -H0LD-PP | 0.5 | 0 | 0.85 | 25 | Air | 1.3 | By Others | By Others | By Others | PP | By Others | | |
| 070 | 26" | H0AA | AIR | V | FCV-006 | F-001 | AIR-070- 26" -H0AA-PP | 0 | 25 | 0.35 | 50 | Air | 0.5 | By Others | By Others | By Others | PP | By Others | | |

| | | | | | | | | | | | | | | | | | | | | |
|---|---|---|---|---|---|---|---|---|---|---|---|---|---|---|---|---|---|---|---|---|
| 071 | 4" | A0AW | PW | L | Water Supplier | P-005 | PW-071- 4" -A0AW-PP | 0 | 5 | 0.35 | 25 | Water | 0.5 | By Others | By Others | By Others | PP | By Others | | |
| 072 | 4" | A0AW | PW | L | P-005 | WT-001 | PW-072- 4" -A0AW-PP | 1.5 | 5 | 1.85 | 30 | Water | 2.8 | By Others | By Others | By Others | PP | By Others | | |
| 073 | 4" | A0AW | PW | L | WT-001 | T-001 | PW-073- 4" -A0AW-PP | 0 | 5 | 0.35 | 30 | Water | 0.5 | By Others | By Others | By Others | PP | By Others | | |
| 074 | 4" | A1AS | PW | L | T-001 | P-007 | PW-074- 4" -A1AS-PP | 0 | 5 | 0.35 | 30 | Water | 0.5 | By Others | By Others | By Others | PP | By Others | | |
| 075 | 4" | A1AS | PW | L | P-007 | ED-001 | PW-075- 4" -A1AS-PP | 1.5 | 5 | 1.85 | 30 | Water | 2.8 | By Others | By Others | By Others | PP | By Others | | |
| 076 | 14" | A2AS | ST | V | Supplier | ED-001 | ST-076- 14" -A2AS-H | 4 | 151.8 | 4.35 | 177 | Air | 6.5 | By Others | By Others | By Others | H | By Others | | |
| 077 | 2" | A1AS | CS | L | TV-015 | ED-001 | CS-077- 2" -A1AS-PP | 0 | 99 | 0.35 | 124 | Air | 0.5 | By Others | By Others | By Others | PP | By Others | | |
| 078 | 6" | A1AS | PW | L | ED-001 | P-011 | PW-078- 6" -A1AS-PP | 0 | 99.5 | 0.35 | 125 | Water | 0.5 | By Others | By Others | By Others | PP | By Others | | |
| 079 | 6" | A1AS | PW | L | P-011 | TV-014 | PW-079- 6" -A1AS-PP | 0.2 | 99.5 | 0.55 | 125 | Water | 0.8 | By Others | By Others | By Others | PP | By Others | | |
| 080 | 3/8" | A2PD | SH | L | Supplier | P-009 | SH-080- 3/8" -A2PD-PP | 0 | 25 | 0.35 | 50 | Water | 0.5 | By Others | By Others | By Others | PP | By Others | | |
| 081 | 3/8" | A2PD | SH | L | P-009 | TV-011 | SH-081- 3/8" -A2PD-PP | 5.7 | 25 | 6.3 | 50 | Water | 9.4 | By Others | By Others | By Others | PP | By Others | | |
| 082 | 3/8" | A2PD | SH | L | TV-011 | Water Treatment Plant | SH-082- 3/8" -A2PD-PP | 0 | 25 | 0.35 | 50 | Water | 0.5 | By Others | By Others | By Others | PP | By Others | | |
| 083 | 3/8" | A2PB | HCL | L | Supplier | P-010 | HCL-083- 3/8" -A2PB-PP | 0 | 25 | 0.35 | 50 | Water | 0.5 | By Others | By Others | By Others | PP | By Others | | |
| 084 | 3/8" | A2PB | HCL | L | P-10 | TV-012 | HCL-084- 3/8" -A2PB-PP | 5.7 | 25 | 6.3 | 50 | Water | 9.4 | By Others | By Others | By Others | PP | By Others | | |
| 085 | 3/8" | A2PB | HCL | L | TV-012 | Water Treatment Plant | HCL-085- 3/8" -A2PB-PP | 0 | 25 | 0.35 | 50 | Water | 0.5 | By Others | By Others | By Others | PP | By Others | | |
| 086 | 1/8" | A2PB | HCL | L | TV-012 | TV-013 | HCL-086- 1/8" -A2PB-PP | 0 | 25 | 0.35 | 50 | Water | 0.5 | By Others | By Others | By Others | PP | By Others | | |
| 087 | 1/8" | A2PD | SH | L | TV-011 | TV-013 | SH-087- 1/8" -A2PD-PP | 0 | 25 | 0.35 | 50 | Water | 0.5 | By Others | By Others | By Others | PP | By Others | | |
| 088 | 1/8" | A2PD | WS | L | TV-013 | Water Treatment Plant | WS-088- 1/8" -A2PD-PP | 0 | 25 | 0.35 | 50 | Water | 0.5 | By Others | By Others | By Others | PP | By Others | | |
| 089 | 3" | A1AS | BW | L | TV-014 | TV-002 | BW-089- 3" -A1AS-PP | 0 | 99.5 | 0.35 | 125 | Air | 0.5 | By Others | By Others | By Others | PP | By Others | | |
| 090 | 3" | A1AS | BW | L | TV-014 | WH-001 | BW-090- 3" -A1AS-PP | 0 | 210 | 0.35 | 235 | Water | 0.5 | By Others | By Others | By Others | PP | By Others | | |
| 091 | 18" | A2AS | ST | V | WH-001 | Industrial Plant | ST-091- 18" -A2AS-H | 19 | 210 | 20.9 | 235 | Air | 31.4 | By Others | By Others | By Others | H | By Others | | |
| 092 | 10" | A1AW | CW | L | Supplier | P-013 | CW-092- 10" -A1AW-C | 0 | 25 | 0.35 | 50 | Water | 0.5 | By Others | By Others | By Others | C | By Others | | |
| 093 | 8" | A1AW | CW | L | TV-016 | R-001 | CW-093- 8" -A1AW-C | 0 | 25 | 0.35 | 50 | Water | 0.5 | By Others | By Others | By Others | C | By Others | | |
| 094 | 1/8" | H0AA | OX | V | ED-001 | Atmosphere | OX-094- 1/8" -H0AA-C | 0 | 99.5 | 0.35 | 125 | Air | 0.5 | By Others | By Others | By Others | C | By Others | | |
| 095 | 6" | A1AW | CW | L | TV-016 | P-021-A | CW-095- 6" -A1AW-C | 0.6 | 25 | 0.95 | 50 | Water | 1.4 | By Others | By Others | By Others | C | By Others | | |
| 096 | 2 1/2" | A0AW | PW | L | T-001 | P-015 | PW-096- 2 1/2" -A0AW-PP | 0 | 99 | 0.35 | 124 | Water | 0.5 | By Others | By Others | By Others | PP | By Others | | |
| 097 | 1 1/2" | A0AW | PW | L | P-015 | TV-017 | PW-097- 1 1/2" -A0AW-PP | 0.26 | 5 | 0.61 | 30 | Water | 0.9 | By Others | By Others | By Others | PP | By Others | | |
| 098 | 1 1/2" | A0AW | PW | L | TV-017 | M-001 | PW-098- 1 1/2" -A0AW-PP | 0 | 5 | 0.35 | 30 | Water | 0.5 | By Others | By Others | By Others | PP | By Others | | |
| 099 | 1 1/2" | A0AW | PW | L | TV-017 | P-017 | PW-099- 1 1/2" -A0AW-PP | 0.26 | 5 | 0.61 | 30 | Water | 0.9 | By Others | By Others | By Others | PP | By Others | | |
| 100 | 1 1/2" | A0AW | PW | L | P-017 | BE-001 | PW-100- 1 1/2" -A0AW-PP | 0.7 | 5 | 1.05 | 30 | Water | 1.6 | By Others | By Others | By Others | PP | By Others | | |
| 101 | 1/2" | A3PB | SA | L | SAR PLANT | DP-001 | SA-101- 1/2" -A3PB-PP | 0 | 25 | 0.35 | 50 | Water | 0.5 | By Others | By Others | By Others | PP | By Others | | |
| 102 | 1/2" | A3PB | SA | L | DP-001 | BE-001 | SA-102- 1/2" -A3PB-PP | 0.7 | 25 | 1.05 | 50 | Water | 1.6 | By Others | By Others | By Others | PP | By Others | | |
| 103 | 1 1/2" | A2PB | SA | L | BE-001 | DP-003 | SA-103- 1 1/2" -A2PB-PP | 0 | 30 | 0.35 | 55 | Water | 0.5 | By Others | By Others | By Others | PP | By Others | | |
| 104 | 1 1/2" | A2PB | SA | L | DP-003 | A-001 | SA-104- 1 1/2" -A2PB-PP | 0.7 | 30 | 1.05 | 55 | Water | 1.6 | By Others | By Others | By Others | PP | By Others | | |
| 105 | 5" | A2PB | SA | L | BE-001 | DP-005-A | SA-105- 5" -A2PB-PP | 0 | 30 | 0.35 | 55 | Water | 0.5 | By Others | By Others | By Others | PP | By Others | | |
| 106 | 5" | A2PB | SA | L | DP-005-A | HE-005-B | SA-106- 5" -A2PB-PP | 0.7 | 30 | 1.05 | 55 | Water | 1.6 | By Others | By Others | By Others | PP | By Others | | |
| 107 | 5" | A2PB | SA | L | HE-005-B | BE-001 | SA-107- 5" -A2PB-C | 0 | 28 | 0.35 | 53 | Water | 0.5 | By Others | By Others | By Others | C | By Others | | |
| 108 | 10" | A1AW | CW | L | TV-016 | P-021-A | CW-108- 10" -A1AW-C | 0 | 25 | 0.35 | 50 | Water | 0.5 | By Others | By Others | By Others | C | By Others | | |
| 109 | 10" | A1AW | CW | L | P-021-A | TV-018 | CW-109- 10" -A1AW-C | 0.07 | 25 | 0.42 | 50 | Water | 0.6 | By Others | By Others | By Others | C | By Others | | |
| 110 | 10" | A1AW | CW | L | TV-018 | TV-019 | CW-110- 10" -A1AW-C | 0.07 | 25 | 0.42 | 50 | Water | 0.6 | By Others | By Others | By Others | C | By Others | | |
| 111 | 5" | A1AW | CW | V | TV-019 | P-021-B | CW-111- 5" -A1AW-C | 0 | 25 | 0.35 | 50 | Water | 0.5 | By Others | By Others | By Others | C | By Others | | |
| 112 | 5" | A1AW | CW | V | P-021-B | HE-005-B | CW-112- 5" -A1AW-C | 0.07 | 25 | 0.42 | 50 | Water | 0.6 | By Others | By Others | By Others | C | By Others | | |
| 113 | 5" | A1AW | CW | V | HE-005-B | TV-024 | CW-113- 5" -A1AW-PP | 0.05 | 35 | 0.4 | 60 | Water | 0.6 | By Others | By Others | By Others | PP | By Others | | |
| 114 | 3/4" | A1AW | CW | L | TV-018 | HE-005-A | CW-114- 3/4" -A1AW-C | 0.07 | 25 | 0.42 | 50 | Water | 0.6 | By Others | By Others | By Others | C | By Others | | |
| 115 | 3/4" | A1AW | CW | L | HE-005-A | TV-023 | CW-115- 3/4" -A1AW-PP | 0 | 70 | 0.35 | 95 | Water | 0.5 | By Others | By Others | By Others | PP | By Others | | |
| 116 | 8" | A1AW | CW | L | TV-023 | TV-024 | CW-116- 8" -A1AW-PP | 0.01 | 32 | 0.36 | 57 | Water | 0.5 | By Others | By Others | By Others | PP | By Others | | |
| 117 | 8" | A1AW | CW | L | TV-019 | HE-004 | CW-117- 8" -A1AW-C | 0.02 | 25 | 0.37 | 50 | Water | 0.6 | By Others | By Others | By Others | C | By Others | | |
| 118 | 8" | A1AW | CW | L | HE-004 | TV-023 | CW-118- 8" -A1AW-PP | 0.01 | 31.5 | 0.36 | 57 | Water | 0.5 | By Others | By Others | By Others | PP | By Others | | |
| 119 | 10" | A1AW | CW | L | TV-024 | Billingham Beck | CW-119- 10" -A1AW-PP | 0 | 31 | 0.35 | 56 | Water | 0.5 | By Others | By Others | By Others | PP | By Others | | |
| 120 | 4" | A0JR | C | L | TV-021 | HE-003-A | C-120- 4" -A0JR-C | 1 | -20 | 1.35 | 5 | Air | 2.0 | By Others | By Others | By Others | C | By Others | | |
| 121 | 4" | A0JW | C | L | HE-003-A | TV-022 | C-121- 4" -A0JW-PP | 0 | 40 | 0.35 | 65 | Water | 0.5 | By Others | By Others | By Others | PP | By Others | | |
| 122 | 5" | A0JW | C | L | TV-022 | P-019 | C-122- 5" -A0JW-PP | 0 | 35 | 0.35 | 60 | Water | 0.5 | By Others | By Others | By Others | PP | By Others | | |
| 123 | 5" | A0JW | C | L | P-019 | TV-003 | C-123- 5" -A0JW-PP | 0.007 | 35 | 0.357 | 60 | Water | 0.5 | By Others | By Others | By Others | PP | By Others | | |
| 124 | 8" | A0JR | C | L | TV-021 | TV-020 | C-124- 8" -A0JR-C | 1 | -20 | 1.35 | 5 | Water | 2.0 | By Others | By Others | By Others | C | By Others | | |
| 125 | 2" | A0JR | C | L | TV-020 | HE-006-A | C-125- 2" -A0JR-C | 1 | -20 | 1.35 | 5 | Water | 2.0 | By Others | By Others | By Others | C | By Others | | |
| 126 | 2" | A0JW | C | L | HE-006-A | TV-022 | C-126- 2" -A0JW-PP | 0 | 20 | 0.35 | 45 | Water | 0.5 | By Others | By Others | By Others | PP | By Others | | |
| 127 | 8" | A0JR | C | L | TV-020 | P-039 | C-127- 8" -A0JR-C | 0 | -20 | 0.35 | 5 | Water | 0.5 | By Others | By Others | By Others | C | By Others | | |
| 128 | 5" | A2PB | AMS | L | A-001 | DP-005-B | AMS-128- 5" -A2PB-PP | 0 | 77 | 0.35 | 102 | Water | 0.5 | By Others | By Others | By Others | PP | By Others | | |
| 129 | 5" | A2PB | AMS | L | DP-005-B | HE-005-A | AMS-129- 5" -A2PB-PP | 0.7 | 77 | 1.05 | 102 | Water | 1.6 | By Others | By Others | By Others | PP | By Others | | |
| 130 | 5" | A2PB | AMS | L | HE-005-A | A-001 | AMS-130- 5" -A2PB-C | 0.7 | 75 | 1.05 | 100 | Water | 1.6 | By Others | By Others | By Others | C | By Others | | |
| 131 | 1 1/2" | A2PB | AMS | L | A-001 | DP-007 | AMS-131- 1 1/2" -A2PB-PP | 0 | 75 | 0.35 | 100 | Water | 0.5 | By Others | By Others | By Others | PP | By Others | | |
| 132 | 1 1/2" | A2PB | AMS | L | DP-007 | MT-002 | AMS-132- 1 1/2" -A2PB-PP | 0.7 | 75 | 1.05 | 100 | Water | 1.6 | By Others | By Others | By Others | PP | By Others | | |
| 133 | 2 1/2" | A2PB | AMS | L | MT-002 | DP-009 | AMS-133- 2 1/2" -A2PB-PP | 0 | 78 | 0.35 | 103 | Water | 0.5 | By Others | By Others | By Others | PP | By Others | | |
| 134 | 2 1/2" | A2PB | AMS | L | DP-009 | TV-034 | AMS-134- 2 1/2" -A2PB-PP | 0.5 | 78 | 0.85 | 103 | Water | 1.3 | By Others | By Others | By Others | PP | By Others | | |
| 135 | 6" | A1PB | HCN | L | A-002 | DP-013 | HCN-135- 6" -A1PB-PP | 0 | 35 | 0.35 | 60 | Water | 0.5 | By Others | By Others | By Others | PP | By Others | | |
| 136 | 6" | A1PB | HCN | L | DP-013 | HE-004 | HCN-136- 6" -A1PB-PP | 0.7 | 35 | 1.05 | 60 | Water | 1.6 | By Others | By Others | By Others | PP | By Others | | |
| 137 | 6" | A1PB | HCN | L | HE-004 | A-002 | HCN-137- 6" -A1PB-C | 0.7 | 32 | 1.05 | 57 | Water | 1.6 | By Others | By Others | By Others | C | By Others | | |
| 138 | 1 1/2" | A1PB | W | L | HE-007-A | M-001 | W-138-1 1/2"-A1PB-PP | 0.73 | 76 | 1.08 | 101 | Water | 1.6 | By Others | By Others | By Others | PP | By Others | | |
| 139 | 2" | A1PB | PW | L | M-001 | A-002 | PW-139- 2" -A1PB-PP | 0.73 | 78.82 | 1.08 | 78 | Water | 1.6 | By Others | By Others | By Others | PP | By Others | | |
| 140 | 38" | H1JA | WG | V | A-002 | TV-027 | WG-140- 38" -H1JA-PP | -0.28 | 37.96 | 0.07 | 63 | Air | 0.1 | By Others | By Others | By Others | PP | By Others | | |
| 141 | 2" | A1PB | WW | L | HE-003-A | MT-003 | WW-141- 2" -A1PB-PP | 0.2 | 80 | 0.55 | 105 | Water | 0.8 | By Others | By Others | By Others | PP | By Others | | |
| 142 | 8" | A0JR | C | L | P-039 | TV-025 | C-142- 8" -A0JR-C | 0.644 | -20 | 0.994 | 5 | Water | 1.5 | By Others | By Others | By Others | C | By Others | | |
| 143 | 1" | A0JR | C | L | TV-025 | HE-006-B | C-143- 1" -A0JR-C | 0.644 | -20 | 0.994 | 5 | Water | 1.5 | By Others | By Others | By Others | C | By Others | | |
| 144 | 1" | A0JW | C | L | HE-006-B | TV-026 | C-144- 1" -A0JW-C | 0.644 | 4 | 0.994 | 29 | Water | 1.5 | By Others | By Others | By Others | C | By Others | | |
| 145 | 6" | A0JR | C | L | TV-025 | C-001 | C-145- 6" -A0JR-C | 0.644 | -20 | 0.994 | 5 | Water | 1.5 | By Others | By Others | By Others | C | By Others | | |
| 146 | 6" | A0JW | C | L | C-001 | TV-026 | C-146- 6" -A0JW-C | 0 | 20 | 0.35 | 45 | Water | 0.5 | By Others | By Others | By Others | C | By Others | | |
| 147 | 8" | A0JW | C | L | TV-026 | TV-003 | C-147- 8" -A0JW-C | 0 | 19 | 0.35 | 44 | Water | 0.5 | By Others | By Others | By Others | C | By Others | | |
| 148 | 2 1/2" | A1PB | BTM | L | DC-001 | TV-029 | BTM-148-2 1/2"-A1PB-PP | 0.2 | 107.9 | 0.55 | 101 | Water | 0.8 | By Others | By Others | By Others | PP | By Others | | |
| 149 | 1 1/2" | A1PB | W | L | TV-029 | HE-007-A | W-149-1 1/2"-A1PB-PP | 0.2 | 107.9 | 0.55 | 101 | Water | 0.8 | By Others | By Others | By Others | PP | By Others | | |
| 150 | 2" | A1PB | BTM | L | TV-029 | P-027 | BTM-150-2"-A1PB-PP | 0.2 | 107.9 | 0.55 | 101 | Water | 0.8 | By Others | By Others | By Others | PP | By Others | | |
| 151 | 2" | A1PB | BTM | L | P-027 | BL-002 | BTM-151-2"-A1PB-PP | 1.6 | 107.9 | 1.95 | 101 | Water | 2.9 | By Others | By Others | By Others | PP | By Others | | |
| 152 | 22" | H1PB | BTM | V | BL-002 | DC-001 | BTM-152-22"-H1PB-PP | -0.05 | 135.8 | 0.3 | 105 | Water | 0.5 | By Others | By Others | By Others | PP | By Others | | |
| 153 | 1 1/2" | A1AS | CS | L | BL-002 | P-029 | CS-153- 1 1/2" -A1AS-PP | 0 | 99.8 | 0.35 | 125 | Water | 0.5 | By Others | By Others | By Others | PP | By Others | | |
| 154 | 1 1/2" | A1AS | CS | L | P-029 | TV-015 | CS-154- 1 1/2" -A1AS-PP | 1.4 | 99.8 | 1.75 | 125 | Water | 2.6 | By Others | By Others | By Others | PP | By Others | | |
| 155 | 2" | A1PB | RE | L | TV-028 | DC-001 | RE-155-2"-A1PB-PP | 0.7 | 25.69 | 1.05 | 51 | Water | 1.6 | By Others | By Others | By Others | PP | By Others | | |
| 156 | 1/4" | H1PB | WG | V | V-002 | TV-027 | WG-156- 1/4" -H1PB-PP | 0 | 28 | 0.35 | 25 | Water | 0.5 | By Others | By Others | By Others | PP | By Others | | |
| 157 | 38" | H1JA | WG | V | B-004 | F-001 | WG-157- 38" -H1JA-PP | 17 | 37.96 | 18.7 | 63 | Air | 28.1 | By Others | By Others | By Others | PP | By Others | | |
| 158 | 1 1/2" | A1PB | WW | L | P-037 | MT-003 | WW-158- 1 1/2" -A1PB-PP | 0.006 | 25 | 0.356 | 50 | Water | 0.5 | By Others | By Others | By Others | PP | By Others | | |
| 159 | 32" | H0AA | AIR | V | B-006 | TV-031 | AIR-159- 32" -H0AA-PP | 7 | 25 | 7.7 | 50 | Air | 11.6 | By Others | By Others | By Others | PP | By Others | | |
| 160 | 18" | H0AA | AIR | V | TV-031 | HE-007-B | AIR-160- 18" -H0AA-PP | 7 | 25 | 7.7 | 50 | Air | 11.6 | By Others | By Others | By Others | PP | By Others | | |
| 161 | 18" | H0AA | AIR | V | HE-007-B | D-001 | AIR-161- 18" -H0AA-H | 7 | 75 | 7.7 | 100 | Air | 11.6 | By Others | By Others | By Others | H | By Others | | |
| 162 | 18" | H0AA | AIR | V | TV-031 | D-001 | AIR-162- 18" -H0AA-C | 7 | 25 | 7.7 | 50 | Air | 11.6 | By Others | By Others | By Others | C | By Others | | |
| 163 | 32" | A2AB | ST | V | EV-001 | FN-002 | ST-163- 32" -A2AB-PP | -0.2 | 80 | 0.2 | 105 | Air | 0.2 | By Others | By Others | By Others | PP | By Others | | |
| 164 | 32" | A2AB | ST | V | FN-002 | HE-007-B | ST-164- 32" -A2AB-PP | 0 | 76 | 0.35 | 101 | Air | 0.5 | By Others | By Others | By Others | PP | By Others | | |
| 165 | 1 1/2" | A1PB | WW | L | HE-007-B | P-037 | WW-165- 1 1/2" -A1PB-PP | 0 | 76 | 0.35 | 101 | Water | 0.5 | By Others | By Others | By Others | PP | By Others | | |
| 166 | 1/8" | A1AY | HP | L | Supplier | P-031 | HP-166- 1/8" -A1AY-PP | 0 | 25 | 0.35 | 50 | Water | 0.5 | By Others | By Others | By Others | PP | By Others | | |
| 167 | 1/8" | A1AY | HP | L | P-031 | MT-003 | HP-167- 1/8" -A1AY-PP | 4.1 | 25 | 4.5 | 50 | Water | 6.8 | By Others | By Others | By Others | PP | By Others | | |
| 168 | 2 1/2" | A1PY | TW | L | MT-003 | P-033 | TW-168- 2 1/2" -A1PY-PP | 0 | 25 | 0.35 | 50 | Water | 0.5 | By Others | By Others | By Others | PP | By Others | | |
| 169 | 2 1/2" | A1PY | TW | L | P-033 | Billingham Beck | TW-169- 2 1/2" -A1PY-PP | 0.7 | 25 | 1.05 | 50 | Water | 1.6 | By Others | By Others | By Others | PP | By Others | | |
| 170 | 2 1/2" | A2PB | AMS | L | EV-001 | TV-032 | AMS-170- 2 1/2" -A2PB-PP | 0 | 75 | 0.35 | 100 | Water | 0.5 | By Others | By Others | By Others | PP | By Others | | |

| | | | | | | | | | | | | | | | | | | | | |
|---|---|---|---|---|---|---|---|---|---|---|---|---|---|---|---|---|---|---|---|---|
| 171 | 2 1/2" | A2PB | AMS | L | TV-032 | TV-034 | AMS-171- 2 1/2" -A2PB-PP | 0 | 75 | 0.35 | 100 | Water | 0.5 | By Others | By Others | By Others | PP | By Others | | |
| 172 | 3 1/2" | A2PB | AMS | L | FCV-019 | DP-015 | AMS-172- 3 1/2" -A2PB-PP | 0 | 80 | 0.35 | 105 | Water | 0.5 | By Others | By Others | By Others | PP | By Others | | |
| 173 | 3 1/2" | A2PB | AMS | L | DP-015 | HE-008 | AMS-173- 3 1/2" -A2PB-PP | 0.7 | 80 | 1.05 | 105 | Water | 1.6 | By Others | By Others | By Others | PP | By Others | | |
| 174 | 3 1/2" | A2PB | AMS | L | HE-008 | EV-001 | AMS-174- 3 1/2" -A2PB-H | 0 | 75 | 0.35 | 100 | Water | 0.5 | By Others | By Others | By Others | H | By Others | | |
| 175 | 1 1/2" | A2PB | AMS | S&L | EV-001 | SP-001 | AMS-175- 1 1/2" -A2PB-PP | 0 | 80 | 0.35 | 105 | Water | 0.5 | By Others | By Others | By Others | PP | By Others | | |
| 176 | 1 1/2" | A2PB | AMS | S&L | SP-001 | HE-009 | AMS-176- 1 1/2" -A2PB-PP | 0.5 | 80 | 0.85 | 105 | Water | 1.3 | By Others | By Others | By Others | PP | By Others | | |
| 177 | 1 1/2" | A2PB | AMS | S&L | HE-009 | SP-002 | AMS-177- 1 1/2" -A2PB-C | 0 | 50 | 0.35 | 75 | Water | 0.5 | By Others | By Others | By Others | C | By Others | | |
| 178 | 1 1/2" | A2PB | AMS | S&L | SP-002 | CT-001 | AMS-178- 1 1/2" -A2PB-C | 0.5 | 50 | 0.85 | 75 | Water | 1.3 | By Others | By Others | By Others | C | By Others | | |
| 179 | 1" | A2PB | AMS | S&L | CT-001 | CY-001 | AMS-179- 1" -A2PB-PP | 0 | 50 | 0.35 | 75 | Water | 0.5 | By Others | By Others | By Others | PP | By Others | | |
| 180 | 1" | A2PB | AMS | S&L | CY-001 | D-001 | AMS-180- 1" -A2PB-PP | 0 | 50 | 0.35 | 75 | Water | 0.5 | By Others | By Others | By Others | PP | By Others | | |
| 181 | 1" | A0PB | AMS | S | D-001 | CY-002 | AMS-181-1"-A0PB-PP | 0 | 75 | 0.35 | 100 | Water | 0.5 | By Others | By Others | By Others | PP | By Others | | |
| 182 | 1" | A0PB | AMS | S | CY-002 | Customer | AMS-182-1"-A0PB-PP | 0 | 75 | 0.35 | 100 | Water | 0.5 | By Others | By Others | By Others | PP | By Others | | |
| 183 | 32" | H0AA | AIR | V | D-001 | Atmosphere | AIR-183- 32" -H0AA-PP | 0 | 75 | 0.35 | 100 | Air | 0.5 | By Others | By Others | By Others | PP | By Others | | |
| 184 | 1 1/2" | A2PB | AMS | L | TV-034 | CT-001 | AMS-184- 1 1/2" -A2PB-PP | 0.2 | 50 | 0.55 | 75 | Water | 0.8 | By Others | By Others | By Others | PP | By Others | | |
| 185 | 1 1/2" | A1AS | CS | L | HE-008 | TV-015 | CS-185- 1 1/2" -A1AS-PP | 0 | 100 | 0.35 | 125 | Water | 0.5 | By Others | By Others | By Others | PP | By Others | | |
| 186 | 2" | A1AW | CW | L | Supplier | P-035 | CW-186- 2" -A1AW-C | 0 | 25 | 0.35 | 50 | Water | 0.5 | By Others | By Others | By Others | C | By Others | | |
| 187 | 2" | A1AW | CW | L | P-035 | HE-009 | CW-187- 2" -A1AW-C | 1.1 | 25 | 1.45 | 50 | Water | 2.2 | By Others | By Others | By Others | C | By Others | | |
| 188 | 2" | A1AW | CW | L | HE-009 | ACH8 | CW-188- 2" -A1AW-PP | 0 | 45 | 0.35 | 70 | Water | 0.5 | By Others | By Others | By Others | PP | By Others | | |
| 189 | 12" | A2AS | ST | V | TV-030 | TV-033 | ST-189- 12" -A2AS-H | 0.2 | 210 | 0.55 | 235 | Air | 0.8 | By Others | By Others | By Others | H | By Others | | |
| 190 | 12" | A2AS | ST | V | TV-033 | Industrial Plant | ST-190- 12" -A2AS-H | 0.2 | 210 | 0.55 | 235 | Air | 7.5 | By Others | By Others | By Others | H | By Others | | |
| 191 | 8" | A2AS | ST | V | TV-033 | HE-008 | ST-191- 8" -A2AS-H | 0.2 | 210 | 0.55 | 235 | Air | 0.8 | By Others | By Others | By Others | H | By Others | | |
| 192 | 8" | A2AS | ST | V | TV-030 | BL-002 | ST-192- 8" -A2AS-H | 0.2 | 210 | 0.55 | 235 | Air | 0.8 | By Others | By Others | By Others | H | By Others | | |

The University of Nottingham

UNITED KINGDOM · CHINA · MALAYSIA

# 4. Valve list

**ACTUATED VALVE LIST**

| | Rev 0 | | Rev 1 | | Rev 2 | | Rev 3 | | Rev 4 | |
|---|---|---|---|---|---|---|---|---|---|---|
| | Initials | Date | Initials | Date | Initials | Date | Initials | Date | Initials | Date |
| Made/Revised By: | WKY | 4/26/2022 | WKY | 4/27/2022 | | | | | | |
| Checked By: | GYA | 4/26/2022 | GYA | 4/27/2022 | | | | | | |
| Approved By: | GYA/SJJ | 4/26/2022 | GYA/SJJ | 4/27/2022 | | | | | | |
| | | | | | | | | | control | globe |

The University of Nottingham

UNITED KINGDOM · CHINA · MALAYSIA

| | | | |
|---|---|---|---|
| PAGE | 3 | OF | 3 |
| CLIENT: | Lucite | | |
| LOCATION: | Cassel Works, New road,Billingham TS23 1LE | | |
| PROJECT: | Hydrogen Cyanide and AMS Plant Replacement | | |
| GROUP NO.: | 6 | | |
| JOB NO.: | 2022-001 | | |
| DOCUMENT NO.: | 1 | | |

| REV | TAG No. | Valve Description | P& ID No | P& ID Grid Reference | Line No. | Syst No. If Applicable | Valve Size | On-Off/Control | Valve Type | Connection Type | Manufacturer | Material of Construction (MoC) | Valve Specification | Actuator Specification | Fail Safe State (FC/FO/SP) | Comments/Remarks |
|---|---|---|---|---|---|---|---|---|---|---|---|---|---|---|---|---|
| 1 | ESD-001 | Emergency shut down valve | 001 | B2 | AIR-001-80"-H0AA-PP | TBC | TBC | On-Off | Gate | Flanged | TBC | CS | TBC | TBC | SP | |
| 2 | ESD-002 | Emergency shut down valve | 001 | B3 | NG-009-3"-C1PH-PP | TBC | TBC | On-Off | Gate | Flanged | TBC | CS | TBC | TBC | SP | |
| 3 | ESD-003 | Emergency shut down valve | 001 | C3 | NG-067-12"-A1PH-PP | TBC | TBC | On-Off | Gate | Flanged | TBC | CS | TBC | TBC | SP | |
| 4 | ESD-004 | Emergency shut down valve | 001 | A3 | C-050-5"-A0JW-PP | TBC | TBC | On-Off | Gate | Flanged | TBC | 304 SS | TBC | TBC | SP | |
| 5 | ESD-005 | Emergency shut down valve | 001 | A4 | NH-019-1 1/4"-H0LD-PP | TBC | TBC | On-Off | Gate | Flanged | TBC | 316L SS | TBC | TBC | SP | |
| 6 | ESD-006 | Emergency shut down valve | 001 | C2 | PW-071-4"-A0AW-PP | TBC | TBC | On-Off | Gate | Flanged | TBC | CS | TBC | TBC | SP | |
| 7 | ESD-007 | Emergency shut down valve | 001 | E2 | PW-075-4"-A1AS-PP | TBC | TBC | On-Off | Gate | Flanged | TBC | CS | TBC | TBC | SP | |
| 8 | ESD-008 | Emergency shut down valve | 001 | D3 | AIR-008-52"-H0AA-H | TBC | TBC | On-Off | Gate | Flanged | TBC | CS | TBC | TBC | SP | |
| 9 | ESD-009 | Emergency shut down valve | 001 | D3 | NH-026-20"-H0LD-H | TBC | TBC | On-Off | Gate | Flanged | TBC | 316L SS | TBC | TBC | SP | |
| 10 | ESD-010 | Emergency shut down valve | 001 | D3 | NG-018-20"-A1PH-H | TBC | TBC | On-Off | Gate | Flanged | TBC | CS | TBC | TBC | SP | |
| 11 | ESD-011 | Emergency shut down valve | 001 | F2 | SA-101-1/2"-A3PB-PP | TBC | TBC | On-Off | Gate | Flanged | TBC | CS | TBC | TBC | SP | |
| 12 | ESD-012 | Emergency shut down valve | 001 | F2 | SA-104-1 1/2"-A2PB-PP | TBC | TBC | On-Off | Gate | Flanged | TBC | CS | TBC | TBC | SP | |
| 13 | ESD-013 | Emergency shut down valve | 001 | F3 | SA-104-1 1/2"-A2PB-PP | TBC | TBC | On-Off | Gate | Flanged | TBC | CS | TBC | TBC | SP | |
| 14 | ESD-014 | Emergency shut down valve | 001 | F3 | AMS-131-1 1/2"-A2PB-PP | TBC | TBC | On-Off | Gate | Flanged | TBC | CS | TBC | TBC | SP | |
| 15 | ESD-015 | Emergency shut down valve | 001 | G3 | AMS-132-1 1/2"-A2PB-PP | TBC | TBC | On-Off | Gate | Flanged | TBC | CS | TBC | TBC | SP | |
| 16 | ESD-016 | Emergency shut down valve | 001 | G4 | PRO-031-2"-A1PB-PP | TBC | TBC | On-Off | Gate | Flanged | TBC | CS | TBC | TBC | SP | |
| 17 | ESD-017 | Emergency shut down valve | 001 | H3 | PW-139-2"-A1PB-PP | TBC | TBC | On-Off | Gate | Flanged | TBC | CS | TBC | TBC | SP | |
| C | ESD-018 | Emergency shut down valve | 001 | B6 | ST-058-14"-A2AS-H | TBC | TBC | On-Off | Gate | Flanged | TBC | CS | TBC | TBC | SP | |
| 19 | ESD-019 | Emergency shut down valve | 001 | F5 | WW-141-2"-A1PB-PP | TBC | TBC | On-Off | Gate | Flanged | TBC | CS | TBC | TBC | SP | |
| 20 | ESD-020 | Emergency shut down valve | 001 | G5 | TW-169-2 1/2"-A1PY-PP | TBC | TBC | On-Off | Gate | Flanged | TBC | CS | TBC | TBC | SP | |
| 21 | ESD-021 | Emergency shut down valve | 001 | E6 | AMS-134-2 1/2"-A2PB-PP | TBC | TBC | On-Off | Gate | Flanged | TBC | CS | TBC | TBC | SP | |
| 22 | NRV-001 | Check valve | 001 | B4 | C-052-8"-A0JW-PP | TBC | TBC | On-Off | Gate | Flanged | TBC | 304 SS | TBC | TBC | SP | |
| 23 | NRV-002 | Check valve | 001 | B4 | C-052-8"-A0JW-PP | TBC | TBC | On-Off | Gate | Flanged | TBC | 304 SS | TBC | TBC | SP | |
| 24 | NRV-003 | Check valve | 001 | D2 | PW-072-4"-A0AW-PP | TBC | TBC | On-Off | Gate | Flanged | TBC | CS | TBC | TBC | SP | |
| 25 | NRV-004 | Check valve | 001 | D2 | PW-072-4"-A0AW-PP | TBC | TBC | On-Off | Gate | Flanged | TBC | CS | TBC | TBC | SP | |
| 26 | NRV-005 | Check valve | 001 | D2 | SH-081-3/8"-A2PD-PP | TBC | TBC | On-Off | Gate | Flanged | TBC | CS | TBC | TBC | SP | |
| 27 | NRV-006 | Check valve | 001 | D2 | HCL-084-3/8"-A2PB-PP | TBC | TBC | On-Off | Gate | Flanged | TBC | CS | TBC | TBC | SP | |
| 28 | NRV-007 | Check valve | 001 | E2 | PW-075-4"-A1AS-PP | TBC | TBC | On-Off | Gate | Flanged | TBC | CS | TBC | TBC | SP | |
| 29 | NRV-008 | Check valve | 001 | E2 | PW-075-4"-A1AS-PP | TBC | TBC | On-Off | Gate | Flanged | TBC | CS | TBC | TBC | SP | |
| 30 | NRV-009 | Check valve | 001 | E2 | PW-079-6"-A1AS-PP | TBC | TBC | On-Off | Gate | Flanged | TBC | CS | TBC | TBC | SP | |
| 31 | NRV-010 | Check valve | 001 | E2 | PW-079-6"-A1AS-PP | TBC | TBC | On-Off | Gate | Flanged | TBC | CS | TBC | TBC | SP | |
| 34 | NRV-013 | Check valve | 001 | E2 | PW-097-1 1/2"-A0AW-PP | TBC | TBC | On-Off | Gate | Flanged | TBC | CS | TBC | TBC | SP | |
| 35 | NRV-014 | Check valve | 001 | E2 | PW-097-1 1/2"-A0AW-PP | TBC | TBC | On-Off | Gate | Flanged | TBC | CS | TBC | TBC | SP | |
| 36 | NRV-015 | Check valve | 001 | F2 | SA-102-1/2"-A3PB-PP | TBC | TBC | On-Off | Gate | Flanged | TBC | CS | TBC | TBC | SP | |
| 37 | NRV-016 | Check valve | 001 | F2 | SA-102-1/2"-A3PB-PP | TBC | TBC | On-Off | Gate | Flanged | TBC | CS | TBC | TBC | SP | |
| 38 | NRV-017 | Check valve | 001 | G2 | PW-100-1 1/2"-A0AW-PP | TBC | TBC | On-Off | Gate | Flanged | TBC | CS | TBC | TBC | SP | |
| 39 | NRV-018 | Check valve | 001 | G2 | PW-100-1 1/2"-A0AW-PP | TBC | TBC | On-Off | Gate | Flanged | TBC | CS | TBC | TBC | SP | |
| 40 | NRV-019 | Check valve | 001 | F2 | CW-109-10"-A1AW-C | TBC | TBC | On-Off | Gate | Flanged | TBC | CS | TBC | TBC | SP | |
| 41 | NRV-020 | Check valve | 001 | F2 | CW-109-10"-A1AW-C | TBC | TBC | On-Off | Gate | Flanged | TBC | CS | TBC | TBC | SP | |
| 42 | NRV-021 | Check valve | 001 | G2 | CW-112-5"-A1AW-C | TBC | TBC | On-Off | Gate | Flanged | TBC | CS | TBC | TBC | SP | |
| 43 | NRV-022 | Check valve | 001 | G2 | CW-112-5"-A1AW-C | TBC | TBC | On-Off | Gate | Flanged | TBC | CS | TBC | TBC | SP | |
| 44 | NRV-023 | Check valve | 001 | G2 | SA-106-5"-A2PB-PP | TBC | TBC | On-Off | Gate | Flanged | TBC | CS | TBC | TBC | SP | |
| 45 | NRV-024 | Check valve | 001 | G2 | SA-106-5"-A2PB-PP | TBC | TBC | On-Off | Gate | Flanged | TBC | CS | TBC | TBC | SP | |
| 46 | NRV-025 | Check valve | 001 | F2 | SA-104-1 1/2"-A2PB-PP | TBC | TBC | On-Off | Gate | Flanged | TBC | CS | TBC | TBC | SP | |
| 47 | NRV-026 | Check valve | 001 | F2 | SA-104-1 1/2"-A2PB-PP | TBC | TBC | On-Off | Gate | Flanged | TBC | CS | TBC | TBC | SP | |
| 48 | NRV-027 | Check valve | 001 | G3 | AMS-129-5"-A2PB-PP | TBC | TBC | On-Off | Gate | Flanged | TBC | CS | TBC | TBC | SP | |
| 49 | NRV-028 | Check valve | 001 | G3 | AMS-129-5"-A2PB-PP | TBC | TBC | On-Off | Gate | Flanged | TBC | CS | TBC | TBC | SP | |
| 50 | NRV-029 | Check valve | 001 | G3 | AMS-132-1 1/2"-A2PB-PP | TBC | TBC | On-Off | Gate | Flanged | TBC | CS | TBC | TBC | SP | |
| 51 | NRV-030 | Check valve | 001 | G3 | AMS-132-1 1/2"-A2PB-PP | TBC | TBC | On-Off | Gate | Flanged | TBC | CS | TBC | TBC | SP | |
| 52 | NRV-031 | Check valve | 001 | G3 | AMS-134-2 1/2"-A2PB-PP | TBC | TBC | On-Off | Gate | Flanged | TBC | CS | TBC | TBC | SP | |
| 53 | NRV-032 | Check valve | 001 | G3 | AMS-134-2 1/2"-A2PB-PP | TBC | TBC | On-Off | Gate | Flanged | TBC | CS | TBC | TBC | SP | |
| 54 | NRV-033 | Check valve | 001 | G3 | HCN-136-6"-A1PB-PP | TBC | TBC | On-Off | Gate | Flanged | TBC | CS | TBC | TBC | SP | |
| 55 | NRV-034 | Check valve | 001 | G3 | HCN-136-6"-A1PB-PP | TBC | TBC | On-Off | Gate | Flanged | TBC | CS | TBC | TBC | SP | |
| 56 | NRV-035 | Check valve | 001 | H3 | PRO-032-2"-A1PB-PP | TBC | TBC | On-Off | Gate | Flanged | TBC | CS | TBC | TBC | SP | |
| 57 | NRV-036 | Check valve | 001 | H3 | PRO-032-2"-A1PB-PP | TBC | TBC | On-Off | Gate | Flanged | TBC | CS | TBC | TBC | SP | |
| 58 | NRV-037 | Check valve | 001 | H2 | C-123-5"-A0JW-PP | TBC | TBC | On-Off | Gate | Flanged | TBC | 304 SS | TBC | TBC | SP | |
| 59 | NRV-038 | Check valve | 001 | H2 | C-123-5"-A0JW-PP | TBC | TBC | On-Off | Gate | Flanged | TBC | 304 SS | TBC | TBC | SP | |
| 60 | NRV-039 | Check valve | 001 | C5 | HCN-037-2 1/2"-A1PB-PP | TBC | TBC | On-Off | Gate | Flanged | TBC | CS | TBC | TBC | SP | |
| 61 | NRV-040 | Check valve | 001 | C5 | HCN-037-2 1/2"-A1PB-PP | TBC | TBC | On-Off | Gate | Flanged | TBC | CS | TBC | TBC | SP | |
| 62 | NRV-041 | Check valve | 001 | C5 | BTM-151-2"-A1PB-PP | TBC | TBC | On-Off | Gate | Flanged | TBC | CS | TBC | TBC | SP | |
| 63 | NRV-042 | Check valve | 001 | C6 | BTM-151-2"-A1PB-PP | TBC | TBC | On-Off | Gate | Flanged | TBC | CS | TBC | TBC | SP | |
| 64 | NRV-043 | Check valve | 001 | C6 | CS-154-1 1/2"-A1AS-PP | TBC | TBC | On-Off | Gate | Flanged | TBC | CS | TBC | TBC | SP | |
| 65 | NRV-044 | Check valve | 001 | C6 | CS-154-1 1/2"-A1AS-PP | TBC | TBC | On-Off | Gate | Flanged | TBC | CS | TBC | TBC | SP | |
| 66 | NRV-045 | Check valve | 001 | F4 | HP-167-1/8"-A1AY-PP | TBC | TBC | On-Off | Gate | Flanged | TBC | CS | TBC | TBC | SP | |
| 67 | NRV-046 | Check valve | 001 | F5 | HP-167-1/8"-A1AY-PP | TBC | TBC | On-Off | Gate | Flanged | TBC | CS | TBC | TBC | SP | |
| 68 | NRV-047 | Check valve | 001 | F5 | WW-158-1 1/2"-A1PB-PP | TBC | TBC | On-Off | Gate | Flanged | TBC | CS | TBC | TBC | SP | |
| 69 | NRV-048 | Check valve | 001 | F5 | WW-158-1 1/2"-A1PB-PP | TBC | TBC | On-Off | Gate | Flanged | TBC | CS | TBC | TBC | SP | |
| 70 | NRV-049 | Check valve | 001 | G5 | TW-169-2 1/2"-A1PY-PP | TBC | TBC | On-Off | Gate | Flanged | TBC | CS | TBC | TBC | SP | |
| 71 | NRV-050 | Check valve | 001 | G5 | TW-169-2 1/2"-A1PY-PP | TBC | TBC | On-Off | Gate | Flanged | TBC | CS | TBC | TBC | SP | |
| 72 | NRV-051 | Check valve | 001 | F5 | AMS-173-3 1/2"-A2PB-PP | TBC | TBC | On-Off | Gate | Flanged | TBC | CS | TBC | TBC | SP | |
| 73 | NRV-052 | Check valve | 001 | F6 | AMS-173-3 1/2"-A2PB-PP | TBC | TBC | On-Off | Gate | Flanged | TBC | CS | TBC | TBC | SP | |
| 74 | NRV-053 | Check valve | 001 | F6 | AMS-187-2"-A1AW-C | TBC | TBC | On-Off | Gate | Flanged | TBC | CS | TBC | TBC | SP | |
| 75 | NRV-054 | Check valve | 001 | F6 | AMS-187-2"-A1AW-C | TBC | TBC | On-Off | Gate | Flanged | TBC | CS | TBC | TBC | SP | |
| 76 | NRV-055 | Check valve | 001 | C3 | C-040-8"-A0JW-PP | TBC | TBC | On-Off | Gate | Flanged | TBC | 304 SS | TBC | TBC | SP | |
| 77 | NRV-056 | Check valve | 001 | C4 | C-040-8"-A0JW-PP | TBC | TBC | On-Off | Gate | Flanged | TBC | 304 SS | TBC | TBC | SP | |
| 78 | NRV-057 | Check valve | 001 | B5 | C-142-8"-A0JR-C | TBC | TBC | On-Off | Gate | Flanged | TBC | 304 SS | TBC | TBC | SP | |
| 79 | NRV-058 | Check valve | 001 | B5 | C-142-8"-A0JR-C | TBC | TBC | On-Off | Gate | Flanged | TBC | 304 SS | TBC | TBC | SP | |
| 114 | FCV-001 | Flowrate control valve | 001 | B2 | AIR-002-80"-H0AA-PP | TBC | TBC | Control | Globe | Flanged | TBC | CS | TBC | TBC | FC | |
| 115 | FCV-002 | Flowrate control valve | 001 | B3 | BW-055-1 1/4"-A1AS-H | TBC | TBC | Control | Globe | Flanged | TBC | CS | TBC | TBC | FC | |
| 116 | FCV-003 | Flowrate control valve | 001 | B3 | NG-009-3"-C1PH-PP | TBC | TBC | Control | Globe | Flanged | TBC | CS | TBC | TBC | FC | |
| 117 | FCV-004 | Flowrate control valve | 001 | B4 | C-048-8"-A0JW-PP | TBC | TBC | Control | Globe | Flanged | TBC | 304 SS | TBC | TBC | FC | |
| 118 | FCV-005 | Flowrate control valve | 001 | B3 | CW-053-8"-A1AW-PP | TBC | TBC | Control | Globe | Flanged | TBC | CS | TBC | TBC | FC | |
| 119 | FCV-006 | Flowrate control valve | 001 | B3 | AIR-070-26"-H0AA-PP | TBC | TBC | Control | Globe | Flanged | TBC | CS | TBC | TBC | FC | |
| 120 | FCV-007 | Flowrate control valve | 001 | D2 | PW-071-4"-A0AW-PP | TBC | TBC | Control | Globe | Flanged | TBC | CS | TBC | TBC | FC | |
| 121 | FCV-008 | Flowrate control valve | 001 | D2 | SH-080-3/8"-A2PD-PP | TBC | TBC | Control | Globe | Flanged | TBC | CS | TBC | TBC | FC | |
| 122 | FCV-009 | Flowrate control valve | 001 | D2 | HCL-083-3/8"-A2PB-PP | TBC | TBC | Control | Globe | Flanged | TBC | CS | TBC | TBC | FC | |
| 123 | FCV-010 | Flowrate control valve | 001 | D2 | HCL-086-1/8"-A2PB-PP | TBC | TBC | Control | Globe | Flanged | TBC | CS | TBC | TBC | FC | |
| 124 | FCV-011 | Flowrate control valve | 001 | D2 | SH-087-1/8"-A2PD-PP | TBC | TBC | Control | Globe | Flanged | TBC | CS | TBC | TBC | FC | |
| 125 | FCV-012 | Flowrate control valve | 001 | E3 | PW-089-3"-A1AS-PP | TBC | TBC | Control | Globe | Flanged | TBC | CS | TBC | TBC | FC | |
| 126 | FCV-013 | Flowrate control valve | 001 | H3 | PW-098-1 1/2"-A0AW-PP | TBC | TBC | Control | Globe | Flanged | TBC | CS | TBC | TBC | FC | |
| 127 | FCV-014 | Flowrate control valve | 001 | F3 | C-120-4"-A0JR-C | TBC | TBC | Control | Globe | Flanged | TBC | 304 SS | TBC | TBC | FC | |
| 128 | FCV-015 | Flowrate control valve | 001 | G2 | PW-099-1 1/2"-A0AW-PP | TBC | TBC | Control | Globe | Flanged | TBC | CS | TBC | TBC | FC | |
| 129 | FCV-016 | Flowrate control valve | 001 | C5 | RE-155-2"-A1PB-PP | TBC | TBC | Control | Globe | Flanged | TBC | CS | TBC | TBC | FC | |
| 130 | FCV-017 | Flowrate control valve | 001 | C5 | HCN-038-1 1/4"-A1PB-PP | TBC | TBC | Control | Globe | Flanged | TBC | CS | TBC | TBC | FC | |
| 131 | FCV-018 | Flowrate control valve | 001 | F5 | AIR-159-32"-H0AA-PP | TBC | TBC | Control | Globe | Flanged | TBC | CS | TBC | TBC | FC | |
| 132 | FCV-019 | Flowrate control valve | 001 | F5 | AMS-172-3 1/1"-A2PB-PP | TBC | TBC | Control | Globe | Flanged | TBC | CS | TBC | TBC | FC | |
| 133 | FCV-020 | Flowrate control valve | 001 | F5 | AIR-162-18"-H0AA-C | TBC | TBC | Control | Globe | Flanged | TBC | CS | TBC | TBC | FC | |
| 134 | FCV-021 | Flowrate control valve | 001 | F4 | HP-167-1/8"-A1AY-PP | TBC | TBC | Control | Globe | Flanged | TBC | CS | TBC | TBC | FC | |
| 135 | PCV-001 | Pressure control valve | 001 | C3 | TG-063-64"-A0AA-PP | TBC | TBC | Control | Globe | Flanged | TBC | CS | TBC | TBC | FP | |
| 136 | PCV-002 | Pressure control valve | 001 | D2 | ST-057-14"-A2AS-H | TBC | TBC | Control | Globe | Flanged | TBC | CS | TBC | TBC | FP | |
| 137 | PCV-003 | Pressure control valve | 001 | D3 | ST-058-14"-A2AS-H | TBC | TBC | Control | Globe | Flanged | TBC | CS | TBC | TBC | FP | |
| 138 | PCV-004 | Pressure control valve | 001 | E2 | OX-094-1/8"-H0AA-C | TBC | TBC | Control | Globe | Flanged | TBC | CS | TBC | TBC | FP | |
| 139 | PCV-005 | Pressure control valve | 001 | F2 | ST-057-14"-A2AS-H | TBC | TBC | Control | Globe | Flanged | TBC | CS | TBC | TBC | FP | |
| 140 | PCV-006 | Pressure control valve | 001 | E3 | ST-091-18"-A2AS-H | TBC | TBC | Control | Globe | Flanged | TBC | CS | TBC | TBC | FP | |
| 141 | PCV-007 | Pressure control valve | 001 | C5 | WG-156-1/4"-H1PB-PP | TBC | TBC | Control | Globe | Flanged | TBC | CS | TBC | TBC | FP | |
| 142 | TCV-001 | Temperature control valve | 001 | C2 | AIR-006-56"-H0AA-PP | TBC | TBC | Control | Globe | Flanged | TBC | CS | TBC | TBC | FC | |
| 143 | TCV-002 | Temperature control valve | 001 | C3 | NG-016-12"-A1PH-PP | TBC | TBC | Control | Globe | Flanged | TBC | CS | TBC | TBC | FC | |
| 144 | TCV-003 | Temperature control valve | 001 | C3 | NH-023-14"-H0LD-PP | TBC | TBC | Control | Globe | Flanged | TBC | 316L SS | TBC | TBC | FC | |
| 145 | TCV-004 | Temperature control valve | 001 | B4 | C-043-2 1/2"-A0JW-PP | TBC | TBC | Control | Globe | Flanged | TBC | 304 SS | TBC | TBC | FC | |
| 146 | TCV-005 | Temperature control valve | 001 | G2 | CW-112-5"-A1AW-C | TBC | TBC | Control | Globe | Flanged | TBC | CS | TBC | TBC | FC | |
| 147 | TCV-006 | Temperature control valve | 001 | G3 | CW-114-3"-A1AW-C | TBC | TBC | Control | Globe | Flanged | TBC | CS | TBC | TBC | FC | |
| 148 | TCV-007 | Temperature control valve | 001 | G3 | C-125-2"-A0JR-C | TBC | TBC | Control | Globe | Flanged | TBC | 304 SS | TBC | TBC | FC | |
| 149 | TCV-008 | Temperature control valve | 001 | G3 | CW-117-8"-A1AW-C | TBC | TBC | Control | Globe | Flanged | TBC | CS | TBC | TBC | FC | |
| 150 | TCV-009 | Temperature control valve | 001 | C5 | C-145-8"-A0JR-C | TBC | TBC | Control | Globe | Flanged | TBC | 304 SS | TBC | TBC | FC | |
| 151 | TCV-010 | Temperature control valve | 001 | D5 | ST-192-8"-A2AS-H | TBC | TBC | Control | Globe | Flanged | TBC | CS | TBC | TBC | FC | |
| 152 | TCV-011 | Temperature control valve | 001 | D5 | C-143-1"-A0JR-C | TBC | TBC | Control | Globe | Flanged | TBC | 304 SS | TBC | TBC | FC | |
| 153 | TCV-012 | Temperature control valve | 001 | F6 | ST-191-8"-A2AS-H | TBC | TBC | Control | Globe | Flanged | TBC | CS | TBC | TBC | FC | |
| 154 | TCV-013 | Temperature control valve | 001 | F6 | AMS-187-2"-A1AW-C | TBC | TBC | Control | Globe | Flanged | TBC | CS | TBC | TBC | FC | |
| 155 | TCV-014 | Temperature control valve | 001 | D3 | CW-093-8"-A1AW-C | TBC | TBC | Control | Globe | Flanged | TBC | CS | TBC | TBC | FC | |
| 156 | LCV-001 | Level control valve | 001 | B4 | C-052-8"-A0JW-PP | TBC | TBC | Control | Globe | Flanged | TBC | 304 SS | TBC | TBC | FC | |
| 157 | LCV-002 | Level control valve | 001 | B4 | NH-020-1 1/4"-H0LD-C | TBC | TBC | Control | Globe | Flanged | TBC | 316L SS | TBC | TBC | FC | |
| 158 | LCV-003 | Level control valve | 001 | E2 | PW-075-4"-A1AS-PP | TBC | TBC | Control | Globe | Flanged | TBC | CS | TBC | TBC | FC | |
| 159 | LCV-004 | Level control valve | 001 | E3 | PW-079-6"-A1AS-PP | TBC | TBC | Control | Globe | Flanged | TBC | CS | TBC | TBC | FC | |
| 160 | LCV-005 | Level control valve | 001 | B6 | W-149-1 1/2"-A1PB-PP | TBC | TBC | Control | Globe | Flanged | TBC | CS | TBC | TBC | FC | |
| 161 | LCV-006 | Level control valve | 001 | G5 | TW-169-2 1/2"-A1PY-PP | TBC | TBC | Control | Globe | Flanged | TBC | CS | TBC | TBC | FC | |
| 162 | ACV-001 | Analyse control valve | 001 | B3 | C-050-5"-A0JW-PP | TBC | TBC | Control | Globe | Flanged | TBC | 304 SS | TBC | TBC | FC | |
| 163 | ACV-002 | Analyse control valve | 001 | F3 | NH-069-1 1/4"-H0LD-PP | TBC | TBC | Control | Globe | Flanged | TBC | 316L SS | TBC | TBC | FC | |

The University of Nottingham

UNITED KINGDOM · CHINA · MALAYSIA

# 5. Equipment list

| REV | REVISION DESCRIPTION | DATE | BY | CHK | APPR |
|---|---|---|---|---|---|
| C | | | | | |
| B | | | | | |
| A | ISSUED FOR INTERNAL REVIEW | | | | |

CLIENT:
LOCATION:
PROJECT:
JOB NO.: 1

The University of Nottingham
UNITED KINGDOM - CHINA - MALAYSIA

EQUIPMENT LIST

SHEET 1 OF

DOCUMENT NUMBER

| EQUIPMENT DESCRIPTION | | | | | | | | | | OPERATING | | DESIGN | | INSULATION | | | |
|---|---|---|---|---|---|---|---|---|---|---|---|---|---|---|---|---|---|
| Tag No. | Equipment Description | Equipment Type | Equipment Duty Capacity | Dimensions H:W:D m | Weight ** kg | Materials of Construction | Fluid | Connection Type | P&ID NO. | PRES. (barg) | TEMP. (°C) | PRES. (barg) | TEMP. (°C) | INSUL. CLASS | INSUL. MM | COMMENTS | ISSUE/ REV |
| 1 | 2 | 3 | 4 | 5 | 6 | 7 | 8 | 9 | 10 | 11 | 12 | 13 | 14 | 15 | 16 | 17 | 18 |
| P-005 | Process water pump | Centrifugal pump | 84.1m³/h | 1:1:1 | 100 | 304SS | L | RF | 001 | 0.5 | 5 | 1 | 30 | BY OTHER | BY OTHER | | |
| P-006 | Back-up pump | Centrifugal pump | N/A | 1:1:1 | 100 | 304SS | L | RF | 001 | N/A | N/A | 1 | 30 | BY OTHER | BY OTHER | Back-up pump no flow at normal condition | |
| P-009 | NaOH solution pump | Centrifugal pump | 0.6 m³/h | 1: 0.5: 0.5 | 2 | 316SS | L | RF | 001 | 4.7 | 25 | 5 | 50 | BY OTHER | BY OTHER | | |
| P-010 | HCl solution pump | Centrifugal pump | N/A | 1: 0.5: 0.5 | 2 | 316SS | L | RF | 001 | N/A | N/A | 5 | 50 | BY OTHER | BY OTHER | | |
| WT-001 | Process water treatment | Vessel | 74.8 m3/h | 4.7:10.1:6.7 | TBA | CS/316SS | L | RF | 001 | 0 | 5 | 0.5 | 30 | BY OTHER | BY OTHER | | |
| T-001 | Process water tank | Tank | 9.7E+02 m3 | 16.2:10.1:6.8 | TBA | 316SS | L | RF | 001 | 0 | 5 | 0.5 | 30 | BY OTHER | BY OTHER | | |
| P-007 | Process water pump | Centrifugal pump | 84.0m³/h | 1:1:1 | 100 | 304SS | L | RF | 001 | 0.5 | 5 | 1 | 30 | BY OTHER | BY OTHER | | |
| P-008 | Back-up pump | Centrifugal pump | N/A | 1:1:1 | 100 | 304SS | L | RF | 001 | N/A | N/A | 1 | 30 | BY OTHER | BY OTHER | Back-up pump no flow at normal condition | |
| P-015 | process water pump | Centrifugal pump | 8.6 m3/h | 1: 0.5: 0.5 | 20 | 304SS | L | RF | 001 | -0.73 | 99 | 0.5 | 125 | BY OTHER | BY OTHER | | |
| P-016 | Back-up pump | Centrifugal pump | N/A | 1: 0.5: 0.5 | 20 | 304SS | L | RF | 001 | N/A | N/A | 0.5 | 125 | BY OTHER | BY OTHER | Back-up pump no flow at normal condition | |
| ED-001 | External deaeration | Vessel | 44 m3 | 5.4:5.6:3.6 | TBA | 316SS | L | RF | 001 | 4 | 5/100 | 4.5 | 30/125 | BY OTHER | BY OTHER | | |
| P-011 | Process water pump | Centrifugal pump | 81.7 m³/h | 1:1:1 | 95 | 304SS | LV | RF/RTJ | 001 | -0.7 | 100 | 1 | 125 | BY OTHER | BY OTHER | | |
| P-012 | Back-up pump | Centrifugal pump | N/A | 1:1:1 | 95 | 304SS | L | RF | 001 | N/A | N/A | 1 | 125 | BY OTHER | BY OTHER | Back-up pump no flow at normal condition | |
| P-021A | Cooling water pump | Centrifugal pump | 81.7 m³/h | 1:0.5:0.5 | 95 | 304SS | L | RF | 001 | -0.92 | 25 | 1 | 50 | BY OTHER | BY OTHER | | |
| P-022A | Back-up pump | Centrifugal pump | N/A | 1:0.5:0.5 | 95 | 304SS | L | RF | 001 | N/A | N/A | 1 | 50 | BY OTHER | BY OTHER | Back-up pump no flow at normal condition | |
| DP-001 | $H_2SO_4$ solution pump | Diaphragm pump | 1.2 m³/h | 1: 0.5: 0.5 | 4 | 316SS/F46 | L | RF | 001 | 3.97 | 25 | 4.5 | 50 | BY OTHER | BY OTHER | Pump/ Diaphragm | |
| DP-002 | Sulfuric acid pump | Diaphragm pump | N/A | 1: 0.5: 0.5 | 4 | 316SS/F46 | L | RF | 001 | N/A | N/A | 4.5 | 50 | BY OTHER | BY OTHER | Pump/ Diaphragm | |
| DP-003 | Sulfuric aicd pump | Diaphragm pump | 10.9 m³/h | 1:1:1 | 22 | 316SS/F46 | L | RF | 001 | 0.9 | 30 | 1.5 | 55 | BY OTHER | BY OTHER | Pump/ Diaphragm | |
| DP-004 | Back-up pump | Diaphragm pump | N/A | 1:1:1 | 22 | 316SS/F46 | L | RF | 001 | N/A | N/A | 1.5 | 55 | BY OTHER | BY OTHER | Pump/ Diaphragm Back-up pump no flow at normal condition | |
| BE-001 | $H_2SO_4$ Diluter | Tank | 4 m³ | 2.55:1.5: 1.5 | 416 | 316SS | L | RF | 001 | -0.2 | 30 | 0.5 | 55 | BY OTHER | BY OTHER | | |
| DP-005A | Sulfuric aicd pump | Diaphragm pump | 120.1 m³/h | 1:1:1 | 150 | 316SS/F46 | L | RF | 001 | -0.47 | 30 | 1 | 55 | BY OTHER | BY OTHER | | |
| DP-006A | Back-up pump | Diaphragm pump | N/A | 1:1:1 | 150 | 316SS/F46 | L | RF | 001 | N/A | N/A | 1 | 55 | BY OTHER | BY OTHER | Back-up pump no flow at normal condition | |
| HE-005B | Sulfuric acid heat exchanger | S&T Heat exchanger | 227 KW | 1: 4: 1 | TBA | CS/316SS | L | RF | 001 | 0.8/0.8 | 30/30 | 1.0/1.0 | 55/55 | BY OTHER | BY OTHER | Shell/Tube | |
| P-017 | Process water pump | Centrifugal pump | 8.6 m³/h | 1: 0.5: 0.5 | 20 | 304SS | L | RF | 001 | 0.5 | 5 | 1 | 30 | BY OTHER | BY OTHER | | |
| P-018 | Back-up pump | Centrifugal pump | N/A | 1: 0.5: 0.5 | 20 | 304SS | L | RF | 001 | N/A | N/A | 1 | 30 | BY OTHER | BY OTHER | Back-up pump no flow at normal condition | |
| P-021B | Cooling water pump | Centrifugal pump | 98.0 m³/h | 1:1:1 | 120 | 304SS | L | RF | 001 | 0.8 | 25 | 1 | 50 | BY OTHER | BY OTHER | | |
| P-022B | Back-up pump | Centrifugal pump | N/A | 1:1:1 | 120 | 304SS | L | RF | 001 | N/A | N/A | 1 | 50 | BY OTHER | BY OTHER | Back-up pump no flow at normal condition | |
| P-019 | Coolant pump | Centrifugal pump | 20.0 m³/h | 1: 0.5: 0.5 | 45 | 304SS | L | RF | 001 | -0.99 | 35 | 1.5 | 60 | BY OTHER | BY OTHER | | |
| P-020 | Back-up pump | Centrifugal pump | N/A | 1: 0.5: 0.5 | 45 | 304SS | L | RF | 001 | N/A | N/A | 1.5 | 60 | BY OTHER | BY OTHER | Back-up pump no flow at normal condition | |
| P-013 | Cooling water pump | Centrifugal pump | 356.4 m³/h | 1:1:1 | 300 | 304SS | L | RF | 001 | -0.4 | 25 | 1 | 50 | BY OTHER | BY OTHER | | |
| P-014 | Back-up pump | Centrifugal pump | N/A | 1:1:1 | 300 | 304SS | L | RF | 001 | N/A | N/A | 1 | 50 | BY OTHER | BY OTHER | Back-up pump no flow at normal condition | |
| B-001 | Air blower | Blower | 80066.8 m³/h | 3.6:3.3:3.3 | 800 | 304SS | V | RTJ | 001 | 9 | 25 | 10 | 50 | BY OTHER | BY OTHER | | |
| B-002 | Back-up Blower | Blower | N/A | 3.6:3.3:3.3 | 800 | 304SS | V | RTJ | 001 | N/A | N/A | 10 | 50 | BY OTHER | BY OTHER | Back-up blower no flow at normal condition | |
| B-004 | Waste gas blower | Blower | 48277.9 m³/h | 1.8:1.65:1.65 | 420 | 304SS | V | RTJ | 001 | 9 | 38 | 10 | 65 | BY OTHER | BY OTHER | | |
| B-005 | Back-up Blower | Blower | N/A | 1.8:1.65:1.65 | 420 | 304SS | V | RTJ | 001 | 9 | 38 | 10 | 63 | BY OTHER | BY OTHER | Back-up blower no flow at normal condition | |
| FN-001 | Flue gas fan | Fan | 212500.0 m³/h | 5: 5.5: 4 | 120 | 304SS | V | RF | 001 | -0.7 | 153 | -0.35 | 178 | BY OTHER | BY OTHER | | |
| HE-001 | Natural gas heat exchange | S&T Heat Exchanger | 366 KW | 0.5: 4:0.5 | TBA | CS/316SS | V | RF | 001 | 0.75/1.5 | -95/25 | 1/56.5 | -70/50 | BY OTHER | BY OTHER | Shell/Tube | |
| TB-001 | Natural gas expansion | Turbine | 276KW | 1.5:0.8:0.8 | TBA | CS/316SS | LV | RF | 001 | 0.5 | -146 | 0.85 | -121 | BY OTHER | BY OTHER | | |
| FC-001 | Natural gas purification | Column | 3 m³ | 3.2:1:1 | TBA | 316SS/304SS | LV | RF | 001 | 0.5 | -146 | 0.85 | -121 | BY OTHER | BY OTHER | | |
| F-001 | Reactants pre-heater | Furnace | 21000 KW | 10.5:4.5:6 | TBA | RCI-1Mo/CS/CS/CS | V | RF/RF/RF/RTJ | 001 | -0.5 | 15/25 | 1 | 15/50 | BY OTHER | BY OTHER | Stack/Wall/Floor/Convection section | |
| R-001 | Main reactor | Horizontal vessel | 36 m³ | 6.5:4.8:4.8 | TBA | 316SS | V | TJ/RTJ/RF/RF | 001 | -0.05 | 1100 | 0.5 | 1150 | BY OTHER | BY OTHER | RF BETWEEN R-001 & WH-001 | |
| WH-001 | Waste heat boiler | Boiler | 3.49E+07 W | 5.3:5.1:2.5 | TBA | 316SS | LV | RTJ | 001 | 1.15/0.15 | 215/1300 | 1.5/0.5 | 240/1325 | BY OTHER | BY OTHER | | |
| HE-003A | Vapor Heat exchange | S&T Heat Exchanger | 3620 KW | 2.8:4:2.8 | TBA | CS/316SS | LV | RF/RTJ | 001 | 0.8/0.4 | 40/215 | 0/-0.5 | 65/235 | BY OTHER | BY OTHER | Shell/Tube | |
| A-001 | $NH_3$ absorber | Absorber | 93 m³ | 10.4:3.3:3.3 | TBA | 304SS | LV | RF/RTJ | 001 | 2 | 80 | 2.5 | 105 | BY OTHER | BY OTHER | | |
| DP-005B | AMS Solution circulation diaphragm pump | Diaphragm pump | 88.1 m³/h | 1:1:1 | 55 | 316SS/F46 | L | RF | 001 | 0.32 | 77 | 0.7 | 102 | BY OTHER | BY OTHER | Pump/ Diaphragm | |
| DP-006B | Back-up pump | Diaphragm pump | N/A | 1:1:1 | 55 | 316SS/F46 | L | RF | 001 | N/A | N/A | 0.7 | 102 | BY OTHER | BY OTHER | Pump/ Diaphragm Back-up pump no flow at normal condition | |
| DP-007 | AMS Solution diaphragm pump | Diaphragm pump | 11.1 m³/h | 1: 0.5: 0.5 | 20 | 316SS/F46 | L | RF | 001 | 0.1 | 75 | 0.5 | 100 | BY OTHER | BY OTHER | Pump/ Diaphragm | |
| DP-008 | Back-up pump | Diaphragm pump | N/A | 1: 0.5: 0.5 | 20 | 316SS/F46 | L | RF | 001 | N/A | N/A | 0.5 | 100 | BY OTHER | BY OTHER | Pump/ Diaphragm Back-up pump no flow at normal condition | |
| HE-005A (A-001) | AMS & sulfate acid solution heat exchang | S&T Heat Exchanger | 171 KW | 0.5:4:0.5 | TBA | CS/316SS | LV | RF | 001 | 0.8/0.4 | 70/80 | 1.0/0.5 | 95/105 | BY OTHER | BY OTHER | Shell/Tube | |
| HE-006A | HCN heat exchange | S&T Heat Exchanger | 128KW | 0.5:4:0.5 | TBA | CS/316SS | LV | RF/RTJ | 001 | 0.65/0.15 | 5/30 | 1.0/0.5 | 30/55 | BY OTHER | BY OTHER | Shell/Tube | |
| MT-002 | pH adjuster | Tank | 5 m³ | 2.25:1.85:1.85 | TBA | 316SS | LV | RF/RTJ | 001 | 0.2 | 75 | 0.55 | 100 | BY OTHER | BY OTHER | | |
| A-002 | HCN absorber | Absorber | 71 m³ | 14.1:2.4:2.4 | TBA | 304SS | LV | RF/RTJ | 001 | 2 | 40 | 2.5 | 65 | BY OTHER | BY OTHER | Pump/ Diaphragm | |
| DP-009 | AMS Solution diaphragm pump | Diaphragm pump | 11.2 m³/h | 1: 0.5: 0.5 | 30 | 316SS/F46 | L | RF | 001 | -0.82 | 78 | 1 | 103 | BY OTHER | BY OTHER | Pump/ Diaphragm | |
| DP-010 | Back-up pump | Diaphragm pump | N/A | 1: 0.5: 0.5 | 30 | 316SS/F46 | L | RF | 001 | N/A | N/A | 1 | 103 | BY OTHER | BY OTHER | Pump/ Diaphragm Back-up pump no flow at normal condition | |
| DP-013 | HCN solution circulation diaphragm pump | Diaphragm pump | 166.6 m³/h | 1:1:1 | 215 | 316SS/F46 | L | RF | 001 | 0.36 | 35 | 1 | 60 | BY OTHER | BY OTHER | Pump/ Diaphragm | |
| DP-014 | Back-up pump | Diaphragm pump | N/A | 1:1:1 | 215 | 316SS/F46 | L | RF | 001 | N/A | N/A | 1 | 60 | BY OTHER | BY OTHER | Pump/ Diaphragm Back-up pump no flow at normal condition | |
| HE-004 | HCN Solution Heat exchange | S&T Heat exchanger | 5659 KW | 1.5 :4 :1.5 | TBA | CS/316SS | L | RF | 001 | 0.8/0.4 | 35/50 | 1.0/0.5 | 60/75 | BY OTHER | BY OTHER | Shell/Tube | |
| M-001 | Process water mixer | Mixer | 6 m³ | 2.2:1.8:1.8 | TBA | CS/316SS | L | RF | 001 | -0.27 | 53 | 0.1 | 78 | BY OTHER | BY OTHER | | |
| DP-011 | HCN Solution diaphragm pump | Diaphragm pump | 20.8 m³/h | 1:1:1 | 50 | 316SS/F46 | L | RF | 001 | 0.98 | 50 | 1.5 | 75 | BY OTHER | BY OTHER | Pump/ Diaphragm | |
| DP-012 | Back-up pump | Diaphragm pump | N/A | 1:1:1 | 50 | 316SS/F46 | L | RF | 001 | N/A | N/A | 1.5 | 75 | BY OTHER | BY OTHER | Pump/ Diaphragm Back-up pump no flow at normal condition | |
| MT-001 | Coolant mixing tank | Tank | 60m3 | 4.8:4:4 | TBA | 304SS | L | RF | 001 | 0.5 | 25 | 1 | 50 | BY OTHER | BY OTHER | | |
| P-001 | Coolant Pumping | Centrifugal pump | 213.8 m³/h | 1:1:1 | 255 | 304SS | L | RF | 001 | 0.39 | 25 | 1 | 50 | BY OTHER | BY OTHER | | |
| P-002 | Back-up pump | Centrifugal pump | N/A | 1:1:1 | 255 | 304SS | L | RF | 001 | N/A | N/A | 1 | 50 | BY OTHER | BY OTHER | Back-up pump no flow at normal condition | |
| BL-001 | $NH_3$ vaporizer | Boiler | 1991 KW | 1.5: 4: 1.5 | TBA | CS/316SS | LV | RTJ | 001 | 1.7/0.8 | -15/25 | 2.0/1.0 | 10/50 | BY OTHER | BY OTHER | Shell/ Tube | |
| HE-002 | Natural gas heat exchange | S&T Heat Exchanger | 148 KW | 0.5 :4:0.5 | TBA | CS/316SS | LV | RF | 001 | 0.8/0.8 | 25/0 | 0.0/0.0 | 50/25 | BY OTHER | BY OTHER | Shell/ Tube | |
| HE-003B | Natural gas heat exchange | S&T Heat Exchanger | 134 KW | 0.5 : 4: 0.5 | TBA | CS/316SS | L | RF | 001 | 0.8/0.8 | 0/25 | 1.0/1.0 | 0/50 | BY OTHER | BY OTHER | Shell/ Tube | |
| P-003 | Coolant pump | Centrifugal pump | 231.8 m³/h | 1:1:1 | 280 | 304SS | L | RF | 001 | 0.6 | 25 | 1 | 50 | BY OTHER | BY OTHER | | |
| P-004 | Back-up pump | Centrifugal pump | N/A | 1:1:1 | 280 | 304SS | L | RF | 001 | N/A | N/A | 1 | 50 | BY OTHER | BY OTHER | Back-up pump no flow at normal condition | |
| CM-001 | Coolant compressor | Compressor | 367KW | 2:0.5:1.5 | TBA | CS/316SS | L | RTJ | 001 | 29 | 24/77 | 32 | 49/102 | BY OTHER | BY OTHER | Inlet/Outlet | |
| B-003 | Air blower | Blower | 44186.8 m³/h | 1.8:1.65:1.65 | 420 | 304SS | V | RTJ | 001 | 2 | 25 | 2.5 | 50 | BY OTHER | BY OTHER | | |
| AC-001 | Air-cooler Condenser | Condenser | 8708 KW | 4:6:4 | TBA | CS/Aluminum | L | RF | 001 | 0.5 | 30/77 | 0.5 | 0/200 | BY OTHER | BY OTHER | Finned Tube | |
| HE-007A | HCN solution heat exchange | S&T Heat Exchanger | 569 KW | 1 : 4: 1 | TBA | CS/316SS | L | RF | 001 | 2.5/3 | 80/135 | 3.0/3.5 | 105/160 | BY OTHER | BY OTHER | Shell/Tube | |
| CN-001 | Exhaust gas chimney | Chimney | 17000 m³/h | 30:1.6:1.5 | TBA | Brick/Concrete | V | RF | 001 | -0.2 | 120 | 0.5 | 145 | BY OTHER | BY OTHER | | |
| P-039 | Coolant pump | Centrifugal pump | 185.5 m³/h | 1:1:1 | 225 | 304SS | L | RF | 001 | -0.38 | -20 | 1 | 5 | BY OTHER | BY OTHER | | |
| P-040 | Back-up pump | Centrifugal pump | N/A | 1:1:1 | 225 | 304SS | L | RF | 001 | N/A | N/A | 1 | 5 | BY OTHER | BY OTHER | Back-up pump no flow at normal condition | |
| DC-001 | HCN distillation column | Column | 25 m³ | 14.5:1.4:1.4 | 3254.8 | 304SS | LV | RF | 001 | 1.5 | 180 | 1.9 | 205 | BY OTHER | BY OTHER | | |
| P-027 | HCN solution pump | Centrifugal pump | 13.8m³/h | 1: 0.5: 0.5 | 30 | 316SS | L | RF | 001 | 0.8 | 108 | 1.5 | 135 | BY OTHER | BY OTHER | | |
| P-028 | Back-up pump | Centrifugal pump | N/A | 1: 0.5: 0.5 | 30 | 316SS | L | RF | 001 | N/A | N/A | 1.5 | 135 | BY OTHER | BY OTHER | Back-up pump no flow at normal condition | |
| BL-002 | Reboiler | Boiler | 6886 KW | 1: 4: 1 | TBA | CS/316SS | LV | RF | 001 | 2.6/19.5 | 148/215 | 3.0/21.5 | 165/240 | BY OTHER | BY OTHER | Shell/Tube | |
| P-029 | cooling steam pump | Centrifugal pump | 9.5 m³/h | 1:0.5:0.5 | 20 | 316SS | L | RF | 001 | 1.8 | 99 | 2 | 125 | BY OTHER | BY OTHER | | |
| P-030 | Back-up pump | Centrifugal pump | N/A | 1:0.5:0.5 | 20 | 316SS | L | RF | 001 | N/A | N/A | 2 | 125 | BY OTHER | BY OTHER | Back-up pump no flow at normal condition | |
| C-001 | HCN Condenser | Condenser | 6180 KW | 1.5 : 4: 1.5 | TBA | CS/316SS | L | RF | 001 | 0.65/0.15 | 20/30 | 1.0/0.5 | 45/55 | BY OTHER | BY OTHER | Shell/Tube | |
| P-025 | HCN pump | Centrifugal pump | 29.9 m³/h | 1:1:1 | 60 | 316SS | L | RF | 001 | 0.5 | 25 | 1 | 50 | BY OTHER | BY OTHER | | |
| P-026 | Back-up pump | Centrifugal pump | N/A | 1:1:1 | 60 | 316SS | L | RF | 001 | N/A | N/A | 1 | 50 | BY OTHER | BY OTHER | Back-up pump no flow at normal condition | |
| V-001 | Condensate storage tank | Vessel | 3 m³ | 1.45:1.45:1.45 | TBA | 316SS | L | RF | 001 | 0.1 | 26 | 0.5 | 51 | BY OTHER | BY OTHER | | |
| HE-006B | HCN heat exchange | S&T Heat Exchanger | 784 KW | 0.5: 4: 0.5 | TBA | CS/316SS | L | RF | 001 | 0.65/0.15 | 20/75 | 1.0/0.5 | 45/100 | BY OTHER | BY OTHER | Shell/Tube | |
| P-031 | Hydrogen peroxide pump | Centrifugal pump | 0.5 m³/h | 1:0.5:0.5 | 4 | 316SS | L | RF | 001 | 7.3 | 25 | 8 | 50 | BY OTHER | BY OTHER | | |
| P-032 | Back-up pump | Centrifugal pump | N/A | 1:0.5:0.5 | 4 | 316SS | L | RF | 001 | N/A | N/A | 8 | 50 | BY OTHER | BY OTHER | Back-up pump no flow at normal condition | |
| P-037 | Waste water pump | Centrifugal pump | 8.2 m³/h | 1:0.5:0.5 | 20 | 316SS | L | RF | 001 | 0.05 | 76 | 0.5 | 100 | BY OTHER | BY OTHER | | |
| P-038 | Back-up pump | Centrifugal pump | N/A | 1:0.5:0.5 | 20 | 316SS | L | RF | 001 | N/A | N/A | 0.5 | 100 | BY OTHER | BY OTHER | Back-up pump no flow at normal condition | |
| MT-003 | Wastewater reactor | Tank | 12 m³ | 4.6:2:2 | TBA | 316SS | L | RF | 001 | 0.5 | 25 | 0.85 | 50 | BY OTHER | BY OTHER | | |
| P-033 | Treated wastewater pump | Centrifugal pump | 23.7 m³/h | 1:0.5:0.5 | 50 | 304SS | L | RF | 001 | -0.23 | 25 | 1 | 50 | BY OTHER | BY OTHER | | |
| P-034 | Back-up pump | Centrifugal pump | N/A | 1:0.5:0.5 | 50 | 304SS | L | RF | 001 | N/A | N/A | 1 | 50 | BY OTHER | BY OTHER | Back-up pump no flow at normal condition | |
| B-006 | Air blower | Blower | 15561.3 m³/h | 1:0.85:0.85 | 281 | 304SS | V | RTJ | 001 | 9 | 25 | 10 | 50 | BY OTHER | BY OTHER | | |
| EV-001 | AMS Crystallizer | Vertical vessel | 28 m³ | 4.5:2.9:2.9 | 471.6 | 316SS | LS | RF | 001 | -0.2 | 80 | 0 | 105 | BY OTHER | BY OTHER | Shell/Tube | |
| FN-002 | Vapor fan | Fan | 22.5 m³/h | 3: 1.5: 2 | 90 | 304SS | V | RF | 001 | 0 | 76 | 1 | 100 | BY OTHER | BY OTHER | | |
| HE-007B | Air heat exchange | S&T Heat Exchanger | 5255 KW | 2 : 3.5 : 2 | TBA | CS/316SS | V | RTJ | 001 | 0.2 | 75 | 0.5 | 100 | BY OTHER | BY OTHER | Shell/Tube | |
| SP-001 | AMS Screw pump | Screw pump | 10.2 m³/h | 1:1:1 | 70 | 304SS | LS | RF | 001 | -0.45 | 80 | 1 | 105 | BY OTHER | BY OTHER | | |
| P-035 | Cooling water pump | Centrifugal pump | 12.9 m³/h | 1: 0.5: 0.5 | 30 | 304SS | L | RF | 001 | 0.18 | 25 | 0.5 | 50 | BY OTHER | BY OTHER | | |
| P-036 | Back-up pump | Centrifugal pump | N/A | 1: 0.5: 0.5 | 30 | 304SS | L | RF | 001 | N/A | N/A | 0.5 | 50 | BY OTHER | BY OTHER | Back-up pump no flow at normal condition | |
| DP-015 | AMS diaphragm pump | Diaphragm pump | 8.6 m³/h | 1: 0.5: 0.5 | 20 | 316SS/F46 | LS | RF | 001 | -0.62 | 80 | 1 | 105 | BY OTHER | BY OTHER | | |
| DP-016 | Back-up diaphragm pump | Diaphragm pump | N/A | 1: 0.5: 0.5 | 20 | 316SS/F46 | LS | RF | 001 | N/A | N/A | 1 | 105 | BY OTHER | BY OTHER | Back-up pump no flow in the operating | |
| HE-008 | AMS solution heat exchange | S&T Heat Exchanger | 836 KW | 1:4:1 | TBA | CS/316SS | LS | RF/RTJ | 001 | 0.1/19 | 80/215 | 0.2/21.0 | 105/240 | BY OTHER | BY OTHER | Shell/Tube | |
| HE-009 | AMS solution heat exchange | S&T Heat Exchanger | 322 KW | 0.5:4:0.5 | TBA | CS/316SS | LS | RF/RF | 001 | 0.8/0.4 | 45/80 | 1.0 /0.5 | 70/105 | BY OTHER | BY OTHER | Shell/Tube | |
| SP-002 | AMS Screw pump | Screw pump | 10.2 m³/h | 1:1:1 | 70 | 304SS | LS | RF | 001 | -0.85 | 50 | 1.5 | 75 | BY OTHER | BY OTHER | | |
| CT-001 | AMS centrifuge | Operator | 15 KW | 1.55:2.7:1.55 | 1832 | 316SS | LS | RF | 001 | -0.2 | 80 | 0 | 105 | BY OTHER | BY OTHER | | |
| CY-001 | AMS Conveyor | Conveyor | 3589 kg/hr | 19.3 | TBA | CS/PVC | LS | RF | 001 | 0 | 50 | 0.1 | 75 | BY OTHER | BY OTHER | construction/conveyor belt dimensions only consider length | |
| D-001 | AMS Dryer | Horizontal vessel | 3 m³ | 0.75:7.5:0.75 | 5000 | 304SS | VS | RF/RTJ | 001 | 0 | 75 | 0.1 | 100 | BY OTHER | BY OTHER | | |
| CY-002 | AMS Conveyor | Conveyor | 2441 kg/hr | 100 | TBA | CS/PVC | S | RF | 001 | 0 | 75 | 0.1 | 100 | BY OTHER | BY OTHER | construction/conveyor belt dimensions only consider length | |

# 6. Rest equipment

## 6.1 BL-001

| | | | | |
|---|---|---|---|---|
| 1+A | CLIENT: | Lucite | CALCULATION SHEET | |
| 2 | LOCATION: | Cassel Works, Billingham TS23 1LE | | |
| 3 | SUBJECT: | Blower | | |
| 4 | PROJECT: | Hydrogen Cyanide and AMS Plant Replacement | DOCUMENT NO.: | BL-001 |
| 5 | JOB NO.: | 2022-001 | EQUIPMENT ITEM NO.: | BL-001 |
| 6 | Rev. | | GROUP NO.: | Group 6 |

| | | | | |
|---|---|---|---|---|
| 7 | | | | |
| 8 | | **Calculation process for BL-001** | | |
| 9 | | Description: | | |
| 10 | | | | |
| 11 | coolant 48 49 | Tube side: | 1.5 | bar |
| 12 | | Mass flow rate of tube side flow | 255200 | kg/h |
| 13 | | The spesified flow velocity | 2.5 | m/s |
| 14 | | Mass heat capacity | 4 | kJ/kg-C |
| 15 | | Inlet temperature | 24.07 | C |
| 16 | | Target outlet temperature | 17.47 | C |
| 17 | | Total heat tranferred Q=CmdT | 6737280 | kJ |
| 18 | | Desity | 1040 | kg/m3 |
| 19 | NH3 20 21 | Shell side: | 2.5 | bar |
| 20 | | Mass flow rate of shell side flow | 5034 | kg/h |
| 21 | | The spesified flow velocity | 3.5 | m/s |
| 22 | | Mass heat capacity | 3.265 | kJ/kg-C |
| 23 | | Inlet temperature | -25 | C |
| 24 | | Letant heat of the cooling flow | 1263 | kJ/kg |
| 25 | 0.027264957 | Heat transferred due to latant heat | 6359627.38 | kJ |
| 26 | | density | 663.5 | kg/m3 |
| 27 | | Outlet temperature | 0.00 | C |
| 28 | | Q total | 6737280 | kJ |
| 29 | | LMTD $dT_{lm}$ | 13.82 | C |
| 30 | | FT | 1 | |
| 31 | | MTD $dT_m$ | 13.82 | C |
| 32 | | $Q=UA(dT_m)$ | | |
| 33 | | UA | 487649.52 | kJ/C-h |
| 34 | | | 135458.20 | $W/m^2{}^\circ C$ |
| 35 | For this heat exchanger | The convection coefficient of inner fluid $h_i$ | 3200 | $W/m^2{}^\circ C$ |
| 36 | | The convection coefficient of outer fluid $h_o$ | 1200 | $W/m^2{}^\circ C$ |
| 37 | | The overall heat transfer coefficient U $\frac{1}{U} \approx \frac{1}{h_i} + \frac{1}{h_o}$ | 873 | $W/m^2{}^\circ C$ |
| 38 | | | | |
| 39 | | The heat exchange area A | 155.21 | $m^2$ |
| 40 | | The specified tube length | 3.5 | m |
| 41 | | Inner diameter of tube | 18.458 | mm |
| 42 | | The minimum thickness of tube wall $t = \frac{PD}{2\sigma}$ | 0.0081 | mm |
| 43 | | | | |
| 44 | | Yield strength | 170 | Mpa |
| 45 | | Tube OD | 19 | mm |
| 46 | | Tube thickness | 0.271 | mm |
| 47 | | The cross section area of one tube | 0.000267 | $m^2$ |
| 48 | | Number of tubes | 742.96 | |
| 49 | | Number of tubes designed | 743 | |
| 50 | | Totall cross section area of tubes | 0.1988 | $m^2$ |
| 51 | | Pitch (60) | 23.75 | mm |
| 52 | | Area for one pipe | 879.29 | $mm^2$ |
| 53 | | Total area for the shell | 1.3066 | $m^2$ |
| 54 | | | | |
| 55 | | | | |
| 56 | | | | |
| 57 | | | | |
| 58 | | | | |
| 59 | | | | |
| 60 | | | | |
| 61 | | | | |

| | | | | | | | |
|---|---|---|---|---|---|---|---|
| 62 | REV. | DESCRIPTION | DATE | BY | CHECK | APPROVED | DOCUMENT NO. |
| 63 | | | | | | | |
| 64 | | SEE PAGE 1 | | | | | BL-001 |
| 65 | | | | | | | |
| 66 | | | | | | | PAGE 2 OF |

| | | |
|---|---|---|
| The diameter of the heat exchanger | 1.29 | m |
| The diameter of the heat exchanger designed | 1.5 | m |
| | | |
| Length of tube pipes | 3.5 | m |
| heat transfer area | 155.220 | m2 |
| | | |
| length of tube channel | 0.23 | m |
| Total length of heat exchanger | 3.97 | m |
| | | |
| Pressure drop for HE-006 | | |
| | | |
| | | |
| | | |
| For tube side | | |
| viscosity | 2.6 | cp |
| | 0.0026 | Pa.s |
| Re | 18458.00 | |
| | | |
| Relative roughness ε/D | 0.00249214 | |
| From the Moody's chart f | 0.026 | |
| pressure drop $\Delta P = f \times \frac{L}{D} \times \frac{\rho v^2}{2}$ | 16022.86 | Pa |
| | 0.1602 | bar |
| For shell side | | |
| viscosity | 0.910 | cp |
| | 0.000910 | Pa.s |
| Velocity | 0.00119 | m/s |
| Re | 1304.99 | |
| f | 0.065 | |
| pressure drop | 616.36 | Pa |
| | 0.0062 | bar |

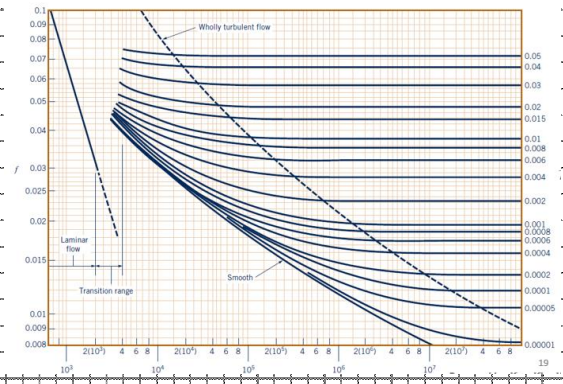


| REV. | DESCRIPTION | DATE | BY | CHECK | APPROVED | DOCUMENT NO. |
|---|---|---|---|---|---|---|
| | | | | | | 0 |
| | | | | | | PAGE 1 OF |

SEE PAGE 1

The University of Nottingham

UNITED KINGDOM · CHINA · MALAYSIA

## 6.2 BL-002

| | | | |
|---|---|---|---|
| CLIENT: | Lucite | | |
| LOCATION: | Cassel Works, Billingham TS23 1LE | | |
| SUBJECT: | AMS heat exchange | | |
| PROJECT: | Hydrogen Cyanide and AMS Plant Replacement | | |
| JOB NO.: | 2022-001 | | |
| Rev. | | | |

The University of Nottingham

UNITED KINGDOM · CHINA · MALAYSIA

**CALCULATION SHEET**

DOCUMENT NO.: BL-002

EQUIPMENT ITEM NO.: BL-002

GROUP NO.: Group 6

| | | | |
|---|---|---|---|
| | **Calculation process for BL-002** | | |
| | Description: Reboiler | | |
| | Tube side: | 20 | bar |
| | Mass flow rate of tube side flow | 9529.2 | kg/h |
| | The spesified flow velocity | 10 | m/s |
| | Mass heat capacity | 3.45 | kJ/kg-C |
| | Inlet temperature | 212.8 | C |
| | Target outlet temperature | 99.5 | C |
| | Total heat tranferred Q=CmdT | 3724821.34 | kJ |
| | Desity | 8.925 | kg/m3 |
| | Shell side: | 3.5 | bar |
| | Mass flow rate of shell side flow | 13795.1 | kg/h |
| 0.029658263 | The spesified flow velocity | 2.5 | m/s |
| | Mass heat capacity | 4.416 | kJ/kg-C |
| | Inlet temperature | 107.9 | C |
| | Letant heat of the steam | 1859 | kJ/kg |
| | Heat transferred due to latant heat | 17710018.2 | kJ |
| | density | 938.9 | kg/m3 |
| | Outlet temperature | 135.8 | C |
| | Q total | 21434839.5 | kJ |
| | LMTD $dT_{lm}$ | 60.94 | C |
| | FT | 1 | |
| | MTD $dT_m$ | 60.94 | C |
| | $Q=UA(dT_m)$ | | |
| | UA | 351745.34 | kJ/C-h |
| | | 97707.04 | $W/m^2C$ |
| For this heat exchanger | The convection coefficient of inner fluid $h_i$ | 3500 | $W/m^2C$ |
| | The convection coefficient of outer fluid $h_o$ | 4000 | $W/m^2C$ |
| | The overall heat transfer coefficient U $\frac{1}{U} \approx \frac{1}{h_i} + \frac{1}{h_o}$ | 1867 | $W/m^2C$ |
| | The heat exchange area A | 52.34 | $m^2$ |
| | The specified tube length | 3.5 | m |
| | Inner diameter of tube | 18.2 | mm |
| | The minimum thickness of tube wall $t = \frac{PD}{2\sigma}$ | 0.1118 | mm |
| | Yield strength | 170 | Mpa |
| | Tube OD | 19 | mm |
| | Tube thickness | 0.404 | mm |
| | The cross section area of one tube | 0.000260 | $m^2$ |
| | Number of tubes | 250.55 | |
| | Number of tubes designed | 251 | |
| | Totall cross section area of tubes | 0.0652 | $m^2$ |
| | Pitch (60) | 23.75 | mm |
| | Area for one pipe | 879.29 | $mm^2$ |
| | Total area for the shell | 0.4414 | $m^2$ |

| REV. | DESCRIPTION | DATE | BY | CHECK | APPROVED | DOCUMENT NO. |
|---|---|---|---|---|---|---|
| | | | | | | BL-002 |
| | | | | | | PAGE 2 OF |

SEE PAGE 1

| | | |
|---|---|---|
| The diameter of the heat exchanger | 0.75 | m |
| The diameter of the heat exchanger designed | 1 | m |
| | | |
| Length of tube pipes | 3.5 | m |
| heat transfer area | 52.436 | m2 |
| | | |
| length of tube channel | 0.23 | m |
| Total length of heat exchanger | 3.97 | m |
| | | |
| Pressure drop for HE-008 | | |
| | | |
| | | |
| For tube side | | |
| viscosity | 0.016 | cp |
| | 0.000016 | Pa.s |
| Re | 101477.25 | |
| | | |
| Relative roughness ε/D | 0.00252858 | |
| From the Moody's chart f | 0.027 | |
| pressure drop $\Delta P = f \times \frac{L}{D} \times \frac{\rho v^2}{2}$ | 2318.09 | Pa |
| | 0.0232 | bar |
| For shell side | | |
| viscosity | 0.733 | cp |
| | 0.000733 | Pa.s |
| Velocity | 0.00520 | m/s |
| Re | 6655.98 | |
| f | 0.038 | |
| pressure drop | 390.23 | Pa |
| | 0.0039 | bar |

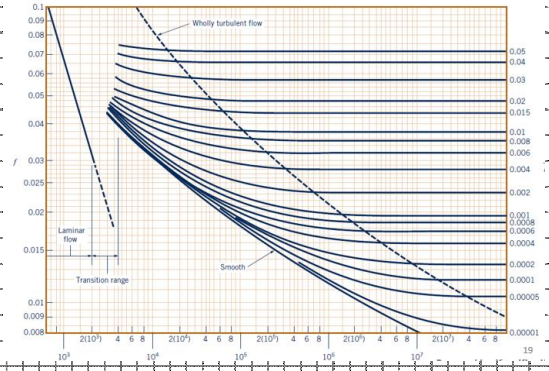


| REV. | DESCRIPTION | DATE | BY | CHECK | APPROVED | DOCUMENT NO. |
|---|---|---|---|---|---|---|
| | | | | | | 0 |
| | | | | | | PAGE 1 OF |

SEE PAGE 1

The University of Nottingham

UNITED KINGDOM · CHINA · MALAYSIA

## 6.3 C-001

| | | | |
|---|---|---|---|
| CLIENT: | Lucite | CALCULATION SHEET | |
| LOCATION: | Cassel Works, Billingham TS23 1LE | | |
| SUBJECT: | AMS heat exchange | | |
| PROJECT: | Hydrogen Cyanide and AMS Plant Replacement | DOCUMENT NO.: | C-001 |
| JOB NO.: | 2022-001 | EQUIPMENT ITEM NO.: | C-001 |
| Rev. | | GROUP NO.: | Group 6 |

| | | | |
|---|---|---|---|
| | **Calculation process for C-001** | | |
| | Description: Condenser | | |
| | Tube side: | 1 | bar |
| | Mass flow rate of tube side flow | 20603 | kg/h |
| | The spesified flow velocity | 14 | m/s |
| | Mass heat capacity | 1.368 | kJ/kg-C |
| | Inlet temperature | 27 | C |
| | Target outlet temperature | 25.69 | C |
| | Total heat tranferred Q=CmdT | 36922.2242 | kJ |
| | Desity | 1.128 | kg/m3 |
| | Shell side: | 1.5 | bar |
| | Mass flow rate of shell side flow | 179344 | kg/h |
| | The spesified flow velocity | 2.5 | m/s |
| | Mass heat capacity | 3.265 | kJ/kg-C |
| | Inlet temperature | -20 | C |
| | Letant heat of the cooling flow | 933 | kJ/kg |
| 0.362402201 | Heat transferred due to latant heat | 19229466.7 | kJ |
| | density | 1040 | kg/m3 |
| | Outlet temperature | 20 | C |
| | Q total | 19266388.9 | kJ |
| | LMTD $dT_{lm}$ | 11.32 | C |
| | FT | 1 | |
| | MTD $dT_m$ | 11.32 | C |
| | $Q=UA(dT_m)$ | | |
| | UA | 1702479.67 | kJ/C-h |
| | | 472911.02 | $W/m^2C$ |
| For this heat exchanger | The convection coefficient of inner fluid $h_i$ | 3200 | $W/m^2C$ |
| | The convection coefficient of outer fluid $h_o$ | 11000 | $W/m^2C$ |
| | The overall heat transfer coefficient U $\frac{1}{U} \approx \frac{1}{h_i} + \frac{1}{h_o}$ | 2479 | $W/m^2C$ |
| | The heat exchange area A | 190.78 | $m^2$ |
| | The specified tube length | 3.5 | m |
| | Inner diameter of tube | 18.458 | mm |
| | The minimum thickness of tube wall $t = \frac{PD}{2\sigma}$ | 0.0056 | mm |
| | Yield strength | 170 | Mpa |
| | Tube OD | 19 | mm |
| | Tube thickness | 0.271 | mm |
| | The cross section area of one tube | 0.000267 | $m^2$ |
| | Number of tubes | 913.20 | |
| | Number of tubes designed | 914 | |
| | Totall cross section area of tubes | 0.2446 | $m^2$ |
| | Pitch (60) | 23.75 | mm |
| | Area for one pipe | 879.29 | $mm^2$ |
| | Total area for the shell | 1.6073 | $m^2$ |

| REV. | DESCRIPTION | DATE | BY | CHECK | APPROVED | DOCUMENT NO. |
|---|---|---|---|---|---|---|
| | | | | | | C-001 |
| | | | | | | PAGE 2 OF |

SEE PAGE 1

| | | |
|---|---|---|
| The diameter of the heat exchanger | 1.43 | m |
| The diameter of the heat exchanger designed | 1.5 | m |
| | | |
| Length of tube pipes | 3.5 | m |
| heat transfer area | 190.944 | m2 |
| | | |
| length of tube channel | 0.23 | m |
| Total length of heat exchanger | 3.97 | m |
| | | |
| Pressure drop for HE-006 | | |
| | | |
| | | |
| For tube side | | |
| viscosity | 0.0053 | cp |
| | 0.0000053 | Pa.s |
| Re | 54997.87 | |
| | | |
| Relative roughness ε/D | 0.00249214 | |
| From the Moody's chart f | 0.029 | |
| pressure drop $\Delta P = f \times \frac{L}{D} \times \frac{\rho v^2}{2}$ | 607.88 | Pa |
| | 0.0061 | bar |
| For shell side | | |
| viscosity | 2.640 | cp |
| | 0.002640 | Pa.s |
| Velocity | 0.02712 | m/s |
| Re | 16025.79 | |
| f | 0.040 | |
| pressure drop | 303.33 | Pa |
| | 0.0030 | bar |

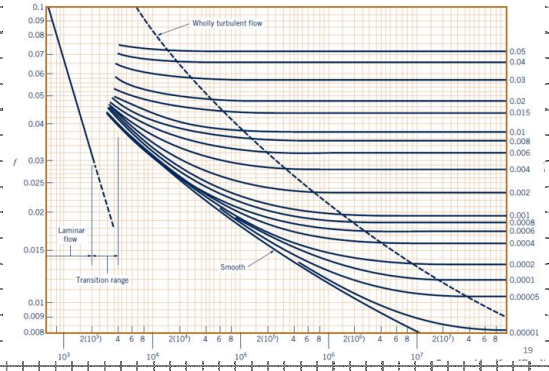


| REV. | DESCRIPTION | DATE | BY | CHECK | APPROVED | DOCUMENT NO. |
|---|---|---|---|---|---|---|
| | | | | | | 0 |
| | | | | | | PAGE 1 OF |

SEE PAGE 1

The University of Nottingham

UNITED KINGDOM · CHINA · MALAYSIA

## 6.4 AC-001

| | | | |
|---|---|---|---|
| CLIENT: | Lucite | The University of Nottingham<br>UNITED KINGDOM · CHINA · MALAYSIA | **PROCESS DATA SHEET**<br>**AIR-COOLED HEAT EXCHANGER** |
| LOCATION: | Cassel Works, Billingham TS23 1LE | | |
| SERVICE: | Air-cooler Condenser | | |
| PROJECT: | Hydrogen Cyanide and AMS Plant Replacer | | UNIT NO.: AC-001 |
| JOB NO.: | 2022-001 | | ITEM NO.: AC-001 NO. REQD.: 1 |

| Rev | | | | | | | | | | | | | |
|---|---|---|---|---|---|---|---|---|---|---|---|---|---|
| | Type of draught: | Forced | | | | | MTD, eff. °C | | | | | | 20.02 |
| | Bay size (W x L), m | 4 | x | 6 | No. bay/items | 2 | Transfer rate - finned, W/m² °C | | | | | | 1389.9 |
| | Heat Exchanged, kW | | | | | 8708.3 | Bare tube, service, W/m² °C | | | | | | 1389.9 |
| | Surface/item - finned tube, m² | | | | | 301.64 | Clean, W/m² °C | | | 1432 | | | |
| | Bare tube, m² | | | | | 301.64 | | | | | | | |
| | **Basic design data** | | | | | | | | | | | | |
| | Pressure design code | BS EN 13445-2014 | | | | | Structural design code | By others | | | | | |
| | Tube bundle code stamped | Yes | | | | | Flammable service | No | | | | | |
| | Heating coil code stamped | No | | | | | Lethal / toxic service | No | | | | | |
| | **Performance data - Tube side** | | | | | | | | | | | | |
| | Fluid name | Coolant | | | | | | In | | | Out | | |
| | Total fluid entering, kg/h | | | | | 190500 | Temperature, °C | 77.36 | | | 30 | | |
| | Dew / bubble point, °C | N/A | / | 98 | | | Total flow rate (liq. / vap.), kg/h | 2E+05 | / | N/A | 2E+05 | / | N/A |
| | Pour point / Freeze point, °C | N/A | / | -40 | | | Water / steam, kg/h | 123825 | / | N/A | 123825 | / | N/A |
| | Latent heat, kJ/kg | | | | | 2544000 | Non-condensables, kg/h | N/A | | | N/A | | |
| | Inlet pressure, barg | | | | | 30 | Mol weight (vap. / non-cond.) | 20.02 | / | N/A | 20.02 | / | N/A |
| | Pressure drop (allow. / calc.), bar | 0.7 | / | 0.5117 | | | Density (liq. / vap.), kg/m³ | 491 | / | N/A | 779 | / | N/A |
| | Velocity (allow. / calc.), m/s | 6 | / | 2.5 | | | Specific heat (liq. / vap.), kJ/kg °C | 2584 | / | N/A | 2082 | / | N/A |
| | Inside fouling resistance, m² °C/W | | | | | 0.00000022 | Viscosity (liq. / vap.), cP | 0.057 | / | N/A | 0.0957 | / | N/A |
| | **Performance data - Air side** | | | | | | | | | | | | |
| | Air inlet temp. (design dry bulb), °C | | | | | 25 | Face velocity. m/s | | | | 35 | | |
| | Air flow rate / item, m³/h | | | | | 4432130.58 | Min. design ambient temp., °C | | | | 46 | | |
| | Velocity (net free area), kg/s m² | | | | | 10 | Altitude, m | | | | 3 | | |
| | Air outlet temperature, °C | | | | | 31 | Static pressure, mbar | | | | 1013 | | |
| | Air flow rate / fan, m³/h | | | | | 4432130.58 | | | | | | | |
| | **Design, materials & construction** | | | | | | | | | | | | |
| | Design pressure, barg | | | | | 1.85 | **Heating coil (continued)** | | | | | | |
| | Test pressure, barg | | | | | 2.775 | Fin material & type | | | | | | 304SS |
| | Design temperature, °C | | | | | 56 | Thicknes, mm | | | | 0.404 | | |
| | Min. design metal temperature, °C | | | | | 46 | Pressure design code | | | | | | BS EN 13445-2014 |
| | | | | | | | Code stamp? | | | | Yes | | |
| | **Tube bundle** | | | | | | Heating Fluid | Process water | | Flow, kg/s | 39.8 | | |
| | Size (W x L), m | 4 | x | 6 | | | Temperature (in / out), °C | 45 | | | 25 | | |
| | No. / bay | 2 | No. tube rows | 2 | | | Inlet pressure, barg | | | | 1.5 | | |
| | Bundles in parallel | 2 | In series | 4 | | | Pressure drop (allow. / calc.), bar | 1 | | / | 0.677 | | |
| | Structure mounting | Pipe rack | | | | | Design pressure, barg | 1.85 | | Des. Temp. oC | 70 | | |
| | Pipe rack beams (C - C), m | | | By others | | | Nozzle | No. | SIZE | FLANGE | FLANGE | | |
| | Ladders, walkways, platforms | | | Yes | | | | | Inch NB | FINISH | RATING | | |
| | Structure surf. Prep. / coating | By others | / | By others | | | Inlet | 61 | 52" | RTJ | 150# | | |
| | Header surf. Prep. / coating | By others | / | By others | | | Outlet | 62 | 52" | RTJ | 150# | | |
| | **Louvres** | | | | | | **Header** | | | | | | |
| | Louvres required? | | | None | | | Type | | | Removable cover plate | | | |
| | Material | N/A | | | | | Material | | | 316 SS | | | |
| | Action control | N/A | | | | | Corrosion allowance, mm | | | | 1.5 | | |
| | Action type | N/A | | | | | No. of passes | | | | 1 | | |
| | | | | | | | Slope, mm/m | | | | N/A | | |
| | **Heating coil** | | | | | | Plug material | | | | N/A | | |
| | Heating coil required? | | | Yes | | | Gasket material | | | | N/A | | |
| | No. of tubes | 1011 | Tube OD, mm | 19 | | | Header (continued on next page) | | | | | | |
| | Remarks : | | | | | | | | | | | | |

| REV. | DESCRIPTION | DATE | BY | CHECK | APPROVED | DOCUMENT NO. |
|---|---|---|---|---|---|---|
| 1 | First draft | 4/24/2022 | GYA | WYK | WYK | |
| 2 | Final draft | 4/25/2022 | GYA | WYK | WYK | AC-001 |

SHEET 1 OF 2

The University of Nottingham

UNITED KINGDOM · CHINA · MALAYSIA

| | | | |
|---|---|---|---|
| CLIENT: | Lucite | | |
| LOCATION: | Cassel Works, Billingham TS23 1LE | | |
| SERVICE: | Air-cooler Condenser | | |
| PROJECT: | ydrogen Cyanide and AMS Plant Replaceme | | |
| JOB NO.: | 2022-001 | | |

The University of Nottingham

UNITED KINGDOM · CHINA · MALAYSIA

# PROCESS DATA SHEET
# AIR-COOLED HEAT EXCHANGER

| | | | |
|---|---|---|---|
| UNIT NO.: | AC-001 | | |
| ITEM NO.: | AC-001 | NO. REQD.: | 1 |

Rev

## Design, materials & construction (continued)

**Header (continued)**

| Nozzles | No. | SIZE Inch NB | FLANGE FINISH | FLANGE RATING |
|---|---|---|---|---|
| Inlet | 45 | 12" | RF | 150# |
| Outlet | 46 | 12" | RF | 150# |
| Vent | N/A | N/A | N/A | N/A |
| Drain | N/A | N/A | N/A | N/A |
| TI | N/A | N/A | N/A | N/A |
| PI | N/A | N/A | N/A | N/A |
| Chem. Clean. | N/A | N/A | N/A | N/A |

**Tubes**

| | | | |
|---|---|---|---|
| Material | 304ss | | |
| Tube OD, mm | 19 | Min. wall thick., mm | By vendor |

**Tubes (continued)**

| | | | |
|---|---|---|---|
| No. tubes/bundle | 1011 | Tube length, m | 5 |
| Tube pitch, mm | 60 | Tube pattern | N/A |
| No. tube rows | | | 2 |
| **Fins** | | | |
| Fin type | By vendor | | |
| Fin material | 304SS | | |
| Fin stock thickness, mm | | | By vendor |
| Fin selection temperature, °C | | | By others |
| Fin OD, mm | 20 | No. fins / m | 2 |
| Customer specification | By others | | |

## Mechanical equipment

**Fans**

| | | | |
|---|---|---|---|
| Manufacturer & model | By vendor | | |
| No. fans / bay | | | 1 |
| Fan diameter, m | | | 1.13 |
| Fan blade angle | | | By vendor |
| Fan pitch adjustment | | | Fixed |
| Fan blade material | | | By vendor |
| kW / fan @ des. Temp. | | | 56 |
| Max. allow. / calc. fan tip speed, m/s | 20 | / | By vendor |

**Drivers**

| | | | |
|---|---|---|---|
| Type | Electric motor | | |
| Manufacturer & model | By vendor | | |
| No. drivers / bay | | | 1 |

**Drivers (continued)**

| | | | |
|---|---|---|---|
| Speed, revs. / min | | | By vendor |
| Speed, revs. / min | | | By vendor |
| Voltage, V | | | 240 |
| Noise level (allow./calc.), dB(A) @ 1 m | 70 | / | By vendor |

**Speed reducer**

| | | | |
|---|---|---|---|
| Type | Right angle gear | | |
| Manufacturer & model | By vendor | | |
| No. / bay | | | 1 |
| Service factor | | | By others |
| Support | | | Structure |
| Vibration switch | | | Yes |
| Enclosure | | | By vendor |

## Controls air side

**Air recirculation**

| | | | |
|---|---|---|---|
| Type | External over side | | |
| Degree control of outlet process temperature: | | | |
| (max. cooling), + / - °C | | | N/A |
| Action on control signal failure: | | | |
| Fan pitch: | | | Maximum |
| Louvres: | | | Open |

| | | | |
|---|---|---|---|
| Actuator air supply: | | | |
| Fan actuator: | | | Bias relay |
| Louvre positioner: | | | Yes |

## Shipping

| | | | |
|---|---|---|---|
| Plot area (W x L), m | 0.5 | x | 1 |
| Bundle weight, kg | | | By vendor |
| Weight / bay, kg | | | By vendor |

| | | | |
|---|---|---|---|
| Weight / bay filled with water, kg | | | By vendor |
| Total weight, kg | | | By vendor |
| Shipping weight, kg | | | By vendor |

Remarks :

| REV. | DESCRIPTION | DATE | BY | CHECK | APPROVED | DOCUMENT NO. |
|---|---|---|---|---|---|---|
| 1 | First draft | 4/24/2022 | GYA | WYK | WYK | |
| 2 | Final draft | 4/25/2022 | GYA | WYK | WYK | AC-001 |

SHEET 2 OF 2

The University of Nottingham

UNITED KINGDOM · CHINA · MALAYSIA

## 6.5 F-001

| Fired-heater Datasheet | | | | | | | | | | | | |
|---|---|---|---|---|---|---|---|---|---|---|---|---|
| | | | | SI Units | | | | | | | | |
| | | | rev: | | date: | | sheet 1 of 6 | | | | | |
| Purchaser/Owner: | | | Item No.: F-001 | | | | | | | | | |
| Service: Preheat the reactants | | | Location: Plant | | | | | | | | | |
| 1 | unit: | Furnace | | | | | | | | | | |
| 2 | manufacturer: | | *number required: | | | 1 | | | rev | | | |
| | | | reference: | | | | | | | | | |
| 3 | type of heater: Ceramic fiber heater | | | | | | | | | | | |
| 4 | *total heater absorbed duty, MW: 21.28 | | Total dimentions of fired heater: 10465*4210*6000 | | | | | | | | | |
| 5 | | | Process Design Conditions | | | | | | | | | |
| 6 | *operating case | | The temperature in the fired heater is 1680 °C and the pressure is 0.7 bar | | | | | | | | | |
| 7 | heater section | | At the bottom of the fired heater which is a central burner heat exchanger soaking furnace | | | | | | | | | |
| 8 | *service | | Preheating of cold air, natural gas, ammonia and producing steam (5 bar and 20 bar) | | | | | | | | | |
| 9 | heat absorption, MW | | 0.719 | 3.75 | 0.614 | 14.344 | | | | | | |
| 10 | *fluid | | Natural gas | Air | NH3 | H2O | | | | | | |
| 11 | *flow rate, kg/s | | 0.1565 | 4.144 | 1.38 | 5.96 | | | | | | |
| 12 | *flow rate, m³/h | | 7477 | 51670 | 6552 | 21.458 | | | | | | |
| 13 | *pressure drop, allowable (clean/fouled), kPa | | 30/40 | 30/40 | 30/40 | 30/70 | | | | | | |
| 14 | pressure drop, calculated (clean/fouled), kPa | | 0.5/1.1 | 1.4/2.67 | 0.4/0.89 | 5/12.7 | | | | | | |
| 15 | *velocity limitation, m/s | | 25 | 30 | 27 | 25 | | | | | | |
| 16 | *maximum allow.(calc. inside film temperature, °C | | 2500/2300 | 2500/2300 | 2500/2300 | 240/220 | | | | | | |
| 17 | *fouling factor, m² K/W | | 0.0000022 | 0.000004 | 0.0000025 | 0.0000002 | | | | | | |
| 18 | *coking allowance, mm | | 2 | 2 | 2 | 1 | | | | | | |
| 19 | **Inlet Conditions:** | | | | | | | | | | | |
| 20 | *temperature, °C | | 0 | 25 | 0 | 98 | | | | | | |
| 21 | *pressure, kPa (gauge) | | 10 | 10 | 10 | 50 | | | | | | |
| 22 | *liquid flow rate, kg/s | | N/A | N/A | N/A | 5.96 | | | | | | |
| 23 | *vapor flow rate, kg/s | | 0.1565 | 4.144 | 1.38 | N/A | | | | | | |
| 24 | *liquid relative density (at 15 °C) | | N/A | N/A | N/A | 0.95 | | | | | | |
| 25 | *vapor relative molecular mass 1 | | 16.63 | 28.85 | 17.03 | 18.02 | | | | | | |
| 26 | *vapor density, kg/m³ | | 0.7345 | 1.271 | 0.7579 | 9.779 | | | | | | |
| 27 | *viscosity (liquid/vapor), mPa·s | | 0.01061 | 0.0176 | 0.007589 | 0.2849/0.0161 | | | | | | |
| 28 | *specific heat (liquid/vapor), kJ/kg·K | | 2.165 | 1.007 | 2.084 | 4.393/2.158 | | | | | | |
| 29 | *thermal conductivity (liquid/vapor), W/mK | | 0.02973 | 0.02409 | 0.02369 | 0.679B/0.0399 | | | | | | |
| 30 | **Outlet Conditions** | | | | | | | | | | | |
| 31 | *temperature, °C | | 700 | 700 | 700 | 215 | | | | | | |
| 32 | *pressure, kPa (gauge) | | 9.5 | 8.6 | 9.6 | 1900 | | | | | | |
| 33 | *liquid flow rate, kg/s | | N/A | N/A | N/A | N/A | | | | | | |
| 34 | *vapor flow rate, kg/s | | 0.1565 | 4.144 | 1.38 | 5.96 | | | | | | |
| 35 | *liquid relative density (at 15 °C) | | N/A | N/A | N/A | 1.015 | | | | | | |
| 36 | *vapor relative molecular mass 1 | | 16.63 | 28.85 | 17.03 | 18.02 | | | | | | |
| 37 | *vapor density, kg/m³ | | 0.2055 | 0.3565 | 0.2105 | 9.779 | | | | | | |
| 38 | *viscosity (liquid/vapor), mPa·s | | 0.02823 | 0.04712 | 0.0288 | 0.2849/0.0161 | | | | | | |
| 39 | *spec.fic heat (liquid/vapor), kJ/kg·K | | 4.187 | 1.142 | 3.25 | 4.393/2.158 | | | | | | |
| 40 | *thermal conductivity (liquid/vapor), W/mK | | 0.1564 | 0.06551 | 0.1356 | 0.679B/0.0399 | | | | | | |
| 41 | NOTE: Relative molecular mass is the SI term used for the more familiar "molecular weight." | | | | | | | | | | | |
| 42 | **Notes:** | | | | | | | | | | | |

| Fired-heater Datasheet | | | | | | | | | | | | |
|---|---|---|---|---|---|---|---|---|---|---|---|---|
| | | | | | | | | | | SI Units | | |
| | | | | | | | | rev: | | date: | | sheet 2 of 6 |
| | | | | | | Combustion Design Conditions | | | | | | |
| 1 | operating case | | | | | | | The temperature in the fired heater is 1680 °C and the pressure is 0.7 bar | | | | rev |
| 2 | *type of fuel: | | | | | | | Natural gas, HCN, CO, NO and H2 | | | | |
| 3 | *excess air, % | | | | | | | 10% | | | | |
| 4 | calculated heat release (h.l.), MW | | | | | | | 21.28 | | | | |
| 5 | fuel efficiency calculated, % (h.l.) | | | | | | | 97% | | | | |
| 6 | fuel efficiency guaranteed, % (h.l.) | | | | | | | 95% | | | | |
| 7 | radiation loss, % of heat release (h.l.) | | | | | | | 5% | | | | |
| 8 | flue gas temperature leaving: | | | 800 | radiant section, °C | | 1700 | | | | | |
| 9 | flue gas quantity, kg/s | | | | | | | 0.749 | | | | |
| 10 | draft | at arch, Pa | | | | | | 80000 | | | | |
| 11 | | at burners, Pa | | | | | | 700000 | | | | |
| 12 | *ambient air temperature, efficiency calculation, °C | | | | | | | 25 | | | | |
| 13 | *ambient air temperature, stack design, °C | | | | | | | 2300 | | | | |
| 14 | *altitude above sea level, m | | | | | | | 20 | | | | |
| 15 | volumetric heat release (h.l.), W/m³ | | | | | | | 268882.61 | | | | |
| 16 | *emission limits (dry): 20mg/m³ | | | | mg/m³ (corrected to 3 % $O_2$): 26% | | | $NO_x$: 50 | | CO: 16 | $SO_2$: 200 | |
| 17 | **Fuel Characteristics:** Higher calorific value; less particulate pollution | | | | | | | | | | | |
| 18 | *gas type Natural gas, HCN, H2,CO and NO | | | | *liquid type Deoxygenated water | | | *other type N/A | | | | |
| 19 | *$q_L$ 2909.6 | | | kJ/m³ | *$q_L$ 15570 | | kJ/kg | *$\rho$ | | | kJ/kg<br>kJ/m3 | N/A |
| 20 | *$h_H$ 37400.2 | | | kJ/m³ | *$h_H$ 2276 | | kJ/kg | *$h_H$ | | | kJ/kg<br>kJ/m3 | N/A |
| 21 | *press. available @ 0——-30 | | | kPa (gs) | *press. available @ 150——500 150——2000 | | kPa (gs) | *press. available @ | | | kPa (gs) | N/A |
| 22 | *temp. @ burner | | 2300°C | | *temp. @ (Sea-w) | | 98°C | *temp. @ burner | | | °C | N/A |
| 23 | *relative molecular mass 17.96 | | | | *viscosity @ °C | | 0.2849 mPa·s | | | | | |
| 24 | | | | | *atomizing steam temp. | | 152&213°C | | | | | |
| 25 | component | mole fraction % | | | *pressure | | 5056.2000 kPa (gs) | | | | | |
| 26 | CH4 | 0.948 | | | Component | mass fraction | | component | mass fraction | | | |
| 27 | C2H6 | 0.535 | | | H2O | 1 | | N/A | N/A | | | |
| 28 | C3H8 | 1.839 | | | | | | | | | | |
| 29 | C4H10 | 0.906 | | | | | | | | | | |
| 30 | HCN | 0.304 | | | *vanadium (mg/kg) | none | | | | | | |
| 31 | H2 | 0.386 | | | *sodium (mg/kg) | none | | | | | | |
| 32 | CO | 70.058 | | | *sulfur | none | | | | | | |
| 33 | NO | 1.824 | | | *ash | 25 mg/kg | | | | | | |
| 34 | **Burner Data:** | | | | | | | | | | | |
| 35 | type: | | | Naatural gas burner | location: | | The bottom of fired heater | orientation: | | | Igniter | |
| 36 | heat release per burner, MW | | | 21.28 | design: 25 MW | | normal: 23 MW | minimum: | | | 20 MW | |
| 37 | pressure drop across burner @ design heat release, Pa: 10000 | | | | | | | | | | | |
| 38 | distance burner centerline to tube centerline, horizontal, mm: 150 | | | | | | | vertical, mm: | | | 1400 | |
| 39 | distance burner centerline to unshielded refractory, horizontal, mm: 2500 | | | | | | | vertical, mm: | | | 3830 | |
| 40 | ignition method: electric spark | | | | | | | | | | | |
| 41 | flame detection, type: ion cavelle flame monitoring method | | | | | | number: | | | | 3 | |
| 42 | **Notes:** | | | | | | | | | | | |

| Fired-heater Datasheet | | | | | | | | | | | | |
|---|---|---|---|---|---|---|---|---|---|---|---|---|
| | | | | | | | | | | | | |
| | | | | | | | | | | | | |
| | | | | | | | | | | | | |

The University of Nottingham

UNITED KINGDOM · CHINA · MALAYSIA

| Fired-heater Datasheet | | SI Units | | | | |
|---|---|---|---|---|---|---|
| | | rev.: | date: | | sheet 4 of 6 | |
| | **Mechanical Design Conditions** (continued) | | | | | |
| 1 | heater section: | Stack | Stack | Stack | Stack | Stack |
| 2 | service: | H | H | H | H | H |
| 3 | **Return Bends:** | | | | | |
| 4 | type | 90° return bend | 90° return bend | 90° return bend | 90° return bend | 90° return bend |
| 5 | material (specification and grade) | 3Cr-1Mo | 3Cr-1Mo | 3Cr-1Mo | 2 1/4 Cr-1Mo | 2 1/4 Cr-1Mo |
| 6 | nominal rating or schedule | ANSI class 300 | ANSI class 300 | ANSI class 300 | ANSI class 300 | ANSI class 300 |
| 7 | *location (f. b. – firebox, h. b. – header box) | f.b. | f.b. | f.b. | f.b. | f.b. |
| 8 | **Terminals and/or Manifolds:** | | | | | |
| 9 | *type (bev. – beveled, manif. – manifold, flg. – flanged) | flg. | flg. | flg. | flg. | flg. |
| 10 | inlet: material (specification and grade) | 3Cr-1Mo | 3Cr-1Mo | 3Cr-1Mo | 2 1/4 Cr-1Mo | 2 1/4 Cr-1Mo |
| 11 | size/schedule or thickness | 200 | 200 | 200 | 150 | 150 |
| 12 | number of terminals | 1 | 1 | 1 | 3 | 3 |
| 13 | flange material (ASTM specification and grade) | A182 F22 | A182 F22 | A182 F22 | A182 F22 | A182 F22 |
| 14 | outlet: material (specification and grade) | 304ss | 304ss | 304ss | 304ss | 304ss |
| 15 | size/schedule or thickness | 200 | 200 | 200 | 150 | 150 |
| 16 | number of terminals | 1 | 1 | 1 | 3 | 3 |
| 17 | flange material (specification and grade) | A182 F22 | A182 F22 | A182 F22 | A182 F22 | A182 F22 |
| 18 | *manifold to tube connection (welded, extruded, etc.) | N/A | N/A | N/A | welded | welded |
| 19 | manifold location (inside or outside header box) | N/A | N/A | N/A | outside header boox | outside header boox |
| 20 | **Tube Supports:** | | | | | |
| 21 | location (ends, top, bottom) | bottom | bottom | bottom | bottom | bottom |
| 22 | material (specification and grade) | 25Cr-20Ni/i | 25Cr-20Ni/i | 25Cr-20Ni/i | 25Cr-20Ni/i | 25Cr-20Ni/i |
| 23 | design metal temperature, °C | 1144.5 | 1144.5 | 1144.5 | 178 | 240 |
| 24 | thickness, mm | 16 | 16 | 16 | 16 | 16 |
| 25 | type and thickness of insulation, mm | 8 | 8 | 8 | 8 | 8 |
| 26 | **Intermediate Tube Supports:** | | | | | |
| 27 | material (specification and grade) | 25Cr-20Ni/i | 25Cr-20Ni/i | 25Cr-20Ni/i | 25Cr-20Ni/i | 25Cr-20Ni/i |
| 28 | design metal temperature, °C | 1575 | 1575 | 1575 | 500 | 500 |
| 29 | thickness, mm | 16 | 16 | 16 | 16 | 16 |
| 30 | Maximum spacing, m | 3 | 3 | 3 | 3 | 3 |
| 31 | **Notes:** | | | | | |

| Fired-heater Datasheet | | | | | | | | |
|---|---|---|---|---|---|---|---|---|
| | | | | rev.: | date: | | sheet 5 of 6 | |
| | **Mechanical Design Conditions** (continued) | | | | | | | |
| 1 | **Refractory Design Basis:** | | | | | | | rev. |
| 2 | ambient temperature, °C: 1260 | wind velocity, m/s | 25 | casing temperature, °C: | | 50 | | |
| 3 | **Exposed Vertical Walls:** | | | | | | | |
| 4 | lining thickness, mm: 20 | hot-face temperature, design/calculated, °C: | | | | 1650 | 1500 | |
| 5 | wall construction: Brick | | | | | | | |
| 6 | casing material: Carbon steel | thickness, mm: | 10 | temperature, °C: | | 50 | | |
| 7 | **Shielded Vertical Walls:** | | | | | | | |
| 8 | lining thickness, mm: 20 | hot-face temperature, design/calculated, °C: | | | | 1650 | 1500 | |
| 9 | wall construction: Brick | | | | | | | |
| 10 | casing material: Carbon steel | thickness, mm: | 15 | temperature, °C: | | 1530 | | |
| 11 | **Floor:** | | | | | | | |
| 12 | lining thickness, mm: 300 | hot-face temperature, design/calculated, °C: | | | | 2530 | 2300 | |
| 13 | floor construction: Brick | | | | | | | Br |
| 14 | casing material: Carbon steel | thickness, mm: | 30 | temperature, °C: | | 117 | | |
| 15 | minimum floor elevation, m: 0.5 | free space below plenum, m: | | | | 3 | | |
| 16 | **Convection Section:** | | | | | | | |
| 17 | lining thickness, mm: 15 | hot-face temperature, design/calculated, °C: | | | | 1650 | 1500 | |
| 18 | wall construction: Brick | | | | | | | |
| 19 | casing material: Carbon steel | thickness, mm: | 10 | temperature, °C: | | 2300/1650/700/153 | | |
| 20 | **Internal Wall:** | | | | | | | |
| 21 | type:Fire resistance and insulation | material:refractory brick | | | | | | |
| 22 | dimension, height/width: 10450*4210 | | | | | | | |
| 23 | **Plenum Chamber (Air):** | | | | | | | |
| 24 | casing material: Carbon steel | thickness, mm: | 20 | size, mm: | | 3890*4210 | | |
| 25 | lining material: 316ss | | | | thickness, mm: | 7 | | |
| 26 | **Notes:** | | | | | | | |

| Fired-heater Datasheet | | | | | | | | |
|---|---|---|---|---|---|---|---|---|
| | | | | rev.: | date: | | sheet 6 of 6 | |
| | **Mechanical Design Conditions** (continued) | | | | | | | |
| 1 | **Stack or Stack Stub:** | | | | | | | rev. |
| 2 | number: 1 | | | | location: | | Above combustion chamber | |
| 3 | casing material: Carbon steel | *corrosion allow., mm: | | 4.5 | minimum thickness, mm: | | 132 | |
| 4 | inside metal diameter, m: 4 | height above grade, m: | | 10.45 | stack length, m: | | 6 | |
| 5 | lining material:Refractory brick | | | | thickness, mm: | | | |
| 6 | design flue gas velocity, m/s 30 | flue gas temp., °C: | | 45-2300 | | | | |
| 7 | **Miscellaneous:** | | | | | | | |
| 8 | platforms: location | number | width | length/arc | stairs/ladder | access from | | |
| 9 | | 2 | 2000 mm | 6000 mm | 2000 mm | stack and combustion chamber | | |
| 10 | type of flooring: Refractory brick | | | | | | | |
| 11 | | number | | location | size | bolted/hinged | | |
| 12 | doors: | 4 | | stack and combustion chamber | 2000*1000 mm | N/A | | |
| 13 | observation | 4 | | stack and combustion chamber | D=500 mm | N/A | | |
| 14 | instrument connections: | | | number | size | type | | |
| 15 | flue gas/combustion air temperature | | | 2 | 300*500 | Thermocouples | | |
| 16 | flue gas/combustion air pressure | | | 2 | 200*300 | Bourdon | | |
| 17 | flue gas sample | | | 1 | 26" | Component analysis | | |
| 18 | snuffing steam/purge | | | 6 | 14"/26"/28"/64" | | | |
| 19 | $O_2$ analyzer | | | 2 | 26"/64" | Component analysis | | |
| 20 | CO or $NO_x$ analyzer | | | 1 | 64" | Component analysis | | |
| 21 | vents/drains | | | 1 | 80" | Drain valves | | |
| 22 | process fluid temperature | | | 8 | 300*500 | Thermocouples | | |
| 23 | tube skin thermocouples | | | 8 | 100*300 | Thermocouples | | |
| 24 | painting requirements: Fire protection and insulation | | | | | | | |
| 25 | internal coating: Fire insulation coating, thickness 20mm | | | | | | | |
| 26 | galvanizing requirements: N/A | | | | | | | |
| 27 | are painter's trolley and rail included? Yes | | | | | | | |
| 28 | other: N/A | | | | | | | |
| 29 | **Notes:** | | | | | | | |

| Burner Datasheet | | SI Units | | | |
|---|---|---|---|---|---|
| | | rev.: | date: | sheet 1 of 1 | |
| **Purchaser/Owner:** | | **Item No.:** | | | |
| **Service:** | H | **Location** | Combustor | | |
| 1 | **General Data:** | | | rev. | |
| 2 | type of heater | Low pressure gas heater | | | |
| 3 | altitude above sea level, m | 20 | | | |
| 4 | air supply: | Surrounding air | | | |
| 5 | temperature, °C (min./max./design) | 50/2530 | | | |
| 6 | relative humidity % | 3% | | | |
| 7 | draft available, Pa: across burner | 70000 | | | |
| 8 | draft available, Pa: across plenum | 100000 | | | |
| 9 | required turndown | yes | | | |
| 10 | burner-wall lining thickness, mm | 20 | | | |
| 11 | heater-casing thickness, mm | 100 | | | |
| 12 | firebox height, m | 4 | | | |
| 13 | tube-circle diameter, m | 300 | | | |
| 14 | **Burner Data:** | | | | |
| 15 | location (roof/floor/sidewall) | Floor | | | |
| 16 | number required | 2 | | | |
| 17 | minimum distance burner centerline, mm | 400 | | | |
| 18 | to tube centerline (horizontal/vertical) | horizontal | | | |
| 19 | to adjacent burner centerline (horizontal/vertical) | horizontal | | | |
| 20 | to unshielded refractory (horizontal/vertical) | vertical | | | |
| 21 | burner-circle diameter, m | 2 | | | |
| 22 | fuel | Natural gas, HCN, CO, NO and H2 | | | |
| 23 | fuel pressure, kPa | 100 | | | |
| 24 | capacity, MW | 21.28 | | | |
| 25 | **Operating Data:** | | | | |
| 26 | fuel | Natural gas, HCN, CO, NO and H2 | | | |
| 27 | heat release per burner, MW ($h_r$) | 21.28 | | | |
| 28 | design | 25 | | | |
| 29 | normal | 21 | | | |
| 30 | minimum | 2.8 | | | |
| 31 | excess air @ design heat release, (%) | 10% | | | |
| 32 | air temperature, °C | 135 | | | |
| 33 | fuel pressure required, kPa | 70 | | | |
| 34 | flame length @ design heat release, m | 4 | | | |
| 35 | flame shape (round, flat, etc.) | round | | | |
| 36 | atomizing medium/oil ratio, kg/kg | N/A | | | |
| 37 | **Notes:** | | | | |

The University of Nottingham

UNITED KINGDOM · CHINA · MALAYSIA

## 6.6 HE-001

| | | | | | | | | | | | | | | | | | |
|---|---|---|---|---|---|---|---|---|---|---|---|---|---|---|---|---|---|
| 1 | CLIENT: | Lucite | | | | | | | | | | | | | | | |
| 2 | LOCATION: | Cassel Works, Billingham TS23 1LE | | | | | | | | | | | | | | | |
| 3 | SERVICE: | Natural gas heat exchange | | | | | | | | | | | | | | | |
| 4 | PROJECT: | Natural gas heat exchange | | | | | | | | | | | | | | | |
| 5 | JOB NO.: | 2022-001 | | | | | | | | | | | | | | | |
| 6 | | | | | | | | | | | | | | | | | |
| 7 | Rev | Size | 500*4000 | TEMA Type | AES | (Hor/Vert) | | Horizontal | | Connected in | N/A | Parallel | N/A | Series | | | |
| 8 | | Surf/Unit (Gross/Eff.) | 4.2 | m² | Shells/Unit | | | 1 | | Surf/Shell (Gross/Eff.) | | | 4.2 | | | m² | |
| 9 | | **PERFORMANCE OF ONE UNIT** | | | | | | **SHELL SIDE** | | | | | **TUBE SIDE** | | | | |
| 10 | | FLUID NAME | | | | | | Purified natural gas | | | | | Natural gas raw material | | | | |
| 11 | | TOTAL FLUID ENTERING | | | | kg/h | | 5478 | | | | | 6161.1 | | | | |
| 12 | | Vapour | | | ( In/Out ) | | | 5478 | 5478 | | | | 6161.1 | 6161.1 | | | |
| 13 | | Liquid | | | | | | N/A | N/A | | | | N/A | N/A | | | |
| 14 | | Steam | | | | | | N/A | N/A | | | | N/A | N/A | | | |
| 15 | | Water | | | | | | N/A | N/A | | | | N/A | N/A | | | |
| 16 | | Non-condensibles | | | | | | N/A | N/A | | | | N/A | N/A | | | |
| 17 | | FLUID VAPORISED OR CONDENSED | | | | kg/h | | N/A | | | | | N/A | | | | |
| 18 | | Temperature | | | ( In/Out ) | °C | | -146 | -47 | | | | 25 | -42 | | | |
| 19 | | Specific Gravity, Liquid | | | | | | 0.002445 | 0.001337 | | | | 0.04103 | 0.06532 | | | |
| 20 | | Viscosity, Liquid | | | | cP | | 0.005232 | 0.008934 | | | | 0.01263 | 0.0111 | | | |
| 21 | | Molecular Weight, Vapour | | | | | | N/A | N/A | | | | N/A | N/A | | | |
| 22 | | Molecular Weight, Non-condensibles | | | | | | 16.63 | 16.63 | | | | 17.4 | 17.4 | | | |
| 23 | | Specific Heat | | | | J/kg °C | | 9112 | 10270 | | | | 8643 | 7962 | | | |
| 24 | | Thermal Conductivity | | | | W/m °C | | 0.01134 | 0.02341 | | | | 0.0374 | 0.0314 | | | |
| 25 | | Latent Heat | | | | J/kg @ °C | | 4738000 | | | | | 4383000 | | | | |
| 26 | | Inlet Pressure | | | | bara | | 1.5 | | | | | 52 | | | | |
| 27 | | Velocity | | | | m/sec | | 15 | | | | | 8 | | | | |
| 28 | | Pressure Drop, Allowable / Calculated | | | | bar | | 0.3 | / 0.0005 | | | | 0.7 | / 0.0697 | | | |
| 29 | | Fouling Resistance ( Min. ) | | | | m² °C / W | | 0.000000625 | | | | | 0.000000588 | | | | |
| 30 | | Heat Exchanged | | | | W | | 305500 | MTD ( Corrected ) | | | | | 81.96 | | | |
| 31 | | Heat Transfwer Rate Service / Clean | | | | W/m² °C | | 820.8 | | | | / | 824 | | | | |
| 32 | | **CONSTRUCTION OF ONE SHELL** | | | | | | | | | | | | | | | |
| 33 | | | | | | | | Shell Side | | Tube Side | | | | | | | |
| 34 | | Design / Test Pressure | | | | barg | | 0.85 | / 1.775 | 56.2 | / 84.8 | | | | | | |
| 35 | | Design Temperature Max. / Min. | | | | °C | | -72 | / -171 | 50 | / -57 | | | | | | |
| 36 | | No. Passes per Shell | | | | | | 1 | | 1 | | | | | | | |
| 37 | | Corrosion Allowance | | | | mm | | 1.5 | | 0.2 | | | | | | | |
| 38 | | Connections Size & Rating | In | | | | | 10" | | 3" | | | | | | | |
| 39 | | | Out | | | | | 12" | | 2 1/2" | | | | | | | |
| 40 | | | Intermediate | | | | | N/A | | N/A | | | | | | | |
| 41 | | Tube No. | 21 | OD | 19 | mm; | Thk. (Min/Avg) | 0.601 | mm; | Length | 3500 | mm; | Pitch | 13 | mm | | 60 |
| 42 | | Tube Type | | | Plain | | | | | Tube Material | Stainless steel | | Shell Material | | Carbon steel | | |
| 43 | | Shell | ID | 494 | mm | OD | 500 | mm | | Shell Cover | ( Integral ) | | Material | | Carbon steel | | |
| 44 | | Channel or Bonnet | | Channel | | Material | Stainless steel | | | Channel Cover | | Yes | Material | | Stainless steel | | |
| 45 | | Tubesheet - Stationary | | | | Material | Stainless steel | | | Tubesheet - Floating | | No | Material | | Stainless steel | | |
| 46 | | Floating Head Cover | | No | | Material | Stainless steel | | | Impingement Protection | | Yes | | | | | |
| 47 | | Baffles-Cross | | | | Type | Vertical | | | % Cut (Diam/Area) | 40 | | Spacing : c/c | 4.8 | Inlet | By Vendor | mm |
| 48 | | Baffles - Longditudinal | | | | N/A | | | | Seal Type | | | N/A | | | | |
| 49 | | Supports - Tube | | By Vendor | | U-Bend | | | | By Vendor | | | Type | | By Vendor | | |
| 50 | | Bypass Seal Arrangement | | | | By Vendor | | | | Tube-to-Tubesheet Joint | | | By Vendor | | | | |
| 51 | | Expansion Joint | | | | N/A | | | | Type | | | N/A | | | | |
| 52 | | $\rho V^2$ - Inlet Nozzle | | By Vendor | | Bundle Entrance | | | | By Vendor | | | Bundle Exit | | By Vendor | | |
| 53 | | Gaskets - | Shell Side | | | TBA | | | | Tube Side | | | TBA | | | | |
| 54 | | Floating Head | | | | | | | | By Vendor | | | | | | | |
| 56 | | Code Requirements | | | | | | BS EN 13445 | | | | TEMA Class | | "B" | | | |
| 57 | | Weight / Shell | Empty : | | By Vendor | kg | Filled with Water : | | By Vendor | kg | Bundle : | | | By Vendor | | | kg |
| 58 | | Remarks : | | | | | | | | | | | | | | | |
| 59 | | | | | | | | | | | | | | | | | |
| 61 | | | | | | | | | | | | | | | | | |
| 62 | | REV. | DESCRIPTION | | | | | | DATE | BY | CHECK | APPROVED | DOCUMENT NO. | | | | |
| 63 | | 1 | First draft | | | | | | 4/24/2022 | GYA | WYK | WYK | | | | | |
| 64 | | 2 | Final draft | | | | | | 4/25/2022 | GYA | WYK | WYK | HE-001 | | | | |
| 65 | | | | | | | | | | | | | | | | | |
| 66 | | | | | | | | | | | | | SHEET | 1 | OF | 1 | |

**PROCESS DATA SHEET**
**SHELL & TUBE HEAT EXCHANGER**

UNIT NO.: HE-001

ITEM NO.: HE-001 NO. REQD.: 1

Sketch ( Bundle / Nozzle Orientation )

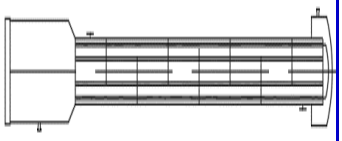

The University of Nottingham

UNITED KINGDOM · CHINA · MALAYSIA

## 6.7 HE-002

| | | | | | | | | | | | | | | | | | |
|---|---|---|---|---|---|---|---|---|---|---|---|---|---|---|---|---|---|
| 1 | CLIENT: | Lucite | | | | | | | | | | | | | | | |
| 2 | LOCATION: | Cassel Works, Billingham TS23 1LE | | | | | | | | | | | | | | | |
| 3 | SERVICE: | Natural gas heat exchange | | | | | | | | | | | | | | | |
| 4 | PROJECT: | ydrogen Cyanide and AMS Plant Replaceme | | | | | | | | | | | | | | | |
| 5 | JOB NO.: | 2022-001 | | | | | | | | | | | | | | | |
| 6 | | | | | | | | | | | | | | | | | |
| 7 | Rev | Size | 500*4000 | TEMA Type | AES | (Hor/Vert) | | Horizontal | | Connected in | N/A | Parallel | N/A | Series | | | |
| 8 | | Surf/Unit (Gross/Eff.) | 12.02 | m² | Shells/Unit | | | 1 | | Surf/Shell (Gross/Eff.) | | | 12.02 | | m² | | |
| 9 | | **PERFORMANCE OF ONE UNIT** | | | | | | **SHELL SIDE** | | | | | **TUBE SIDE** | | | | |
| 10 | | FLUID NAME | | | | | | Coolant | | | | | Purified natural gas | | | | |
| 11 | | TOTAL FLUID ENTERING | | | | kg/h | | 22898.54 | | | | | 5478 | | | | |
| 12 | | Vapour | | | ( In/Out ) | | | N/A | N/A | | | | 5478 | 5478 | | | |
| 13 | | Liquid | | | | | | 8014.489 | 8014.489 | | | | N/A | N/A | | | |
| 14 | | Steam | | | | | | N/A | N/A | | | | N/A | N/A | | | |
| 15 | | Water | | | | | | 14884.051 | 14884.051 | | | | N/A | N/A | | | |
| 16 | | Non-condensibles | | | | | | N/A | N/A | | | | N/A | N/A | | | |
| 17 | | FLUID VAPORISED OR CONDENSED | | | | kg/h | | N/A | | | | | N/A | | | | |
| 18 | | Temperature | | | ( In/Out ) | °C | | 24.47 | 17.35 | | | | -47 | 0 | | | |
| 19 | | Specific Gravity, Liquid | | | | | | 1.008 | 1.008 | | | | 0.001337 | 0.001103 | | | |
| 20 | | Viscosity, Liquid | | | | cP | | 0.9 | 0.91 | | | | 0.008934 | 0.01062 | | | |
| 21 | | Molecular Weight, Vapour | | | | | | N/A | N/A | | | | N/A | N/A | | | |
| 22 | | Molecular Weight, Non-condensibles | | | | | | 20.02 | 20.02 | | | | 16.63 | 16.63 | | | |
| 23 | | Specific Heat | | | | J/kg °C | | 4313 | 4314 | | | | 1027 | 1067 | | | |
| 24 | | Thermal Conductivity | | | | W/m °C | | 0.6102 | 0.6096 | | | | 0.02341 | 0.02977 | | | |
| 25 | | Latent Heat | | | | J/kg @ °C | | 15890000 | | | | | 4538000 | | | | |
| 26 | | Inlet Pressure | | | | bara | | 1.5 | | | | | 1.5 | | | | |
| 27 | | Velocity | | | | m/sec | | 3.5 | | | | | 15 | | | | |
| 28 | | Pressure Drop, Allowable / Calculated | | | | bar | | 0.3 | / | 0.0178 | | | 0.7 | / | 0.0156 | | |
| 29 | | Fouling Resistance ( Min. ) | | | | m² °C / W | | 0.000000313 | | | | | 0.000000143 | | | | |
| 30 | | Heat Exchanged | | | | W | | 148100 | MTD ( Corrected ) | | | | | | 21.13 | | |
| 31 | | Heat Transfwer Rate Service / Clean | | | | W/m² °C | | 572.6 | | | | / | 574 | | | | |
| 32 | | **CONSTRUCTION OF ONE SHELL** | | | | | | | | | | | Sketch ( Bundle / Nozzle Orientation ) | | | | |
| 33 | | | | | | | | Shell Side | | | Tube Side | | | | | | |
| 34 | | Design / Test Pressure | | | | barg | | 0.85 | / | 1.775 | 0.85 | / | 1.775 | | | | |
| 35 | | Design Temperature Max. / Min. | | | | °C | | 49.47 | / | 7.35 | 25 | / | -62 | | | | |
| 36 | | No. Passes per Shell | | | | | | 1 | | | 1 | | | | | | |
| 37 | | Corrosion Allowance | | | | mm | | 1.5 | | | 0.2 | | | | | | |
| 38 | | Connections Size & Rating | In | | | | | 2 1/2" | | | 12" | | | | | | |
| 39 | | | Out | | | | | 2 1/2" | | | 14" | | | | | | |
| 40 | | | Intermediate | | | | | N/A | | | N/A | | | | | | |
| 41 | | Tube No. | 58 | OD | 19 | mm; | Thk. (Min/Avg) | 0.271 | mm; | Length | 3500 | mm; | Pitch | 13 | mm | | 60 |
| 42 | | Tube Type | | | Plain | | | | | Tube Material | Stainless steel | | Shell Material | | Carbon steel | | |
| 43 | | Shell | ID | 494 | mm | OD | 500 | mm | | Shell Cover | ( Integral ) | | Material | | Carbon steel | | |
| 44 | | Channel or Bonnet | | Channel | | Material | Stainless steel | | | Channel Cover | | Yes | Material | | Stainless steel | | |
| 45 | | Tubesheet - Stationary | | | | Material | Stainless steel | | | Tubesheet - Floating | | No | Material | | Stainless steel | | |
| 46 | | Floating Head Cover | | No | | Material | Stainless steel | | | Impingement Protection | | Yes | | | | | |
| 47 | | Baffles-Cross | | | | Type | Vertical | | | % Cut (Diam/Area) | 40 | | Spacing : c/c | 4.8 | Inlet | By Vendor | mm |
| 48 | | Baffles - Longditudinal | | | | N/A | | | | Seal Type | | | N/A | | | | |
| 49 | | Supports - Tube | | By Vendor | | U-Bend | | | | By Vendor | | | Type | | By Vendor | | |
| 50 | | Bypass Seal Arrangement | | | | By Vendor | | | | Tube-to-Tubesheet Joint | | | By Vendor | | | | |
| 51 | | Expansion Joint | | | | N/A | | | | Type | | | N/A | | | | |
| 52 | | $\rho V^2$ - Inlet Nozzle | | By Vendor | | Bundle Entrance | | | | By Vendor | | | Bundle Exit | | By Vendor | | |
| 53 | | Gaskets - | Shell Side | | | TBA | | | | Tube Side | | | TBA | | | | |
| 54 | | Floating Head | | | | | | | | By Vendor | | | | | | | |
| 56 | | Code Requirements | | | | BS EN 13445 | | | | | | TEMA Class | | "B" | | | |
| 57 | | Weight / Shell | Empty : | | By Vendor | kg | Filled with Water : | | By Vendor | kg | Bundle : | | | By Vendor | | | kg |
| 58 | | Remarks : | | | | | | | | | | | | | | | |
| 59 | | | | | | | | | | | | | | | | | |
| 61 | | | | | | | | | | | | | | | | | |
| 62 | | REV. | DESCRIPTION | | | | | | DATE | BY | CHECK | APPROVED | DOCUMENT NO. | | | | |
| 63 | | 1 | First draft | | | | | | 4/24/2022 | GYA | WYK | WYK | | | | | |
| 64 | | 2 | Final draft | | | | | | 4/25/2022 | GYA | WYK | WYK | HE-002 | | | | |
| 65 | | | | | | | | | | | | | | | | | |
| 66 | | | | | | | | | | | | | SHEET | 1 | OF | 1 | |

**PROCESS DATA SHEET**
**SHELL & TUBE HEAT EXCHANGER**

UNIT NO.: HE-002

ITEM NO.: HE-002 NO. REQD.: 1

The University of Nottingham

UNITED KINGDOM · CHINA · MALAYSIA

## 6.8 HE-003A

| | | | | | | | | | | | | | | | | | |
|---|---|---|---|---|---|---|---|---|---|---|---|---|---|---|---|---|---|
| 1 | CLIENT: | Lucite | | | | | | | | | | | | | | | |
| 2 | LOCATION: | Cassel Works, Billingham TS23 1LE | | | | | | | | | | | | | | | |
| 3 | SERVICE: | Vapor Heat exchange | | | | | | | | | | | | | | | |
| 4 | PROJECT: | ydrogen Cyanide and AMS Plant Replaceme | | | | | | | | | | | | | | | |
| 5 | JOB NO.: | 2022-001 | | | | | | | | | | | | | | | |
| 6 | | | | | | | | | | | | | | | | | |
| 7 | Rev | Size | 2800*4000 | TEMA Type | AES | (Hor/Vert) | | Horizontal | | Connected in | N/A | Parallel | N/A | Series | | | |
| 8 | | Surf/Unit (Gross/Eff.) | 618.82 | m² | Shells/Unit | | | 1 | | Surf/Shell (Gross/Eff.) | | | 618.82 | | m² | | |
| 9 | | **PERFORMANCE OF ONE UNIT** | | | | | | **SHELL SIDE** | | | | | **TUBE SIDE** | | | | |
| 10 | | FLUID NAME | | | | | | Coolant | | | | | Product gas 210°C | | | | |
| 11 | | TOTAL FLUID ENTERING | | | | kg/h | | 69799 | | | | | 77524 | | | | |
| 12 | | Vapour | | | ( In/Out ) | | | N/A | N/A | | | | 77524 | 77524 | | | |
| 13 | | Liquid | | | | | | 24429.65 | 24429.65 | | | | N/A | N/A | | | |
| 14 | | Steam | | | | | | N/A | N/A | | | | N/A | N/A | | | |
| 15 | | Water | | | | | | 45369.35 | 45369.35 | | | | N/A | N/A | | | |
| 16 | | Non-condensibles | | | | | | N/A | N/A | | | | N/A | N/A | | | |
| 17 | | FLUID VAPORISED OR CONDENSED | | | | kg/h | | N/A | | | | | N/A | | | | |
| 18 | | Temperature | | | ( In/Out ) | °C | | -20 | 40 | | | | 210 | 80 | | | |
| 19 | | Specific Gravity, Liquid | | | | | | 1.04 | 1.01 | | | | 0.00062 | 0.00085 | | | |
| 20 | | Viscosity, Liquid | | | | cP | | 2.64 | 1.02 | | | | 0.02037 | 0.01472 | | | |
| 21 | | Molecular Weight, Vapour | | | | | | N/A | N/A | | | | N/A | N/A | | | |
| 22 | | Molecular Weight, Non-condensibles | | | | | | 20.02 | 20.02 | | | | 24.86 | 24.86 | | | |
| 23 | | Specific Heat | | | | J/kg °C | | 4350 | 4314 | | | | 7180 | 6775 | | | |
| 24 | | Thermal Conductivity | | | | W/m °C | | 0.5341 | 0.6034 | | | | 0.036 | 0.0268 | | | |
| 25 | | Latent Heat | | | | J/kg @ °C | | 16080000 | | | | | 2271000 | | | | |
| 26 | | Inlet Pressure | | | | bara | | 1.5 | | | | | 1 | | | | |
| 27 | | Velocity | | | | m/sec | | 2.5 | | | | | 30 | | | | |
| 28 | | Pressure Drop, Allowable / Calculated | | | | bar | | 0.3 | / | 0.003 | | | 0.7 | / | 0.0158 | | |
| 29 | | Fouling Resistance ( Min. ) | | | | m² °C / W | | 0.0000091 | | | | | 0.0000004 | | | | |
| 30 | | Heat Exchanged | | | | W | | 13694755 | MTD ( Corrected ) | | | | | | 90.53 | | |
| 31 | | Heat Transfwer Rate Service / Clean | | | | W/m² °C | | 230 | | | | / | 244 | | | | |
| 32 | | **CONSTRUCTION OF ONE SHELL** | | | | | | | | | | | Sketch ( Bundle / Nozzle Orientation ) | | | | |
| 33 | | | | | | | | Shell Side | | | Tube Side | | | | | | |
| 34 | | Design / Test Pressure | | | | barg | | 0.85 | / | 1.775 | 0 | / | 1.025 | | | | |
| 35 | | Design Temperature Max. / Min. | | | | °C | | 65 | / | -35 | 235 | / | 65 | | | | |
| 36 | | No. Passes per Shell | | | | | | 1 | | | 1 | | | | | | |
| 37 | | Corrosion Allowance | | | | mm | | 1.5 | | | 0.2 | | | | | | |
| 38 | | Connections Size & Rating | In | | | | | 4" | | | 64" | | | | | | |
| 39 | | | Out | | | | | 4" | | | 38" | | | | | | |
| 40 | | | Intermediate | | | | | N/A | | | N/A | | | | | | |
| 41 | | Tube No. | 2963 | OD | 19 | mm; | Thk. (Min/Avg) | 0.271 | mm; | Length | 3500 | mm; | Pitch | 13 | mm | | 60 |
| 42 | | Tube Type | | | Plain | | | | Tube Material | Stainless steel | | | Shell Material | | Carbon steel | | |
| 43 | | Shell | ID | 2790 | mm | OD | 2800 | mm | Shell Cover | | ( Integral ) | | Material | | Carbon steel | | |
| 44 | | Channel or Bonnet | | Channel | | Material | Stainless steel | | Channel Cover | | | Yes | Material | | Stainless steel | | |
| 45 | | Tubesheet - Stationary | | | | Material | Stainless steel | | Tubesheet - Floating | | | No | Material | | Stainless steel | | |
| 46 | | Floating Head Cover | | No | | Material | Stainless steel | | Impingement Protection | | | Yes | | | | | |
| 47 | | Baffles-Cross | | | | Type | Vertical | | % Cut (Diam/Area) | | 40 | Spacing : c/c | | 4.8 | Inlet | By Vendor | mm |
| 48 | | Baffles - Longditudinal | | | | N/A | | | Seal Type | | | | N/A | | | | |
| 49 | | Supports - Tube | | By Vendor | | U-Bend | | | By Vendor | | | Type | | | By Vendor | | |
| 50 | | Bypass Seal Arrangement | | | | By Vendor | | | Tube-to-Tubesheet Joint | | | | By Vendor | | | | |
| 51 | | Expansion Joint | | | | N/A | | | Type | | | | N/A | | | | |
| 52 | | ρV² - Inlet Nozzle | | By Vendor | | Bundle Entrance | | | By Vendor | | | Bundle Exit | | | By Vendor | | |
| 53 | | Gaskets - | Shell Side | | | TBA | | | Tube Side | | | | TBA | | | | |
| 54 | | Floating Head | | | | | | | By Vendor | | | | | | | | |
| 56 | | Code Requirements | | | | BS EN 13445 | | | | | | TEMA Class | | "B" | | | |
| 57 | | Weight / Shell | Empty : | By Vendor | kg | Filled with Water : | By Vendor | kg | Bundle : | By Vendor | kg | | | | | | |
| 58 | | Remarks : | | | | | | | | | | | | | | | |
| 59 | | | | | | | | | | | | | | | | | |
| 61 | | | | | | | | | | | | | | | | | |
| 62 | | REV. | DESCRIPTION | | | | | DATE | BY | CHECK | APPROVED | DOCUMENT NO. | | | | | |
| 63 | | 1 | First draft | | | | | 4/24/2022 | GYA | WYK | WYK | | | | | | |
| 64 | | 2 | Final draft | | | | | 4/25/2022 | GYA | WYK | WYK | HE-003 | | | | | |
| 65 | | | | | | | | | | | | | | | | | |
| 66 | | | | | | | | | | | | SHEET | 1 | OF | 1 | | |

The University of Nottingham

UNITED KINGDOM · CHINA · MALAYSIA

## 6.9 HE-003B

| | | | | | | | | | | | | | | | | | |
|---|---|---|---|---|---|---|---|---|---|---|---|---|---|---|---|---|---|
| 1 | CLIENT: | Lucite | | | | | | | | | | | | | | | |
| 2 | LOCATION: | Cassel Works, Billingham TS23 1LE | | | | | | | | | | | | | | | |
| 3 | SERVICE: | Natural gas heat exchange | | | | | | | | | | | | | | | |
| 4 | PROJECT: | ydrogen Cyanide and AMS Plant Replaceme | | | | | | | | | | | | | | | |
| 5 | JOB NO.: | 2022-001 | | | | | | | | | | | | | | | |
| 6 | | | | | | | | | | | | | | | | | |
| 7 | Rev | Size | 500*4000 | TEMA Type | AES | (Hor/Vert) | | Horizontal | | Connected in | N/A | Parallel | N/A | Series | | | |
| 8 | | Surf/Unit (Gross/Eff.) | 9.37 | m² | Shells/Unit | | | 1 | | Surf/Shell (Gross/Eff.) | | | 9.37 | | m² | | |
| 9 | | **PERFORMANCE OF ONE UNIT** | | | | | | **SHELL SIDE** | | | | | **TUBE SIDE** | | | | |
| 10 | | FLUID NAME | | | | | | Bottom of FC-001 | | | | | Coolant | | | | |
| 11 | | TOTAL FLUID ENTERING | | | | kg/h | | 683 | | | | | 278102.4 | | | | |
| 12 | | Vapour | | | ( In/Out ) | | | N/A | N/A | | | | N/A | N/A | | | |
| 13 | | Liquid | | | | | | 683 | 683 | | | | 97335.84 | 97335.84 | | | |
| 14 | | Steam | | | | | | N/A | N/A | | | | N/A | N/A | | | |
| 15 | | Water | | | | | | N/A | N/A | | | | 180766.56 | 180766.56 | | | |
| 16 | | Non-condensibles | | | | | | N/A | N/A | | | | N/A | N/A | | | |
| 17 | | FLUID VAPORISED OR CONDENSED | | | | kg/h | | N/A | | | | | N/A | | | | |
| 18 | | Temperature | | | ( In/Out ) | °C | | -146 | 0 | | | | 24.74 | 24.07 | | | |
| 19 | | Specific Gravity, Liquid | | | | | | 0.6074 | 0.001972 | | | | 1.008 | 1.008 | | | |
| 20 | | Viscosity, Liquid | | | | cP | | 0.3255 | 0.009613 | | | | 0.9 | 0.91 | | | |
| 21 | | Molecular Weight, Vapour | | | | | | N/A | N/A | | | | N/A | N/A | | | |
| 22 | | Molecular Weight, Non-condensibles | | | | | | 27.64 | 27.64 | | | | 20.02 | 20.02 | | | |
| 23 | | Specific Heat | | | | J/kg °C | | 2732 | 6764 | | | | 4313 | 4314 | | | |
| 24 | | Thermal Conductivity | | | | W/m °C | | 0.1871 | 0.02179 | | | | 0.6102 | 0.6096 | | | |
| 25 | | Latent Heat | | | | J/kg @ °C | | 4593000 | | | | | 15890000 | | | | |
| 26 | | Inlet Pressure | | | | bara | | 1.5 | | | | | 1.5 | | | | |
| 27 | | Velocity | | | | m/sec | | 3.5 | | | | | 2.5 | | | | |
| 28 | | Pressure Drop, Allowable / Calculated | | | | bar | | 0.3 | / 0.0156 | | | | 0.7 | / 0.2157 | | | |
| 29 | | Fouling Resistance ( Min. ) | | | | m² °C / W | | 0.0000001429 | | | | | 0.0000003125 | | | | |
| 30 | | Heat Exchanged | | | | W | | 133900 | MTD ( Corrected ) | | | | | 24.68 | | | |
| 31 | | Heat Transfwer Rate Service / Clean | | | | W/m² °C | | 572.95 | | | | / | 574 | | | | |
| 32 | | **CONSTRUCTION OF ONE SHELL** | | | | | | | | | | | Sketch ( Bundle / Nozzle Orientation ) | | | | |
| 33 | | | | | | | | Shell Side | | Tube Side | | | | | | | |
| 34 | | Design / Test Pressure | | | | barg | | 0.85 / 1.775 | | 0.85 / 1.775 | | | | | | | |
| 35 | | Design Temperature Max. / Min. | | | | °C | | -25 / -161 | | 49.74 / 9.07 | | | | | | | |
| 36 | | No. Passes per Shell | | | | | | 1 | | 1 | | | | | | | |
| 37 | | Corrosion Allowance | | | | mm | | 1.5 | | 0.2 | | | | | | | |
| 38 | | Connections Size & Rating | In | | | | | 1/4" | | 8" | | | | | | | |
| 39 | | | Out | | | | | 1/2" | | 8" | | | | | | | |
| 40 | | | Intermediate | | | | | N/A | | N/A | | | | | | | |
| 41 | | Tube No. | 45 | OD | 19 | mm; | Thk. (Min/Avg) | 0.271 | mm; | Length | 3500 | mm; | Pitch | 13 | mm | | 60 |
| 42 | | Tube Type | | | Plain | | | | | Tube Material | Stainless steel | | Shell Material | | Carbon steel | | |
| 43 | | Shell | ID | 494 | mm | OD | 500 | mm | | Shell Cover | ( Integral ) | | Material | | Carbon steel | | |
| 44 | | Channel or Bonnet | | Channel | | Material | Stainless steel | | | Channel Cover | | Yes | Material | | Stainless steel | | |
| 45 | | Tubesheet - Stationary | | | | Material | Stainless steel | | | Tubesheet - Floating | | No | Material | | Stainless steel | | |
| 46 | | Floating Head Cover | | No | | Material | Stainless steel | | | Impingement Protection | | Yes | | | | | |
| 47 | | Baffles-Cross | | | | Type | Vertical | | | % Cut (Diam/Area) | 40 | | Spacing : c/c | 4.8 | Inlet | By Vendor | mm |
| 48 | | Baffles - Longditudinal | | | | N/A | | | | Seal Type | | | N/A | | | | |
| 49 | | Supports - Tube | | By Vendor | | U-Bend | | | | By Vendor | | | Type | | By Vendor | | |
| 50 | | Bypass Seal Arrangement | | | | By Vendor | | | | Tube-to-Tubesheet Joint | | | By Vendor | | | | |
| 51 | | Expansion Joint | | | | N/A | | | | Type | | | N/A | | | | |
| 52 | | $\rho V^2$ - Inlet Nozzle | | By Vendor | | Bundle Entrance | | | | By Vendor | | | Bundle Exit | | By Vendor | | |
| 53 | | Gaskets - | Shell Side | | | TBA | | | | Tube Side | | | TBA | | | | |
| 54 | | Floating Head | | | | | | | | By Vendor | | | | | | | |
| 56 | | Code Requirements | | | | BS EN 13445 | | | | TEMA Class | | | "B" | | | | |
| 57 | | Weight / Shell | Empty : | | By Vendor | kg | Filled with Water : | | By Vendor | kg | Bundle : | | | By Vendor | | | kg |
| 58 | | Remarks : | | | | | | | | | | | | | | | |
| 59 | | | | | | | | | | | | | | | | | |
| 61 | | | | | | | | | | | | | | | | | |
| 62 | | REV. | DESCRIPTION | | | | | | DATE | BY | CHECK | APPROVED | DOCUMENT NO. | | | | |
| 63 | | 1 | First draft | | | | | | 4/24/2022 | GYA | WYK | WYK | | | | | |
| 64 | | 2 | Final draft | | | | | | 4/25/2022 | GYA | WYK | WYK | HE-003B | | | | |
| 65 | | | | | | | | | | | | | | | | | |
| 66 | | | | | | | | | | | | | SHEET | 1 | OF | 1 | |

**PROCESS DATA SHEET**
**SHELL & TUBE HEAT EXCHANGER**

UNIT NO.: HE-003-B

ITEM NO.: HE-003-B NO. REQD.: 2

The University of Nottingham

UNITED KINGDOM · CHINA · MALAYSIA

## 6.10 HE-004

| | | | | | | | | | | | | | | | |
|---|---|---|---|---|---|---|---|---|---|---|---|---|---|---|---|
| 1 | CLIENT: | Lucite | | | | | | | | | | | | | |
| 2 | LOCATION: | Cassel Works, Billingham TS23 1LE | | | | | | | | | | | | | |
| 3 | SERVICE: | Sulfuric acid heat exchanger | | | | | | | | | | | | | |
| 4 | PROJECT: | ydrogen Cyanide and AMS Plant Replaceme | | | | | | | | | | | | | |
| 5 | JOB NO.: | 2022-001 | | | | | | | | | | | | | |
| 6 | | | | | | | | | | | | | | | |
| 7 | Rev | Size | 1500*4000 | TEMA Type | AES | (Hor/Vert) | | Horizontal | | Connected in | N/A | Parallel | N/A | Series | |
| 8 | | Surf/Unit (Gross/Eff.) | 95.93 | m² | Shells/Unit | | 1 | | Surf/Shell (Gross/Eff.) | | | 95.93 | | m² | |
| 9 | | **PERFORMANCE OF ONE UNIT** | | | | **SHELL SIDE** | | | **TUBE SIDE** | | | | | | |
| 10 | | FLUID NAME | | | | Cooling w ater | | | A-002 external loop | | | | | | |
| 11 | | TOTAL FLUID ENTERING | | kg/h | | 1160000 | | | 142284.37 | | | | | | |
| 12 | | Vapour | ( In/Out ) | | | N/A | N/A | | N/A | N/A | | | | | |
| 13 | | Liquid | | | | N/A | N/A | | 53554.39 | 53554.39 | | | | | |
| 14 | | Steam | | | | N/A | N/A | | N/A | N/A | | | | | |
| 15 | | Water | | | | 1160000 | 1160000 | | 88729.98 | 88729.98 | | | | | |
| 16 | | Non-condensibles | | | | N/A | N/A | | N/A | N/A | | | | | |
| 17 | | FLUID VAPORISED OR CONDENSED | | kg/h | | N/A | | | N/A | | | | | | |
| 18 | | Temperature | ( In/Out ) | °C | | 25 | 31.5 | | 46 | 32 | | | | | |
| 19 | | Specific Gravity, Liquid | | | | 1.007 | 1.002 | | 0.807 | 0.82 | | | | | |
| 20 | | Viscosity, Liquid | | cP | | 0.89 | 0.772 | | 0.289 | 0.3444 | | | | | |
| 21 | | Molecular Weight, Vapour | | | | N/A | N/A | | N/A | N/A | | | | | |
| 22 | | Molecular Weight, Non-condensibles | | | | 18.02 | 18.02 | | 21.47 | 21.47 | | | | | |
| 23 | | Specific Heat | | J/kg °C | | 3007 | 3164 | | 2880 | 2801 | | | | | |
| 24 | | Thermal Conductivity | | W/m °C | | 0.611 | 0.62 | | 0.4329 | 0.4303 | | | | | |
| 25 | | Latent Heat | | J/kg @ °C | | 15850000 | | | 6403000 | | | | | | |
| 26 | | Inlet Pressure | | bara | | 1.5 | | | 0.8 | | | | | | |
| 27 | | Velocity | | m/sec | | 2.5 | | | 3 | | | | | | |
| 28 | | Pressure Drop, Allow able / Calculated | | bar | | 0.3 | / | 0.0021 | 0.7 | / | 0.192 | | | | |
| 29 | | Fouling Resistance ( Min. ) | | m² °C / W | | 0.00000003333 | | | 0.00000002632 | | | | | | |
| 30 | | Heat Exchanged | | W | | 5659219 | MTD ( Corrected ) | | | | 9.78 | | | | |
| 31 | | Heat Transfw er Rate | Service / Clean | W/m² °C | | 1660.5 | | / | 1676 | | | | | | |
| 32 | | **CONSTRUCTION OF ONE SHELL** | | | | | | | Sketch ( Bundle / Nozzle Orientation ) | | | | | | |
| 33 | | | | | | Shell Side | | | Tube Side | | | | | | |
| 34 | | Design / Test Pressure | | barg | | 0.85 | / | 1.775 | 1.35 | / | 1.85 | | | | |
| 35 | | Design Temperature Max. / Min. | | °C | | 56.5 | / | 10 | 71 | / | 17 | | | | |
| 36 | | No. Passes per Shell | | | | 1 | | | 1 | | | | | | |
| 37 | | Corrosion Allow ance | | mm | | 1.5 | | | 0.2 | | | | | | |
| 38 | | Connections Size & Rating | In | | | 8" | | | 6" | | | | | | |
| 39 | | | Out | | | 8" | | | 6" | | | | | | |
| 40 | | | Intermediate | | | N/A | | | N/A | | | | | | |
| 41 | | Tube No. | 460 | OD | 19 | mm; | Thk. (Min/Avg) | 0.271 | mm; | Length | 3500 | mm; | Pitch | 13 | mm |
| 42 | | Tube Type | | | Plain | | | | Tube Material | Stainless steel | | Shell Material | | Carbon steel | |
| 43 | | Shell | ID | 1490 | mm | OD | 1500 | mm | Shell Cover | | ( Integral ) | Material | | Carbon steel | |
| 44 | | Channel or Bonnet | | Channel | | Material | Stainless steel | | Channel Cover | | Yes | Material | | Stainless steel | |
| 45 | | Tubesheet - Stationary | | | | Material | Stainless steel | | Tubesheet - Floating | | No | Material | | Stainless steel | |
| 46 | | Floating Head Cover | | No | | Material | Stainless steel | | Impingement Protection | | Yes | | | | |
| 47 | | Baffles-Cross | | | | Type | Vertical | | % Cut (Diam/Area) | 40 | Spacing : c/c | 4.8 | Inlet | By Vendor | mm |
| 48 | | Baffles - Longditudinal | | | | N/A | | | Seal Type | | | N/A | | | |
| 49 | | Supports - Tube | | By Vendor | | U-Bend | | | By Vendor | | Type | | | By Vendor | |
| 50 | | Bypass Seal Arrangement | | | | By Vendor | | | Tube-to-Tubesheet Joint | | | | | By Vendor | |
| 51 | | Expansion Joint | | | | N/A | | | Type | | | N/A | | | |
| 52 | | ρV² - Inlet Nozzle | | By Vendor | | Bundle Entrance | | | By Vendor | | Bundle Exit | | | By Vendor | |
| 53 | | Gaskets - | Shell Side | | | TBA | | | Tube Side | | | TBA | | | |
| 54 | | Floating Head | | | | | | | By Vendor | | | | | | |
| 56 | | Code Requirements | | | | BS EN 13445 | | | | | TEMA Class | "B" | | | |
| 57 | | Weight / Shell | Empty : | By Vendor | kg | Filled w ith Water : | By Vendor | kg | Bundle : | By Vendor | | | | | kg |
| 58 | | Remarks : | | | | | | | | | | | | | |
| 59 | | | | | | | | | | | | | | | |
| 61 | | | | | | | | | | | | | | | |
| 62 | | REV. | DESCRIPTION | | | | | DATE | BY | CHECK | APPROVED | DOCUMENT NO. | | | |
| 63 | | 1 | First draft | | | | | 4/24/2022 | GYA | WYK | WYK | | | | |
| 64 | | 2 | Final draft | | | | | 4/25/2022 | GYA | WYK | WYK | HE-004 | | | |
| 65 | | | | | | | | | | | | | | | |
| 66 | | | | | | | | | | | | SHEET | 1 | OF | 1 |

The University of Nottingham

UNITED KINGDOM · CHINA · MALAYSIA

## 6.11 HE-005A

| | | | | | | | | | | | | | | | |
|---|---|---|---|---|---|---|---|---|---|---|---|---|---|---|---|
| 1 | CLIENT: | Lucite | | | | | | | | | | | | | |
| 2 | LOCATION: | Cassel Works, Billingham TS23 1LE | | | | | | | | | | | | | |
| 3 | SERVICE: | AMS & sulfate acid solution heat exchange | | | | | | | | | | | | | |
| 4 | PROJECT: | ydrogen Cyanide and AMS Plant Replaceme | | | | | | | | | | | | | |
| 5 | JOB NO.: | 2022-001 | | | | | | | | | | | | | |
| 6 | | | | | | | | | | | | | | | |
| 7 | Rev | Size | 500*4000 | TEMA Type | AES | (Hor/Vert) | | Horizontal | | Connected in | N/A | Parallel | N/A | Series | |
| 8 | | Surf/Unit (Gross/Eff.) | 6.59 | m² | Shells/Unit | | | 1 | | Surf/Shell (Gross/Eff.) | | | 6.59 | | m² |
| 9 | | **PERFORMANCE OF ONE UNIT** | | | | | | **SHELL SIDE** | | | | **TUBE SIDE** | | | |
| 10 | | FLUID NAME | | | | | | Cooling w ater | | | | A-001 external loop | | | |
| 11 | | TOTAL FLUID ENTERING | | | | kg/h | | 3386 | | | | 76030 | | | |
| 12 | | Vapour | | | ( In/Out ) | | | N/A | N/A | | | N/A | N/A | | |
| 13 | | Liquid | | | | | | N/A | N/A | | | 931 | 931 | | |
| 14 | | Steam | | | | | | N/A | N/A | | | N/A | N/A | | |
| 15 | | Water | | | | | | 3386 | 3386 | | | 75099 | 75099 | | |
| 16 | | Non-condensibles | | | | | | N/A | N/A | | | N/A | N/A | | |
| 17 | | FLUID VAPORISED OR CONDENSED | | | | kg/h | | N/A | | | | N/A | | | |
| 18 | | Temperature | | | ( In/Out ) | °C | | 25 | 70 | | | 77 | 75 | | |
| 19 | | Specific Gravity, Liquid | | | | | | 1.007 | 0.972 | | | 0.973 | 0.974 | | |
| 20 | | Viscosity, Liquid | | | | cP | | 0.89 | 0.4 | | | 0.388 | 0.3444 | | |
| 21 | | Molecular Weight, Vapour | | | | | | N/A | N/A | | | N/A | N/A | | |
| 22 | | Molecular Weight, Non-condensibles | | | | | | 18.02 | 18.02 | | | 22.54 | 22.54 | | |
| 23 | | Specific Heat | | | | J/kg °C | | 3007 | 3645 | | | 3680 | 3657 | | |
| 24 | | Thermal Conductivity | | | | W/m °C | | 0.611 | 0.6623 | | | 0.667 | 0.665 | | |
| 25 | | Latent Heat | | | | J/kg @ °C | | 15850000 | | | | 15560000 | | | |
| 26 | | Inlet Pressure | | | | bara | | 1.5 | | | | 0.9 | | | |
| 27 | | Velocity | | | | m/sec | | 2.5 | | | | 2.6 | | | |
| 28 | | Pressure Drop, Allow able / Calculated | | | | bar | | 0.3 | / | 0.0055 | | 0.7 | / | 0.1746 | |
| 29 | | Fouling Resistance ( Min. ) | | | | m² °C / W | | 0.0000000313 | | | | 0.0000000219 | | | |
| 30 | | Heat Exchanged | | | | W | | 171100 | MTD ( Corrected ) | | | | | 13.81 | |
| 31 | | Heat Transfw er Rate Service / Clean | | | | W/m² °C | | 1879 | | | / | 1880 | | | |
| 32 | | **CONSTRUCTION OF ONE SHELL** | | | | | | | | | | Sketch ( Bundle / Nozzle Orientation ) | | | |
| 33 | | | | | | | | Shell Side | | | | Tube Side | | | |
| 34 | | Design / Test Pressure | | | | barg | | 0.85 | / | 1.775 | | 0.25 | / | 1.875 | |
| 35 | | Design Temperature Max. / Min. | | | | °C | | 95 | / | 10 | | 102 | / | 60 | |
| 36 | | No. Passes per Shell | | | | | | 1 | | | | 1 | | | |
| 37 | | Corrosion Allow ance | | | | mm | | 1.5 | | | | 0.2 | | | |
| 38 | | Connections Size & Rating | In | | | | | 3/4" | | | | 5" | | | |
| 39 | | | Out | | | | | 3/4" | | | | 5" | | | |
| 40 | | | Intermediate | | | | | N/A | | | | N/A | | | |
| 41 | | Tube No. | 32 | OD | 19 | mm; | Thk. (Min/Avg) | 0.271 | mm; | Length | 3500 | mm; | Pitch | 13 | mm 60 |
| 42 | | Tube Type | | | Plain | | | | Tube Material | Stainless steel | | | Shell Material | Carbon steel | |
| 43 | | Shell | ID | 494 | mm | OD | 500 | mm | Shell Cover | | ( Integral ) | | Material | Carbon steel | |
| 44 | | Channel or Bonnet | | Channel | | Material | Stainless steel | | Channel Cover | | | Yes | Material | Stainless steel | |
| 45 | | Tubesheet - Stationary | | | | Material | Stainless steel | | Tubesheet - Floating | | | No | Material | Stainless steel | |
| 46 | | Floating Head Cover | | No | | Material | Stainless steel | | Impingement Protection | | | Yes | | | |
| 47 | | Baffles-Cross | | | | Type | Vertical | | % Cut (Diam/Area) | 40 | | Spacing : c/c | 4.8 | Inlet | By Vendor mm |
| 48 | | Baffles - Longditudinal | | | | N/A | | | Seal Type | | | | N/A | | |
| 49 | | Supports - Tube | | By Vendor | | U-Bend | | | By Vendor | | | Type | | By Vendor | |
| 50 | | Bypass Seal Arrangement | | | | By Vendor | | | Tube-to-Tubesheet Joint | | | | By Vendor | | |
| 51 | | Expansion Joint | | | | N/A | | | Type | | | | N/A | | |
| 52 | | ρV² - Inlet Nozzle | | By Vendor | | Bundle Entrance | | | By Vendor | | | Bundle Exit | | By Vendor | |
| 53 | | Gaskets - | Shell Side | | | TBA | | | Tube Side | | | TBA | | | |
| 54 | | Floating Head | | | | | | | By Vendor | | | | | | |
| 56 | | Code Requirements | | | | BS EN 13445 | | | | | | TEMA Class | "B" | | |
| 57 | | Weight / Shell | Empty : | By Vendor | kg | Filled w ith Water : | By Vendor | kg | Bundle : | By Vendor | kg | | | | |
| 58 | | Remarks : | | | | | | | | | | | | | |
| 59 | | | | | | | | | | | | | | | |
| 61 | | | | | | | | | | | | | | | |
| 62 | | REV. | DESCRIPTION | | | | | DATE | BY | CHECK | APPROVED | DOCUMENT NO. | | | |
| 63 | | 1 | First draft | | | | | 4/24/2022 | GYA | WYK | WYK | | | | |
| 64 | | 2 | Final draft | | | | | 4/25/2022 | GYA | WYK | WYK | HE-005A | | | |
| 65 | | | | | | | | | | | | | | | |
| 66 | | | | | | | | | | | | SHEET 1 OF 1 | | | |

The University of Nottingham

UNITED KINGDOM · CHINA · MALAYSIA

## 6.12 HE-005B

| | | | | | | | | | | | | | | | | | |
|---|---|---|---|---|---|---|---|---|---|---|---|---|---|---|---|---|---|
| 1 | CLIENT: | Lucite | | | | | | | | | | | | | | | |
| 2 | LOCATION: | Cassel Works, Billingham TS23 1LE | | | | | | | | | | | | | | | |
| 3 | SERVICE: | Sulfuric acid heat exchanger | | | | | | | | | | | | | | | |
| 4 | PROJECT: | Hydrogen Cyanide and AMS Plant Replacer | | | | | | | | | | | | | | | |
| 5 | JOB NO.: | 2022-001 | | | | | | | | | | | | | | | |
| 6 | | | | | | | | | | | | | | | | | |
| 7 | Rev | Size | 1000*4000 | TEMA Type | AES | (Hor/Vert) | | Horizontal | | Connected in | N/A | Parallel | N/A | Series | | | |
| 8 | | Surf/Unit (Gross/Eff.) | 40.2 | m² | Shells/Unit | | | 1 | | Surf/Shell (Gross/Eff.) | | | 40.2 | | m² | | |
| 9 | | **PERFORMANCE OF ONE UNIT** | | | | | | **SHELL SIDE** | | | | | **TUBE SIDE** | | | | |
| 10 | | FLUID NAME | | | | | | Cooling water | | | | | BE-001 external loop | | | | |
| 11 | | TOTAL FLUID ENTERING | | | kg/h | | | 98031 | | | | | 118870 | | | | |
| 12 | | Vapour | | | ( In/Out ) | | | N/A | N/A | | | | N/A | N/A | | | |
| 13 | | Liquid | | | | | | N/A | N/A | | | | 23774 | 23774 | | | |
| 14 | | Steam | | | | | | N/A | N/A | | | | N/A | N/A | | | |
| 15 | | Water | | | | | | 98031 | 98031 | | | | 95096 | 95096 | | | |
| 16 | | Non-condensibles | | | | | | N/A | N/A | | | | N/A | N/A | | | |
| 17 | | FLUID VAPORISED OR CONDENSED | | | kg/h | | | N/A | | | | | N/A | | | | |
| 18 | | Temperature | | | ( In/Out ) | °C | | 25 | 27.5 | | | | 30 | 28 | | | |
| 19 | | Specific Gravity, Liquid | | | | | | 1.007 | 1.002 | | | | 1.131 | 1.133 | | | |
| 20 | | Viscosity, Liquid | | | | cP | | 0.89 | 0.772 | | | | 1.128 | 1.173 | | | |
| 21 | | Molecular Weight, Vapour | | | | | | N/A | N/A | | | | N/A | N/A | | | |
| 22 | | Molecular Weight, Non-condensibles | | | | | | 18.02 | 18.02 | | | | 21.53 | 21.53 | | | |
| 23 | | Specific Heat | | | | J/kg °C | | 3007 | 3164 | | | | 3674 | 3645 | | | |
| 24 | | Thermal Conductivity | | | | W/m °C | | 0.611 | 0.62 | | | | 0.5891 | 0.5866 | | | |
| 25 | | Latent Heat | | | | J/kg @ °C | | 15850000 | | | | | 14260000 | | | | |
| 26 | | Inlet Pressure | | | | bara | | 1.5 | | | | | 1.5 | | | | |
| 27 | | Velocity | | | | m/sec | | 2.8 | | | | | 2.7 | | | | |
| 28 | | Pressure Drop, Allowable / Calculated | | | | bar | | 0.3 | / | 0.0041 | | | 0.7 | / | 0.2032 | | |
| 29 | | Fouling Resistance ( Min. ) | | | | m² °C / W | | 0.00000001942 | | | | | 0.00000001799 | | | | |
| 30 | | Heat Exchanged | | | | W | | 226600 | MTD ( Corrected ) | | | | | | 2.24 | | |
| 31 | | Heat Transfwer Rate Service / Clean | | | | W/m² °C | | 2662.9 | | | | / | 2674 | | | | |
| 32 | | **CONSTRUCTION OF ONE SHELL** | | | | | | | | | | | Sketch ( Bundle / Nozzle Orientation ) | | | | |
| 33 | | | | | | | | Shell Side | | | Tube Side | | | | | | |
| 34 | | Design / Test Pressure | | | | barg | | 0.85 | / | 1.775 | 0.85 | / | 1.775 | | | | |
| 35 | | Design Temperature Max. / Min. | | | | °C | | 52.5 | / | 10 | 55 | / | 13 | | | | |
| 36 | | No. Passes per Shell | | | | | | 1 | | | 1 | | | | | | |
| 37 | | Corrosion Allowance | | | | mm | | 1.5 | | | 0.2 | | | | | | |
| 38 | | Connections Size & Rating | In | | | | | 5" | | | 5" | | | | | | |
| 39 | | | Out | | | | | 5" | | | 5" | | | | | | |
| 40 | | | Intermediate | | | | | N/A | | | N/A | | | | | | |
| 41 | | Tube No. | 193 | OD | 19 | mm; | Thk. (Min/Avg) | 0.271 | mm; | Length | 3500 | mm; | Pitch | 13 | mm | | 60 |
| 42 | | Tube Type | | | Plain | | | | Tube Material | Stainless steel | | | Shell Material | | Carbon steel | | |
| 43 | | Shell | ID | 994 | mm | OD | 1000 | mm | Shell Cover | | ( Integral ) | | Material | | Carbon steel | | |
| 44 | | Channel or Bonnet | | Channel | | Material | Stainless steel | | Channel Cover | | | Yes | Material | | Stainless steel | | |
| 45 | | Tubesheet - Stationary | | | | Material | Stainless steel | | Tubesheet - Floating | | | No | Material | | Stainless steel | | |
| 46 | | Floating Head Cover | | No | | Material | Stainless steel | | Impingement Protection | | | Yes | | | | | |
| 47 | | Baffles-Cross | | | | Type | Vertical | | % Cut (Diam/Area) | | 40 | Spacing : c/c | | 4.8 | Inlet | By Vendor | mm |
| 48 | | Baffles - Longditudinal | | | | N/A | | | Seal Type | | | | N/A | | | | |
| 49 | | Supports - Tube | | By Vendor | | U-Bend | | | By Vendor | | | Type | | | By Vendor | | |
| 50 | | Bypass Seal Arrangement | | | | By Vendor | | | Tube-to-Tubesheet Joint | | | | By Vendor | | | | |
| 51 | | Expansion Joint | | | | N/A | | | Type | | | | N/A | | | | |
| 52 | | ρV² - Inlet Nozzle | | By Vendor | | Bundle Entrance | | | By Vendor | | | Bundle Exit | | | By Vendor | | |
| 53 | | Gaskets - | Shell Side | | | TBA | | | Tube Side | | | | TBA | | | | |
| 54 | | Floating Head | | | | | | | By Vendor | | | | | | | | |
| 56 | | Code Requirements | | | | BS EN 13445 | | | | | | TEMA Class | | "B" | | | |
| 57 | | Weight / Shell | Empty : | | By Vendor | kg | Filled with Water : | | By Vendor | kg | Bundle : | | | By Vendor | | | kg |
| 58 | | Remarks : | | | | | | | | | | | | | | | |
| 59 | | | | | | | | | | | | | | | | | |
| 61 | | | | | | | | | | | | | | | | | |
| 62 | | REV. | DESCRIPTION | | | | | DATE | BY | CHECK | APPROVED | DOCUMENT NO. | | | | | |
| 63 | | 1 | First draft | | | | | 4/24/2022 | GYA | WYK | WYK | | | | | | |
| 64 | | 2 | Final draft | | | | | 4/25/2022 | GYA | WYK | WYK | HE-005-B | | | | | |
| 65 | | | | | | | | | | | | | | | | | |
| 66 | | | | | | | | | | | | SHEET | 1 | OF | 1 | | |

The University of Nottingham

UNITED KINGDOM · CHINA · MALAYSIA

## 6.13 HE-006A

| | | | | | | | | | | | | | | | | | |
|---|---|---|---|---|---|---|---|---|---|---|---|---|---|---|---|---|---|
| 1 | CLIENT: | Lucite | | | | | | | | | | | | | | | |
| 2 | LOCATION: | Cassel Works, Billingham TS23 1LE | | | | | | | | | | | | | | | |
| 3 | SERVICE: | HCN heat exchange | | | | | | | | | | | | | | | |
| 4 | PROJECT: | ydrogen Cyanide and AMS Plant Replaceme | | | | | | | | | | | | | | | |
| 5 | JOB NO.: | 2022-001 | | | | | | | | | | | | | | | |
| 6 | | | | | | | | | | | | | | | | | |
| 7 | Rev | Size | 1000*4000 | TEMA Type | AES | (Hor/Vert) | | Horizontal | | Connected in | N/A | Parallel | N/A | Series | | | |
| 8 | | Surf/Unit (Gross/Eff.) | 77.76 | m² | Shells/Unit | | | 1 | | Surf/Shell (Gross/Eff.) | | | 77.76 | | m² | | |
| 9 | | **PERFORMANCE OF ONE UNIT** | | | | | | **SHELL SIDE** | | | | | **TUBE SIDE** | | | | |
| 10 | | FLUID NAME | | | | | | Coolant | | | | | The outlet gas of absorber | | | | |
| 11 | | TOTAL FLUID ENTERING | | | | kg/h | | 22782.52 | | | | | 60673 | | | | |
| 12 | | Vapour | | | ( In/Out ) | | | N/A | N/A | | | | 60673 | | | 60673 | |
| 13 | | Liquid | | | | | | 7974.9 | 7974.9 | | | | N/A | | | N/A | |
| 14 | | Steam | | | | | | N/A | N/A | | | | N/A | | | N/A | |
| 15 | | Water | | | | | | 14807.62 | 14807.62 | | | | N/A | | | N/A | |
| 16 | | Non-condensibles | | | | | | N/A | N/A | | | | N/A | | | N/A | |
| 17 | | FLUID VAPORISED OR CONDENSED | | | | kg/h | | N/A | | | | | N/A | | | | |
| 18 | | Temperature | | | ( In/Out ) | °C | | -20 | 20 | | | | 75 | | | 32 | |
| 19 | | Specific Gravity, Liquid | | | | | | 1.04 | 1.01 | | | | 0.000772 | | | 0.000882 | |
| 20 | | Viscosity, Liquid | | | | cP | | 2.64 | 1.02 | | | | N/A | | | N/A | |
| 21 | | Molecular Weight, Vapour | | | | | | N/A | N/A | | | | 27.93 | | | 27.93 | |
| 22 | | Molecular Weight, Non-condensibles | | | | | | 20.02 | 20.02 | | | | N/A | | | N/A | |
| 23 | | Specific Heat | | | | J/kg °C | | 4350 | 4314 | | | | 5633 | | | 5490 | |
| 24 | | Thermal Conductivity | | | | W/m °C | | 0.5341 | 0.6034 | | | | 0.00277 | | | 0.02484 | |
| 25 | | Latent Heat | | | | J/kg @ °C | | 16080000 | | | | | 363600 | | | | |
| 26 | | Inlet Pressure | | | | bara | | 1.2 | | | | | 0.8 | | | | |
| 27 | | Velocity | | | | m/sec | | 2.5 | | | | | 30 | | | | |
| 28 | | Pressure Drop, Allowable / Calculated | | | | bar | | 0.3 | / | 0.0028 | | | 0.7 | / | | 0.0203 | |
| 29 | | Fouling Resistance ( Min. ) | | | | m² °C / W | | 0.0000000909 | | | | | 0.0000000400 | | | | |
| 30 | | Heat Exchanged | | | | W | | 783500 | MTD ( Corrected ) | | | | | | | 41.48 | |
| 31 | | Heat Transfwer Rate Service / Clean | | | | W/m² °C | | 243.8 | | | | / | 244 | | | | |
| 32 | | **CONSTRUCTION OF ONE SHELL** | | | | | | | | | | | Sketch ( Bundle / Nozzle Orientation ) | | | | |
| 33 | | | | | | | | Shell Side | | | Tube Side | | | | | | |
| 34 | | Design / Test Pressure | | | | barg | | 0.55 | / | 1.325 | 1.15 | / | 1.65 | | | | |
| 35 | | Design Temperature Max. / Min. | | | | °C | | 45 | / | -30 | 100 | / | 17 | | | | |
| 36 | | No. Passes per Shell | | | | | | 1 | | | 1 | | | | | | |
| 37 | | Corrosion Allowance | | | | mm | | 1.5 | | | 0.2 | | | | | | |
| 38 | | Connections Size & Rating | In | | | | | 2" | | | 48" | | | | | | |
| 39 | | | Out | | | | | 2" | | | 48" | | | | | | |
| 40 | | | Intermediate | | | | | N/A | | | N/A | | | | | | |
| 41 | | Tube No. | 373 | OD | 19 | mm; | Thk. (Min/Avg) | 0.271 | mm; | Length | 3500 | mm; | Pitch | 13 | mm | | 60 |
| 42 | | Tube Type | | | Plain | | | | Tube Material | Stainless steel | | | Shell Material | | | Carbon steel | |
| 43 | | Shell | ID | 994 | mm | OD | 1000 | mm | Shell Cover | | ( Integral ) | | Material | | | Carbon steel | |
| 44 | | Channel or Bonnet | | Channel | | Material | Stainless steel | | Channel Cover | | | Yes | Material | | | Stainless steel | |
| 45 | | Tubesheet - Stationary | | | | Material | Stainless steel | | Tubesheet - Floating | | | No | Material | | | Stainless steel | |
| 46 | | Floating Head Cover | | No | | Material | Stainless steel | | Impingement Protection | | | Yes | | | | | |
| 47 | | Baffles-Cross | | | | Type | Vertical | | % Cut (Diam/Area) | | 40 | | Spacing : c/c | 4.8 | Inlet | By Vendor | mm |
| 48 | | Baffles - Longditudinal | | | | N/A | | | Seal Type | | | | N/A | | | | |
| 49 | | Supports - Tube | | By Vendor | | U-Bend | | | By Vendor | | | | Type | | | By Vendor | |
| 50 | | Bypass Seal Arrangement | | | | By Vendor | | | Tube-to-Tubesheet Joint | | | | By Vendor | | | | |
| 51 | | Expansion Joint | | | | N/A | | | Type | | | | N/A | | | | |
| 52 | | ρV² - Inlet Nozzle | | By Vendor | | Bundle Entrance | | | By Vendor | | | | Bundle Exit | | | By Vendor | |
| 53 | | Gaskets - | Shell Side | | | TBA | | | Tube Side | | | | TBA | | | | |
| 54 | | Floating Head | | | | | | | By Vendor | | | | | | | | |
| 56 | | Code Requirements | | | | BS EN 13445 | | | | | | TEMA Class | | | "B" | | |
| 57 | | Weight / Shell | Empty : | | By Vendor | kg | Filled with Water : | | By Vendor | kg | Bundle : | | | | By Vendor | | kg |
| 58 | | Remarks : | | | | | | | | | | | | | | | |
| 59 | | | | | | | | | | | | | | | | | |
| 61 | | | | | | | | | | | | | | | | | |
| 62 | | REV. | DESCRIPTION | | | | | | DATE | BY | CHECK | APPROVED | DOCUMENT NO. | | | | |
| 63 | | 1 | First draft | | | | | | 4/24/2022 | GYA | WYK | WYK | | | | | |
| 64 | | 2 | Final draft | | | | | | 4/25/2022 | GYA | WYK | WYK | HE-006A | | | | |
| 65 | | | | | | | | | | | | | | | | | |
| 66 | | | | | | | | | | | | | SHEET | 1 | OF | 1 | |

The University of Nottingham

UNITED KINGDOM · CHINA · MALAYSIA

## 6.14 HE-006B

| | | | |
|---|---|---|---|
| CLIENT: | Lucite | CALCULATION SHEET | |
| LOCATION: | Cassel Works, Billingham TS23 1LE | | |
| SUBJECT: | AMS heat exchange | | |
| PROJECT: | Hydrogen Cyanide and AMS Plant Replacement | DOCUMENT NO.: | HE-006B |
| JOB NO.: | 2022-001 | EQUIPMENT ITEM NO.: | HE-006B |
| Rev. | | GROUP NO.: | Group 6 |

| | | | |
|---|---|---|---|
| | **Calculation process for HE-006-B** | | |
| | Description: cool the product | | |
| | Tube side: | 1 | bar |
| | Mass flow rate of tube side flow | 6673.4 | kg/h |
| | The spesified flow velocity | 3.5 | m/s |
| | Mass heat capacity | 1.183 | kJ/kg-C |
| | Inlet temperature | 25.69 | C |
| | Target outlet temperature | 5 | C |
| | Total heat tranferred Q=CmdT | 163339.94 | kJ |
| | Desity | 681.6 | kg/m3 |
| | Shell side: | 1.5 | bar |
| | Mass flow rate of shell side flow | 6183.3 | kg/h |
| | The spesified flow velocity | 2.5 | m/s |
| | Mass heat capacity | 3.265 | kJ/kg-C |
| | Inlet temperature | -20 | C |
| | Letant heat of the cooling flow | 16077 | kJ/kg |
| | Heat transferred due to latant heat | 0 | kJ |
| | density | 1040 | kg/m3 |
| | Outlet temperature | 4 | C |
| | LMTD $dT_{lm}$ | 22.30 | C |
| | FT | 1 | |
| | MTD $dT_m$ | 22.30 | C |
| | $Q=UA(dT_m)$ | | |
| | UA | 7323.32 | kJ/C-h |
| | | 2034.26 | $W/m^2C$ |
| For this heat exchanger | The convection coefficient of inner fluid $h_i$ | 1100 | $W/m^2C$ |
| | The convection coefficient of outer fluid $h_o$ | 1800 | $W/m^2C$ |
| | The overall heat transfer coefficient U $\frac{1}{U} \approx \frac{1}{h_i} + \frac{1}{h_o}$ | 683 | $W/m^2C$ |
| | The heat exchange area A | 2.98 | $m^2$ |
| | The specified tube length | 3.5 | m |
| | Inner diameter of tube | 18.458 | mm |
| | The minimum thickness of tube wall $t = \frac{PD}{2\sigma}$ | 0.0056 | mm |
| | Yield strength | 170 | Mpa |
| | Tube OD | 19 | mm |
| | Tube thickness | 0.271 | mm |
| | The cross section area of one tube | 0.000267 | $m^2$ |
| | Number of tubes | 14.26 | |
| | Number of tubes designed | 15 | |
| | Totall cross section area of tubes | 0.0040 | $m^2$ |
| | Pitch (60) | 23.75 | mm |
| | Area for one pipe | 879.29 | $mm^2$ |
| | Total area for the shell | 0.0264 | $m^2$ |

| REV. | DESCRIPTION | DATE | BY | CHECK | APPROVED | DOCUMENT NO. |
|---|---|---|---|---|---|---|
| | | | | | | HE-006B |
| | | | | | | PAGE 2 OF |

SEE PAGE 1

The University of Nottingham

UNITED KINGDOM · CHINA · MALAYSIA

## 6.15 HE-007A

| | | | |
|---|---|---|---|
| CLIENT: | Lucite | **CALCULATION SHEET** | |
| LOCATION: | Cassel Works, Billingham TS23 1LE | | |
| SUBJECT: | AMS heat exchange | | |
| PROJECT: | Hydrogen Cyanide and AMS Plant Replacement | DOCUMENT NO.: | HE-007 |
| JOB NO.: | 2022-001 | EQUIPMENT ITEM NO.: | HE-007 |
| Rev. | | GROUP NO.: | Group 6 |

| | | | |
|---|---|---|---|
| | **Calculation process for HE-007** | | |
| | Description: HE-007 is the heat exchanger for cooling the recycled bottom product from the distillation column and heat the feed of distillation column | | |
| | Tube side: | 3.5 | bar |
| | Mass flow rate of tube side flow | 11112.2 | kg/h |
| | The spesified flow velocity | 2.8 | m/s |
| | Mass heat capacity | 4.636 | kJ/kg-C |
| | Inlet temperature | 135.8 | C |
| | Target outlet temperature | 94.17 | C |
| | Total heat tranferred Q=CmdT | 2144617.71 | kJ |
| | Desity | 914.3 | kg/m3 |
| | Shell side: | 2.73 | bar |
| | Mass flow rate of shell side flow | 17785.55 | kg/h |
| | The spesified flow velocity | 3.3 | m/s |
| | Mass heat capacity | 2.852 | kJ/kg-C |
| | Inlet temperature | 49 | C |
| | Letant heat of the cooling flow | 8291 | kJ/kg |
| | Heat transferred due to latant heat | 0 | kJ |
| | density | 835.3 | kg/m3 |
| | Outlet temperature | 77 | C |
| | | | |
| | LMTD $dT_{lm}$ | 34.51 | C |
| | FT | 1 | |
| | MTD $dT_m$ | 34.51 | C |
| | $Q=UA(dT_m)$ | | |
| | UA | 62147.05 | kJ/C-h |
| | | 17263.07 | $W/m^2C$ |
| For this heat exchanger | The convection coefficient of inner fluid $h_i$ | 1500 | $W/m^2C$ |
| | The convection coefficient of outer fluid $h_o$ | 1200 | $W/m^2C$ |
| | The overall heat transfer coefficient U $\frac{1}{U} \approx \frac{1}{h_i} + \frac{1}{h_o}$ | 667 | $W/m^2C$ |
| | | | |
| | The heat exchange area A | 25.89 | $m^2$ |
| | The specified tube length | 3.5 | m |
| | Inner diameter of tube | 18.46 | mm |
| | The minimum thickness of tube wall $t = \frac{PD}{2\sigma}$ | 0.02 | mm |
| | | | |
| | Yield strength | 170 | Mpa |
| | Tube OD | 19 | mm |
| | Tube thickness | 0.27 | mm |
| | The cross section area of one tube | 0.000267 | $m^2$ |
| | Number of tubes | 123.95 | |
| | Number of tubes designed | 124 | |
| | Totall cross section area of tubes | 0.0352 | $m^2$ |
| | Pitch (60) | 23.75 | mm |
| | Area for one pipe | 879.29 | $mm^2$ |
| | Total area for the shell | 0.2181 | $m^2$ |

| REV. | DESCRIPTION | DATE | BY | CHECK | APPROVED | DOCUMENT NO. |
|---|---|---|---|---|---|---|
| | | | | | | HE-007 |
| | | | | | | PAGE 2 OF |

SEE PAGE 1

The University of Nottingham

UNITED KINGDOM · CHINA · MALAYSIA

## 6.16 HE-007B

| | | | |
|---|---|---|---|
| CLIENT: | Lucite | | |
| LOCATION: | Cassel Works, Billingham TS23 1LE | | |
| SUBJECT: | AMS heat exchange | | |
| PROJECT: | Hydrogen Cyanide and AMS Plant Replacement | | |
| JOB NO.: | 2022-001 | | |
| Rev. | | | |

The University of Nottingham

UNITED KINGDOM · CHINA · MALAYSIA

**CALCULATION SHEET**

DOCUMENT NO.: HE-007B

EQUIPMENT ITEM NO.: HE-007B

GROUP NO.: Group 6

| | | | | |
|---|---|---|---|---|
| | **Calculation process for HE-007-B** | | | |
| | Description: | | | |
| | Tube side: | | 0.8 | bar |
| | Mass flow rate of tube side flow | | 8243.4 | kg/h |
| | The spesified flow velocity | | 30 | m/s |
| | Mass heat capacity | | 3.45 | kJ/kg-C |
| | Inlet temperature | | 80 | C |
| | Target outlet temperature | | 76 | C |
| | Total heat tranferred | Q=CmdT | 113758.92 | kJ |
| | Desity | | 0.36 | kg/m3 |
| | Shell side: | | 1.5 | bar |
| | Mass flow rate of shell side flow | | 12106.7 | kg/h |
| 0.212021605 | The spesified flow velocity | | 30 | m/s |
| | Mass heat capacity | | 1 | kJ/kg-C |
| | Inlet temperature | | 25 | C |
| | Letant heat of the steam | | 2295 | kJ/kg |
| | Heat transferred due to latant heat | | 18918603 | kJ |
| | density | | 1.4 | kg/m3 |
| | Outlet temperature | | 75.0 | C |
| | Q total | | 19032361.9 | kJ |
| | LMTD $dT_{lm}$ | | 18.21 | C |
| | FT | | 1 | |
| | MTD $dT_m$ | | 18.21 | C |
| | $Q=UA(dT_m)$ | | | |
| | UA | | 1045012.65 | kJ/C-h |
| | | | 290281.29 | $W/m^2C$ |
| For this heat exchanger | The convection coefficient of inner fluid $h_i$ | | 4000 | $W/m^2C$ |
| | The convection coefficient of outer fluid $h_o$ | | 1600 | $W/m^2C$ |
| | The overall heat transfer coefficient U | $\frac{1}{U} \approx \frac{1}{h_i} + \frac{1}{h_o}$ | 1143 | $W/m^2C$ |
| | The heat exchange area A | | 254.00 | $m^2$ |
| | The specified tube length | | 3.5 | m |
| | Inner diameter of tube | | 18.458 | mm |
| | The minimum thickness of tube wall | $t = \frac{PD}{2\sigma}$ | 0.0043 | mm |
| | Yield strength | | 170 | Mpa |
| | Tube OD | | 19 | mm |
| | Tube thickness | | 0.271 | mm |
| | The cross section area of one tube | | 0.000267 | $m^2$ |
| | Number of tubes | | 1215.82 | |
| | Number of tubes designed | | 1216 | |
| | Totall cross section area of tubes | | 0.3254 | $m^2$ |
| | Pitch (60) | | 23.75 | mm |
| | Area for one pipe | | 879.29 | $mm^2$ |
| | Total area for the shell | | 2.1384 | $m^2$ |

| REV. | DESCRIPTION | DATE | BY | CHECK | APPROVED | DOCUMENT NO. |
|---|---|---|---|---|---|---|
| | | | | | | HE-007B |
| | | | | | | PAGE 2 OF |

SEE PAGE 1

The University of Nottingham

UNITED KINGDOM · CHINA · MALAYSIA

| | | | |
|---|---|---|---|
| CLIENT: | 0 | The University of Nottingham<br>UNITED KINGDOM · CHINA · MALAYSIA | **CALCULATION SHEET** |
| LOCATION: | 0 | | |
| SUBJECT: | 0 | | |
| PROJECT: | 0 | | DOCUMENT NO.: 0 |
| JOB NO.: | 0 | | EQUIPMENT ITEM NO.: 0 |
| Rev. | | | GROUP NO.: 0 |

| | | |
|---|---|---|
| The diameter of the heat exchanger | 1.65 | m |
| The diameter of the heat exchanger designed | 2 | m |
| Length of tube pipes | 3.5 | m |
| heat transfer area | 254.034 | m2 |
| length of tube channel | 0.23 | m |
| Total length of heat exchanger | 3.97 | m |
| Pressure drop for HE-008 | | |
| For tube side | | |
| viscosity | 0.011 | cp |
| | 0.000011 | Pa.s |
| Re | 18122.40 | |
| Relative roughness ε/D | 0.00249214 | |
| From the Moody's chart f | 0.028 | |
| pressure drop $\Delta P = f \times \frac{L}{D} \times \frac{\rho v^2}{2}$ | 860.11 | Pa |
| | 0.0086 | bar |
| For shell side | | |
| viscosity | 0.019 | cp |
| | 0.000019 | Pa.s |
| Velocity | 0.76501 | m/s |
| Re | 112737.92 | |
| f | 0.024 | |
| pressure drop | 26.46 | Pa |
| | 0.0003 | bar |

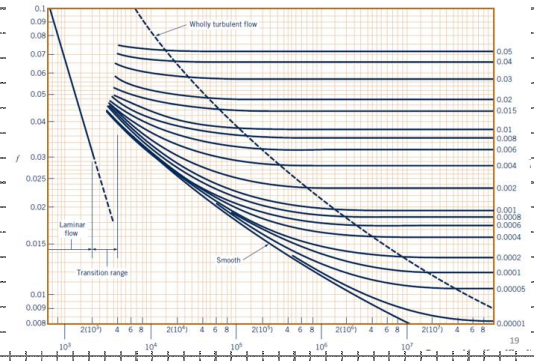


| REV. | DESCRIPTION | DATE | BY | CHECK | APPROVED | DOCUMENT NO. |
|---|---|---|---|---|---|---|
| | | | | | | 0 |
| | | | | | | PAGE 1 OF |

SEE PAGE 1

The University of Nottingham

UNITED KINGDOM · CHINA · MALAYSIA

## 6.17 HE-008

| | | | |
|---|---|---|---|
| CLIENT: | Lucite | | |
| LOCATION: | Cassel Works, Billingham TS23 1LE | | |
| SUBJECT: | AMS heat exchange | | |
| PROJECT: | Hydrogen Cyanide and AMS Plant Replacement | | |
| JOB NO.: | 2022-001 | | |
| Rev. | | | |

The University of Nottingham

UNITED KINGDOM · CHINA · MALAYSIA

**CALCULATION SHEET**

DOCUMENT NO.: HE-008

EQUIPMENT ITEM NO.: HE-008

GROUP NO.: Group 6

| | | | |
|---|---|---|---|
| | **Calculation process for HE-008** | | |
| | Description: HE-008 EV-001 external loop | | |
| | | 862539.871 | |
| | Tube side: | 20 | bar |
| | Mass flow rate of tube side flow | 7943.88 | kg/h |
| | The spesified flow velocity | 10 | m/s |
| | Mass heat capacity | 3.45 | kJ/kg-C |
| | Inlet temperature | 212.8 | C |
| | Target outlet temperature | 99.5 | C |
| | Total heat tranferred Q=CmdT | 3105143.53 | kJ |
| | Desity | 8.925 | kg/m3 |
| | Shell side: | 0.8 | bar |
| | Mass flow rate of shell side flow | 26395.5 | kg/h |
| 0.024724183 | The spesified flow velocity | 2.5 | m/s |
| | Mass heat capacity | 3.16 | kJ/kg-C |
| | Inlet temperature | 75 | C |
| | Letant heat of the cooling flow | 1859 | kJ/kg |
| | Heat transferred due to latant heat | 14763701 | kJ |
| | density | 1177 | kg/m3 |
| | Outlet temperature | 80.0 | C |
| | Q total | 17868844.5 | kJ |
| | LMTD $dT_{lm}$ | 34.70 | C |
| | FT | 1 | |
| | MTD $dT_m$ | 34.70 | C |
| | $Q=UA(dT_m)$ | | |
| | UA | 514880.32 | kJ/C-h |
| | | 143022.31 | $W/m^2C$ |
| For this heat exchanger | The convection coefficient of inner fluid $h_i$ | 3500 | $W/m^2C$ |
| | The convection coefficient of outer fluid $h_o$ | 4000 | $W/m^2C$ |
| | The overall heat transfer coefficient U $\frac{1}{U} \approx \frac{1}{h_i} + \frac{1}{h_o}$ | 1867 | $W/m^2C$ |
| | The heat exchange area A | 76.62 | $m^2$ |
| | The specified tube length | 3.5 | m |
| | Inner diameter of tube | 18.2 | mm |
| | The minimum thickness of tube wall $t = \frac{PD}{2\sigma}$ | 0.1118 | mm |
| | Yield strength | 170 | Mpa |
| | Tube OD | 19 | mm |
| | Tube thickness | 0.404 | mm |
| | The cross section area of one tube | 0.000260 | $m^2$ |
| | Number of tubes | 366.76 | |
| | Number of tubes designed | 367 | |
| | Totall cross section area of tubes | 0.0954 | $m^2$ |
| | Pitch (60) | 23.75 | mm |
| | Area for one pipe | 879.29 | $mm^2$ |
| | Total area for the shell | 0.6454 | $m^2$ |

| REV. | DESCRIPTION | DATE | BY | CHECK | APPROVED | DOCUMENT NO. |
|---|---|---|---|---|---|---|
| | | | | | | HE-008 |
| | | | | | | PAGE 2 OF |

SEE PAGE 1

| | | |
|---|---|---|
| The diameter of the heat exchanger | 0.91 | m |
| The diameter of the heat exchanger designed | 1 | m |
| | | |
| Length of tube pipes | 3.5 | m |
| heat transfer area | 76.670 | m2 |
| | | |
| length of tube channel | 0.23 | m |
| Total length of heat exchanger | 3.97 | m |
| | | |
| Pressure drop for HE-008 | | |
| | | |
| | | |
| For tube side | | |
| viscosity | 0.016 | cp |
| | 0.000016 | Pa.s |
| Re | 101477.25 | |
| | | |
| Relative roughness ε/D | 0.00252858 | |
| From the Moody's chart f | 0.026 | |
| pressure drop $\Delta P = f \times \frac{L}{D} \times \frac{\rho v^2}{2}$ | 2232.23 | Pa |
| | 0.0223 | bar |
| For shell side | | |
| viscosity | 0.733 | cp |
| | 0.000733 | Pa.s |
| Velocity | 0.00794 | m/s |
| Re | 12735.52 | |
| f | 0.038 | |
| pressure drop | 489.19 | Pa |
| | 0.0049 | bar |

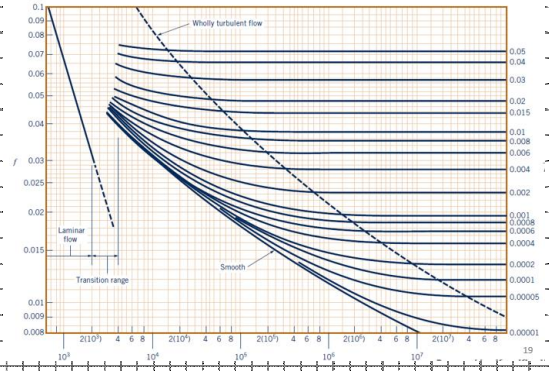


| REV. | DESCRIPTION | DATE | BY | CHECK | APPROVED | DOCUMENT NO. |
|---|---|---|---|---|---|---|
| | | | | | | 0 |
| | | | | | | PAGE 1 OF |

SEE PAGE 1

The University of Nottingham

UNITED KINGDOM · CHINA · MALAYSIA

## 6.18 HE-009

| | | | |
|---|---|---|---|
| CLIENT: | Lucite | | |
| LOCATION: | Cassel Works, Billingham TS23 1LE | | |
| SUBJECT: | AMS heat exchange | | |
| PROJECT: | Hydrogen Cyanide and AMS Plant Replacement | | |
| JOB NO.: | 2022-001 | | |
| Rev. | | | |

The University of Nottingham

UNITED KINGDOM · CHINA · MALAYSIA

**CALCULATION SHEET**

DOCUMENT NO.: HE-009

EQUIPMENT ITEM NO.: HE-009

GROUP NO.: Group 6

| | | | |
|---|---|---|---|
| | **Calculation process for HE-009** | | |
| | Description: To protect the Centrifugal | | |
| | Tube side: | 0.8 | bar |
| | Mass flow rate of tube side flow | 12288 | kg/h |
| | The spesified flow velocity | 2.5 | m/s |
| | Mass heat capacity | 3.141 | kJ/kg-C |
| | Inlet temperature | 80 | C |
| | Target outlet temperature | 50 | C |
| | Total heat tranferred Q=CmdT | 1157898.24 | kJ |
| | Desity | 1252 | kg/m3 |
| | Shell side: | 1.5 | bar |
| | Mass flow rate of shell side flow | 12927 | kg/h |
| | The spesified flow velocity | 2.5 | m/s |
| | Mass heat capacity | 4.2 | kJ/kg-C |
| | Inlet temperature | 25 | C |
| | Letant heat of the cooling flow | 16077 | kJ/kg |
| 0.001090522 | Heat transferred due to latant heat | 0 | kJ |
| | density | 1007 | kg/m3 |
| | Outlet temperature | 45 | C |
| | LMTD $dT_{lm}$ | 24.66 | C |
| | FT | 1 | |
| | MTD $dT_m$ | 24.66 | C |
| | Q=UA($dT_m$) | | |
| | UA | 46948.73 | kJ/C-h |
| | | 13041.31 | W/m$^2$C |
| For this heat exchanger | The convection coefficient of inner fluid $h_i$ | 4560 | W/m$^2$C |
| | The convection coefficient of outer fluid $h_o$ | 3200 | W/m$^2$C |
| | The overall heat transfer coefficient U $\frac{1}{U} \approx \frac{1}{h_i} + \frac{1}{h_o}$ | 1880 | W/m$^2$C |
| | The heat exchange area A | 6.94 | m$^2$ |
| | The specified tube length | 3.5 | m |
| | Inner diameter of tube | 18.458 | mm |
| | The minimum thickness of tube wall $t = \frac{PD}{2\sigma}$ | 0.0045 | mm |
| | Yield strength | 170 | Mpa |
| | Tube OD | 19 | mm |
| | Tube thickness | 0.271 | mm |
| | The cross section area of one tube | 0.000267 | m$^2$ |
| | Number of tubes | 33.20 | |
| | Number of tubes designed | 34 | |
| | Totall cross section area of tubes | 0.0091 | m$^2$ |
| | Pitch (60) | 23.75 | mm |
| | Area for one pipe | 879.29 | mm$^2$ |
| | Total area for the shell | 0.0598 | m$^2$ |

| REV. | DESCRIPTION | DATE | BY | CHECK | APPROVED | DOCUMENT NO. |
|---|---|---|---|---|---|---|
| | | | | | | HE-009 |
| | | | | | | PAGE 2 OF |

SEE PAGE 1

## 6.19 EV-001

| | | | |
|---|---|---|---|
| CLIENT: | Lucite | The University of Nottingham UNITED KINGDOM · CHINA · MALAYSIA | **CALCULATION SHEET** |
| LOCATION: | Cassel Works, New Road, Billingham | | |
| SUBJECT: | AMS crystallizer | | |
| PROJECT: | Hydrogen Cyanide and AMS Plant Re | | DOCUMENT NO.: EV-001 |
| JOB NO.: | 2022-001 | | EQUIPMENT ITEM NO.:EV-001 |
| Rev. | | | GROUP NO.: 6 |

**Objectives:**

To calculate some parameters and the dimentions of the crystallizer.

**Input Documents:**

| Document Title | Doc. Number | Rev. | Date |
|---|---|---|---|
| Maximum mass balance | 1 | 1 | 4/27/2022 |
| Minimum mass balance | 2 | 1 | 4/27/2022 |
| | | | |
| | | | |
| | | | |
| | | | |
| | | | |
| | | | |

**Assumptions:**

The length/inside diamter =1.55

The thickness is 65mm

**Summary of Results:**

The inside diameter of EV-001 is 2900mm

The tan to tan length of EV-001 is 4500mm

The thickness of EV-001 is 65mm

The total volume of EV-001 is 29.7 $m^3$

The outside diameter 2965 mm

The weight of EV-001 is 471.62 kg

| REV. | DESCRIPTION | DATE | BY | CHECK | APPROVED | DOCUMENT NO. |
|---|---|---|---|---|---|---|
| 1 | Final draft | 4/27/2022 | WLS | WYK | WYK/SJJ | EV-001 |
| | | | | | | |
| | | | | | | |
| | | | | | | PAGE 1 OF 2 |

The University of Nottingham

UNITED KINGDOM · CHINA · MALAYSIA

| | |
|---|---|
| CLIENT: | Lucite |
| LOCATION: | Cassel Works, New Road, Billingham TS23 1LB |
| SERVICE: | AMS crystallizer |
| PROJECT: | Hydrogen Cyanide and AMS Plant Replacement |
| JOB NO.: | 2022-001 |
| GROUP NO.: | 6 |

The University of Nottingham

UNITED KINGDOM · CHINA · MALAYSIA

# PROCESS DATA SHEET
# VERTICAL VESSEL

| | | | |
|---|---|---|---|
| UNIT NO.: | EV-001 | | |
| ITEM NO.: | EV-001 | NO. REQD.: | 1 |

REV

## PROCESS SKETCH

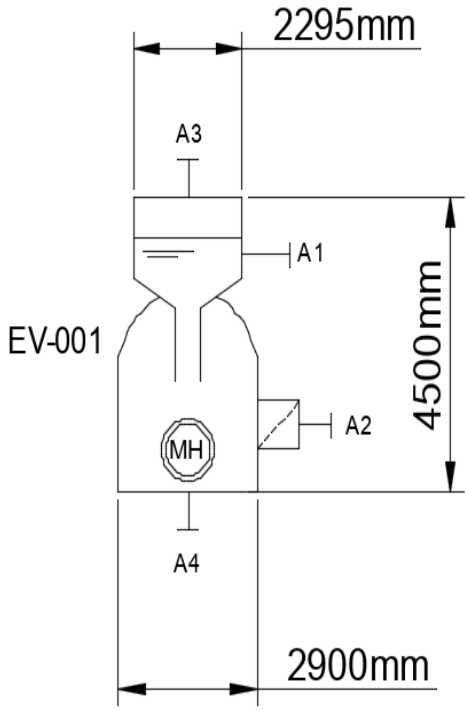


## MECHANICAL DESIGN DATA

| | | | | | |
|---|---|---|---|---|---|
| Design Pressure | | barg | : | -0.5 | |
| Vacuum design condition | Press bara : | None | | @ Temp °C : | N/A |
| Pressure drop through internals | | bar | : | 0.2 | |
| Maximum Design Temperature | | °C | : | 90 | |
| Minimum Design Temperature | | °C | : | 70 | |
| Minimum Ambient Temperature | | °C | : | 10 | |
| Steamout conditions | Press barg : | None | | @ Temp °C : | N/A |
| Corrosion Allowance | mm | | : | 3.0 | |
| Insulation Type | | | : | H | |
| Insulation Thickness | | mm | : | By Others | |
| Stress relieved (process reasons) | | | : | Yes | |
| Inside Diameter | | mm | : | 2900 | |
| Tan/Tan Length | | mm | : | 4500 | |
| Head Type | | | : | Semi-elliptical | |
| Total Volume | | m3 | : | 29.7 | |

## MATERIALS OF CONSTRUCTION

| | | |
|---|---|---|
| Shell Plate | : | 316 SS |
| Head Plate | : | 316 SS |
| Internals | : | 316 SS |

## CONNECTION DETAILS

| No. | SIZE DN | FLANGE FINISH | FLANGE RATING | SERVICE |
|---|---|---|---|---|
| A1 | 15 | RF | 150# | B |
| A2 | 15 | RF | 150# | B |
| A3 | 800 | RF | 150# | B |
| A4 | 15 | RF | 150# | B |

## INTERNALS DETAILS

The thickness of the EV-001 is 65mm

## NOTES:

Diameter of Manhole is. 1000m

A1 is the circulation loop

A2 is the vapor from EV-001

A3 is the ammonium sulfate slurry from EV-001

A4 is the ammonium sulfate feed

steam was used to heat the feed, and which was showed in heat exchang

| REV. | DESCRIPTION | DATE | BY | CHECK | APPROVED | DOCUMENT NO. |
|---|---|---|---|---|---|---|
| 1 | Final draft | 4/27/2022 | WLS | WYK | WYK/SJJ | |
| | | | | | | EV-001 |
| | | | | | | SHEET 1 OF 2 |

The University of Nottingham

UNITED KINGDOM · CHINA · MALAYSIA

| | | | |
|---|---|---|---|
| CLIENT: | Lucite | The University of Nottingham<br>UNITED KINGDOM · CHINA · MALAYSIA | **PROCESS DATA SHEET VERTICAL VESSEL** |
| LOCATION: | Cassel Works, New Road, Billingham TS23 1LE | | |
| SERVICE: | AMS crystallizer | | |
| PROJECT: | Hydrogen Cyanide and AMS Plant Replacement | | UNIT NO.: EV-001 |
| JOB NO.: | 2022-001 | | ITEM NO.: EV-001 NO. REQD.: 1 |
| GROUP NO.: | 6 | | |

REV **PROCESS DATA**

**FLUID DATA**

| | | |
|---|---|---|
| Description | : | The purpose of the stage: to get the ammonium sulfate crystal by using EV-001, and evapore HCl |
| Flammable / Explosive | : | Yes / No |
| Toxic | : | Yes |
| Corrosive/erosive due to | : | the ammonium sulfate solution is acidic |

**OPERATING CONDITIONS**

| | | |
|---|---|---|
| Operating Pressure, barg | | -0.2 |
| Operating Temperature, °C | : | 80 |

**Streams of EV-001**

| **Design case** | Units | Maximum | Minimum | Case 3 | Case 4 | Case 5 | Case 6 | Case 7 |
|---|---|---|---|---|---|---|---|---|
| **Steam Data** | | | | | | | | |
| Mass Flow rate | kg/h | 7943.88 | 939.23 | | | | | |
| Density | kg/m3 | 10.07 | 10.07 | | | | | |
| Viscosity | cP | 0.115 | 0.115 | | | | | |
| Molecular weight ($H_2O$) | kg/kgmol | 18 | 18 | | | | | |
| **36.1wt% Ammonium sulfate flow in** | | | | | | | | |
| Mass Flow rate | kg/h | 25789.62 | 2951.84 | | | | | |
| Density | kg/m3 | 1185 | 1185 | | | | | |
| Viscosity | cP | 42 | 42 | | | | | |
| Surface tension | dyne/cm | 0.021 | 0.021 | | | | | |
| Molecular weight ( $H_2O$) | kg/kgmol | 18 | 18 | | | | | |
| Molecular weight ($(NH_4)_2SO_4$) | kg/kgmol | 132 | 132 | | | | | |
| **Ammonium sulfate slurry flow out** | | | | | | | | |
| Mass Flow rate | kg/h | 12288.43 | 1406.51 | | | | | |
| Density | kg/m3 | 1200.4 | 1200.4 | | | | | |
| Viscosity | cP | N/A | N/A | | | | | |
| Surface tension | dyne/cm | N/A | N/A | | | | | |
| Molecular weight($H_2O$) | kg/kgmol | 18 | 18 | | | | | |
| Molecular weight ($(NH_4)_2SO_4$) | kg/kgmol | 132 | 132 | | | | | |

Notes: Infromation of Steam:

steam pressure:20 barg

steam temperature:210 °C

Infromation of 36.1wt% ammonium sulfate:

Ammonium sulfate solution ( 36.1 wt % ammonium sulfate and 63.9 wt% water)

Ammonium sulfate solution Temperature : 75 °C

Ammonium sulfate solution pressure : 0.6 barg

Information of Ammonium sulfate slurry

Ammonium sulfate slurry : 11.5 wt% Ammonium sulfate crystal, 41.6wt% Ammonium sulfate, 46.9wt% water

Ammonium sulfate slurry temperature: 80 °C

Ammonium sulfate slurry pressure: 0.6 barg

| REV. | DESCRIPTION | DATE | BY | CHECK | APPROVED | DOCUMENT NO. |
|---|---|---|---|---|---|---|
| 1 | Final draft | 4/27/2022 | WLS | WYK | WYK/SJJ | EV-001 |
| | | | | | | SHEET 2 OF 2 |

The University of Nottingham

UNITED KINGDOM · CHINA · MALAYSIA

## 6.20 CM-001

| | | | |
|---|---|---|---|
| CLIENT: | Lucite | The University of Nottingham<br>UNITED KINGDOM · CHINA · MALAYSIA | **PROCESS DATA SHEET**<br>**STORAGE TANK** |
| LOCATION: | Cassel Works, New Road, Billingham TS23 1LE | | |
| SERVICE: | Compressure | | |
| PROJECT: | Hydrogen Cyanide and AMS Plant Replacement | | UNIT NO.: CM-001 |
| JOB NO.: | 2022-001 | | ITEM NO.: CM-001 NO. REQD.: 1 |
| GROUP NO.: | 6 | | |

TYPE : THERMAL INSULATION :

**SKETCH**

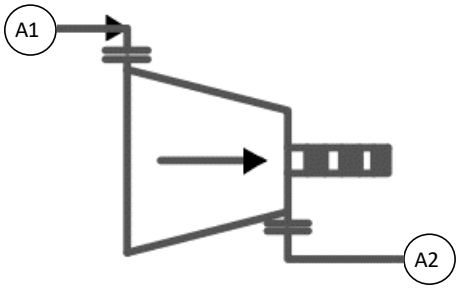


| **PROCESS DATA** | | | | **MATERIALS** | | | **FLUID** |
|---|---|---|---|---|---|---|---|
| Operating pressure | barg | : | 29 | SHELL | : | CS | H2O 180767 kg/h |
| Design pressure | barg | | 32 | INTERNALS | : | 316 SS | LM4 97336 kg/h |
| Operating temperature | °C | : | 24/77 | CORROSION | | | Total coolant 278103 kg/h |
| Design temperature | °C | | 49/102 | ALLOWANCE mm | : | 1.5 | |
| Corrosive / Erosive | yes / no / due to | | no | | | | |
| Toxic / Flammable | yes / no / due to | | no | | | | |
| Dimension L:W:H | m | : | 2:0.5:1.5 | | | | |

**NOZZLE CONNECTIONS SUMMARY**

| NO. | SIZE | FLANGE FINISH | RATING | SERVICE |
|---|---|---|---|---|
| A1 | 8" | RF | 150# | Coolant Input |
| A2 | 12" | RF | 400# | Compressed coolant Output |

**NOTES**

This is part of carnot cycle to cool down the coolant

| REV. | DESCRIPTION | DATE | BY | CHECK | APPROVED | DOCUMENT NO. |
|---|---|---|---|---|---|---|
| 1 | Final draft | 4/25/2022 | GYA | SJJ | SJJ/CZY | CM-001 |
| | | | | | | SHEET 1 OF 1 |

## 6.21 CT-001

| | | | |
|---|---|---|---|
| CLIENT: | Lucite | The University of Nottingham<br>UNITED KINGDOM · CHINA · MALAYSIA | **CALCULATION SHEET** |
| LOCATION: | assel Works, New Road, Billingham TS23 1E | | |
| SERVICE: | Centrifuge | | |
| PROJECT: | /drogen Cyanide and AMS Plant Replaceme | | DCUMENT NO.: CT-001 |
| JOB NO.: | 2022-001 | | QUIPMENT ITEM NO.:E\ CT-001 |
| GROUP NO.: | 6 | | GROUP NO.: 6 |

**Objectives:**

To separate the ammonium sulfate crystal from the ammonium sulfate sluury

**Input Documents:**

| Document Title | Doc. Number | Rev. | Date |
|---|---|---|---|
| Mass balance document (Maximum) | 1 | 1 | 4/27/2022 |
| Mass balance document (Minimum) | 2 | 1 | 4/27/2022 |
| | | | |
| | | | |
| | | | |
| | | | |
| | | | |
| | | | |

**Assumptions:**

The length/inside diamter =1.71

The thickness is 95mm

**Summary of Results:**

The inside diameter of CT-001 is 1440mm

The tan to tan length of CT-001 is 2500mm

The thickness of CT-001 is 95mm

The total volume of CT-001 is 4 m3

The outside diameter is 1550 mm

The power of motor is 15 KW

The total length of CT-001 is 2700 mm

The rotational speed is 6610 rpm

| REV. | DESCRIPTION | DATE | BY | CHECK | APPROVED | DOCUMENT NO. |
|---|---|---|---|---|---|---|
| 1 | Final draft | 4/25/2022 | GYA | SJJ | SJJ/CZY | CT-001 |
| | | | | | | |
| | | | | | | |
| | | | | | | PAGE 1 OF 3 |

The University of Nottingham

UNITED KINGDOM · CHINA · MALAYSIA

| | | | |
|---|---|---|---|
| CLIENT: | Lucite | The University of Nottingham<br>UNITED KINGDOM · CHINA · MALAYSIA | **PROCESS DATA SHEET**<br>**HORIZONTAL VESSEL** |
| LOCATION: | assel Works, New Road, Billingham TS23 1L | | |
| SERVICE: | Centrifuge | | |
| PROJECT: | rdrogen Cyanide and AMS Plant Replaceme | | UNIT NO.: CT-001 |
| JOB NO.: | 2022-001 | | ITEM NO.: CT-001 NO. REQD.: 1 |
| GROUP NO.: | 6 | | |

REV.

**PROCESS SKETCH**

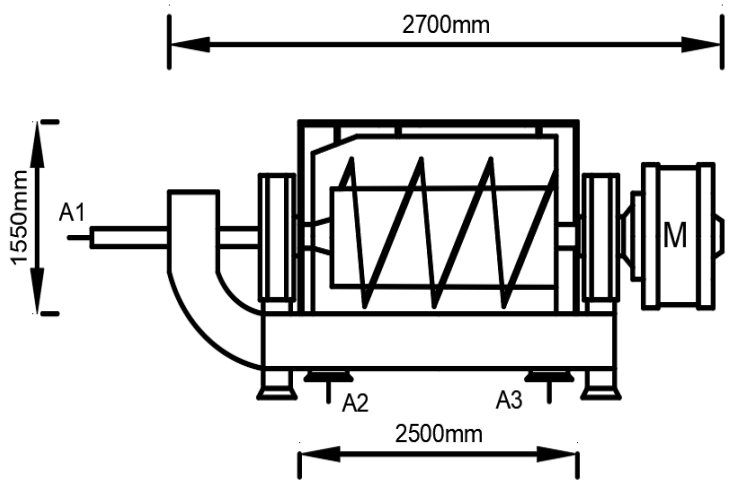


**CT-001**

**MECHANICAL DESIGN DATA**

| | | | | | | | |
|---|---|---|---|---|---|---|---|
| Design Pressure | barg | : | 1 | Insulation Type | | : | H |
| Vacuum design condition | Press bara : | N/A | Temp. °C : N/A | Insulation Thickness | mm | : | By others |
| Pressure drop through internals | bar | : | 0.1 | Corrosion Allowance | mm | : | 1.5 |
| Maximum Design Temperature | °C | : | 60 | Stress relieved (process reasons) | | : | Yes |
| Minimum Design Temperature | °C | : | 40 | Inside Diameter | mm | : | 1440 |
| Minimum Ambient Temperature | °C | : | 10 | Tan/Tan Length | mm | : | 2500 |
| Steamout conditions | Press barg : | NONE | Temp °C : N/A | Total Volume | m3 | : | 4 |
| Corrosion Allowance | mm | : | 1.5 | | | | |

**MATERIALS OF CONSTRUCTION**

| | |
|---|---|
| Shell Plate : 304ss | Internals : 304SS |
| Head Plate : 304 SS | |

**NOZZLE CONNECTION SUMMARY**

| No. | SIZE DN | FLANGE FINISH | RATING | SERVICE |
|---|---|---|---|---|
| A1 | 15 | RF | 150# | B |
| A2 | 15 | RF | 150# | B |
| A3 | 20 | RF | 150# | B |

**INTERNALS**

The outside diameter is 1550 mm

The rotational speed is 6610 rpm

**NOTES:**

The power of motor is 15 KW

The weight of the quipment is 1832 kg

The G force is 10619 N

M is motor

The total length ( motor included) is 2700 mm

| REV. | DESCRIPTION | DATE | BY | CHECK | APPROVED | DOCUMENT NO. |
|---|---|---|---|---|---|---|
| 1 | Final draft | 4/25/2022 | GYA | SJJ | SJJ/CZY | CT-001 |
| | | | | | | |
| | | | | | | SHEET 2 OF 3 |

The University of Nottingham

UNITED KINGDOM · CHINA · MALAYSIA

| | | | |
|---|---|---|---|
| CLIENT: | Lucite | The University of Nottingham<br>UNITED KINGDOM · CHINA · MALAYSIA | **PROCESS DATA SHEET** |
| LOCATION: | Cassel Works, New Road, Billingham TS23 1LE | | |
| SERVICE: | Centrifuge | | |
| PROJECT: | Hydrogen Cyanide and AMS Plant Replacement | | UNIT NO.: CT-001 |
| JOB NO.: | 2022-001 | | ITEM NO.: CT-001 NO. REQD.: 1 |
| GROUP NO.: | 6 | | |

REV **PROCESS DATA**

**FLUID DATA**

| | | |
|---|---|---|
| Description | : | The fluid contains ammonium sulfate and water |
| Flammable/Explosive | : | No/No |
| Toxic | : | Yes |
| Corrosive/erosive due to | : | The fluid contains ammonium sulfate and water, which is acidic solution |

OPERATING CONDITIONS

| | | | |
|---|---|---|---|
| Operating Pressure | barg | : | 1 |
| Operating Temperature | °C | : | 50 |

Separator Outlet Streams

| **Design case** | Units | Maximum | Minimum | Case 3 | Case 4 | Case 5 | Case 6 | Case 7 |
|---|---|---|---|---|---|---|---|---|
| **Ammonium sulfate slurry entering (A1)** | | | | | | | | |
| Mass Flow rate | kg/h | 12288.43 | 1406.51 | | | | | |
| Density | kg/m3 | 1200.4 | 1200.4 | | | | | |
| Volumetric flow rate | $m^3/h$ | 10.24 | 0.85 | | | | | |
| Viscosity | cP | N/A | N/A | | | | | |
| Surface tension | dyne/cm | N/A | N/A | | | | | |
| Molecular weight ($H_2O$) | kg/kgmol | 18 | 18 | | | | | |
| Molecular weight ($(NH_4)SO_4$) | kg/kgmol | 132 | 132 | | | | | |
| **Slurry flow into Dryer (A3)** | | | | | | | | |
| Mass Flow rate | kg/h | 3588.66 | 410.75 | | | | | |
| Density | kg/m3 | 1600 | 1600 | | | | | |
| Volumetric flow rate | $m^3/h$ | 2.24 | 0.26 | | | | | |
| Viscosity | cP | N/A | N/A | | | | | |
| Surface tension | dyne/cm | N/A | N/A | | | | | |
| Molecular weight ($H_2O$) | kg/kgmol | 18 | 18 | | | | | |
| Molecular weight ($(NH_4)SO_4$) | kg/kgmol | 132 | 132 | | | | | |
| **Recycled Liquid Data (A2)** | | | | | | | | |
| Mass Flow rate | kg/h | 8699.77 | 995.76 | | | | | |
| Density | kg/m3 | 1255 | 1255 | | | | | |
| Volumetric flow rate | $m^3/h$ | 6.93 | 0.79 | | | | | |
| Viscosity | cP | 42 | 42 | | | | | |
| Surface tension | dyne/cm | 0.021 | 0.021 | | | | | |
| Molecular weight ($H_2O$) | kg/kgmol | 18 | 18 | | | | | |
| Molecular weight ($(NH_4)SO_4$) | kg/kgmol | 132 | 132 | | | | | |

Notes:

The temperature of above streams is 50 °C

The ammonium sulfate slurry entering pressure is 0.6 bar

| REV. | DESCRIPTION | DATE | BY | CHECK | APPROVED | DOCUMENT NO. |
|---|---|---|---|---|---|---|
| 1 | Final draft | 4/25/2022 | GYA | SJJ | SJJ/CZY | CT-001 |
| | | | | | | SHEET 3 OF 3 |

The University of Nottingham

UNITED KINGDOM · CHINA · MALAYSIA

## 6.22 D-001

| | | | |
|---|---|---|---|
| CLIENT: | Lucite | The University of Nottingham<br>UNITED KINGDOM · CHINA · MALAYSIA | **CALCULATION SHEET** |
| LOCATION: | assel Works, New Road, Billingham TS23 1L | | |
| SERVICE: | Centrifuge | | |
| PROJECT: | rdrogen Cyanide and AMS Plant Replaceme | | DCUMENT NO.: D-001 |
| JOB NO.: | 2022-001 | | QUIPMENT ITEM NO.: D-001 |
| GROUP NO.: | 6 | | GROUP NO.: 6 |

**Objectives:**

To increase the concentration of ammonium sulfate crystal

**Input Documents:**

| Document Title | Doc. Number | Rev. | Date |
|---|---|---|---|
| Mass balance (Max flow rate) | 1 | | |
| Mass balance (Max flow rate) | 2 | | |
| | | | |
| | | | |
| | | | |
| | | | |
| | | | |
| | | | |

**Assumptions:**

The length/inside diamter = 9.93

The thickness is 45mm

The residence time is 0.6 hr

**Summary of Results:**

The inside diameter of D-001 is 705mm

The tan to tan length of D-001 is 7000mm

The thickness of D-001 is 45mm

The total volume of D-001 is 2.73 $m^3$

The total length is 7500 mm

| REV. | DESCRIPTION | DATE | BY | CHECK | APPROVED | DOCUMENT NO. |
|---|---|---|---|---|---|---|
| 1 | Final draft | 4/25/2022 | GYA | SJJ | SJJ/CZY | D-001 |
| | | | | | | |
| | | | | | | PAGE 1 OF 3 |

The University of Nottingham

UNITED KINGDOM · CHINA · MALAYSIA

| | | | |
|---|---|---|---|
| CLIENT: | Lucite | The University of Nottingham<br>UNITED KINGDOM · CHINA · MALAYSIA | **PROCESS DATA SHEET**<br>**HORIZONTAL VESSEL** |
| LOCATION: | assel Works, New Road, Billingham TS23 1L | | |
| SERVICE: | Centrifuge | | |
| PROJECT: | drogen Cyanide and AMS Plant Replaceme | | UNIT NO.: D-001 |
| JOB NO.: | 2022-001 | | ITEM NO.: D-001 NO. REQD.: 1 |
| GROUP NO.: | 6 | | |

REV.

**PROCESS SKETCH**

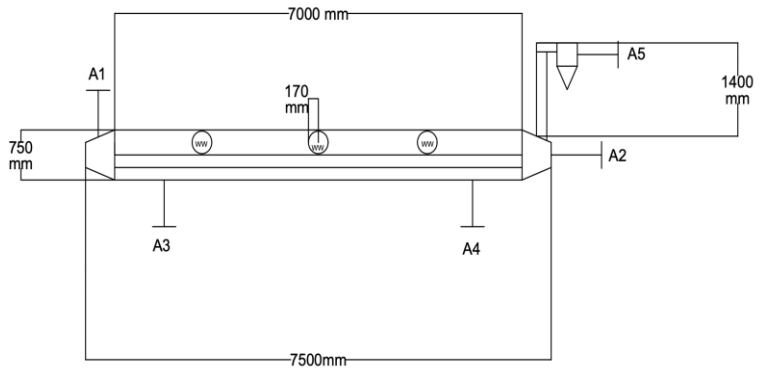


**D-001**

**MECHANICAL DESIGN DATA**

| | | | | | | | |
|---|---|---|---|---|---|---|---|
| Design Pressure | barg | : | 1 | Insulation Type | | : | H |
| Vacuum design condition | Press bara : | N/A | Temp. °C : N/A | Insulation Thickness | mm | : | By others |
| Pressure drop through internals | bar | : | 0.1 | Corrosion Allowance | mm | : | 1.5 |
| Maximum Design Temperature | °C | : | 100 | Stress relieved (process reasons) | | : | Yes |
| Minimum Design Temperature | °C | : | 50 | Inside Diameter | mm | : | 705 |
| Minimum Ambient Temperature | °C | : | 10 | Tan/Tan Length | mm | : | 7000 |
| Steamout conditions | Press barg : | NONE | Temp °C : N/A | Total Volume | m3 | : | 2.73 |
| Corrosion Allowance | mm | : | 1.5 | | | | |

**MATERIALS OF CONSTRUCTION**

| | |
|---|---|
| Shell Plate : 304ss | Internals : 304SS |
| Head Plate : 304 SS | |

**NOZZLE CONNECTION SUMMARY**

| No. | SIZE DN | FLANGE FINISH | RATING | SERVICE |
|---|---|---|---|---|
| A1 | 25 | RF | 150# | B |
| A2 | 25 | RF | 150# | B |
| A3 | 450 | RTJ | 150# | A |
| A4 | 450 | RTJ | 150# | A |
| A5 | 800 | RTJ | 150# | A |

**INTERNALS**

The inside diameter is 705 mm

The thickness of D-001 is 45 mm

Fluidization area is 5.625 $m^2$

**NOTES:**

The power of motor is 52 KW

The weight of the quipment is 5000 kg

The D-001 outdiamter is 750mm

The total length of D-001 is 7500mm

Watch window (WW) diameter is 340 mm

| REV. | DESCRIPTION | DATE | BY | CHECK | APPROVED | DOCUMENT NO. |
|---|---|---|---|---|---|---|
| 1 | Final draft | 4/25/2022 | GYA | SJJ | SJJ/CZY | D-001 |
| | | | | | | SHEET 1 OF 3 |

The University of Nottingham

UNITED KINGDOM · CHINA · MALAYSIA

| | | | |
|---|---|---|---|
| CLIENT: | Lucite | The University of Nottingham<br>UNITED KINGDOM · CHINA · MALAYSIA | **PROCESS DATA SHEET** |
| LOCATION: | Cassel Works, New Road, Billingham TS23 1LE | | |
| SERVICE: | Centrifuge | | |
| PROJECT: | Hydrogen Cyanide and AMS Plant Replacement | | UNIT NO.: D-001 |
| JOB NO.: | 2022-001 | | ITEM NO.: D-001 NO. REQD.: 1 |
| GROUP NO.: | 6 | | |

REV **PROCESS DATA**

**FLUID DATA**

| | | | |
|---|---|---|---|
| Description | : | The purpose is increase the concentration of ammonium sulfate crystal | |
| Flammable/Explosive | : | | No/No |
| Toxic | : | | Yes |
| Corrosive/erosive due to | : | Vapor that will cause corrosion to the equipment | |

OPERATING CONDITIONS

| | | | |
|---|---|---|---|
| Operating Pressure | barg | : | 1 |
| Operating Temperature | °C | : | 75 |

Streams

| **Design case** | Units | Maximum | Minimum | Case 3 | Case 4 | Case 5 | Case 6 | Case 7 |
|---|---|---|---|---|---|---|---|---|
| **Vapor Data** | | | | | | | | |
| Mass Flow rate | kg/h | 1147.84 | 131.38 | | | | | |
| Density | kg/m3 | 1200.4 | 1200.4 | | | | | |
| Volumetric flow rate | $m^3/h$ | 0.96 | 9.14 | | | | | |
| Viscosity | cP | N/A | N/A | | | | | |
| Surface tension | dyne/cm | N/A | N/A | | | | | |
| Molecular weight ($H_2O$) | kg/kgmol | 18 | 18 | | | | | |
| **Slurry flow into Dryer** | | | | | | | | |
| Mass Flow rate | kg/h | 3588.66 | 410.75 | | | | | |
| Density | kg/m3 | 1600 | 1600 | | | | | |
| Volumetric flow rate | $m^3/h$ | 2.24 | 0.26 | | | | | |
| Viscosity | cP | N/A | N/A | | | | | |
| Surface tension | dyne/cm | N/A | N/A | | | | | |
| Molecular weight ($H_2O$) | kg/kgmol | 18 | 18 | | | | | |
| Molecular weight ($(NH_4)SO_4$) | kg/kgmol | 132 | 132 | | | | | |
| **Ammonium sulfate crystal** | | | | | | | | |
| Mass Flow rate | kg/h | 2440.82 | 279.37 | | | | | |
| Density | kg/m3 | 1760 | 1760 | | | | | |
| Volumetric flow rate | $m^3/h$ | 1.39 | 0.16 | | | | | |
| Viscosity | cP | N/A | N/A | | | | | |
| Surface tension | dyne/cm | N/A | N/A | | | | | |
| Molecular weight ($H_2O$) | kg/kgmol | 18 | 18 | | | | | |
| Molecular weight ($(NH_4)SO_4$) | kg/kgmol | 132 | 132 | | | | | |

Notes:

Information of Hot air in :

Pressure: 1 barg

Temperature:75 °C

Mass flow rate: Maximun: 12106.68 kg/h Minimum: 1385.7 kg/h

Information of cold air out :

Pressure: 1 barg

Temperature:25 °C

Mass flow rate: Maximun: 6053.34 kg/h Minimum: 692.85 kg/h

Information of released gas:

Pressure: 1 barg

Temperature:60 oC

Mass flow rate: Maximum: 19307.85 kg/h Minimum: 2209. 94 kg/h

Information of ammonium sulfate crystal :

Ammonium sulfate product mass fraction is 99.8 wt%

| REV. | DESCRIPTION | DATE | BY | CHECK | APPROVED | |
|---|---|---|---|---|---|---|
| 1 | Final draft | 4/25/2022 | GYA | SJJ | SJJ/CZY | D-001 |
| | | | | | | SHEET 2 OF |

The University of Nottingham

UNITED KINGDOM · CHINA · MALAYSIA

## 6.23 MT-001

| | | | |
|---|---|---|---|
| CLIENT: | Lucite | The University of Nottingham<br>UNITED KINGDOM · CHINA · MALAYSIA | **PROCESS DATA SHEET**<br>**VERTICAL VESSEL** |
| LOCATION: | Cassel Works, New Road, Billingham TS23 1LE | | |
| SERVICE: | Mixing tank | | |
| PROJECT: | Hydrogen Cyanide and AMS Plant Replacement | | UNIT NO.: MT-001 |
| JOB NO.: | 2022-001 | | ITEM NO.: MT-001 NO. REQD.: 1 |
| GROUP NO.: | 6 | | |

REV.

**PROCESS SKETCH**

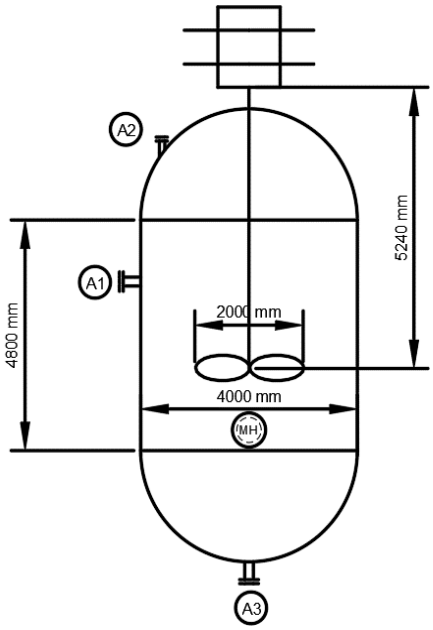


**MECHANICAL DESIGN DATA**

| | | | | |
|---|---|---|---|---|
| Design Pressure | | barg | : | 0.5 |
| Vacuum design condition | Press bara : | None | @ Temp °C : | 25 |
| Pressure drop through internals | | bar | : | 0.5 |
| Maximum Design Temperature | | °C | : | 50 |
| Minimum Design Temperature | | °C | : | 0 |
| Minimum Ambient Temperature | | °C | : | -10 |
| Steamout conditions | Press barg : | None | @ Temp °C : | N/A |
| Corrosion Allowance | | mm | : | 1.5 |
| Insulation Type | | | : | PP |
| Insulation Thickness | | mm | : | 0.8 |
| Stress relieved (process reasons) | | | : | Yes |
| Inside Diameter | | mm | : | 4000 |
| Tan/Tan Length | | mm | : | 4800 |
| Head Type | | | : | Semi-elliptical |
| Total Volume | | m3 | : | 60 |

**MATERIALS OF CONSTRUCTION**

| | | |
|---|---|---|
| Shell Plate | : | 304 SS |
| Head Plate | : | 304 SS |
| Internals | : | 304 SS |

**CONNECTION DETAILS**

| No. | SIZE DN | FLANGE FINISH | FLANGE RATING | SERVICE |
|---|---|---|---|---|
| A1 | 125 | RF | 150# | A |
| A2 | 200 | RF | 150# | A |
| A3 | 200 | RF | 150# | A |

**INTERNALS DETAILS**

There's a blender inside, and the impeller diameter is 2 m, and the shaft of blender is 5.24 m, and the power requirement for impeller is 35260 W.

**NOTES:**

A man hole should be added, and its diameter is about 1000 mm.

According to the requirement about the accuracy of the data provided datasheets the volume is rounded up to 2 significant figures, and the linear dimensions (mm) is rounded up to the nearest 50 mm for small (less than 2000 mm diameter) vesse and to 100 mm for large diameter vessels.

| REV. | DESCRIPTION | DATE | BY | CHECK | APPROVED | DOCUMENT NO. |
|---|---|---|---|---|---|---|
| 1 | Final draft | 4/25/2022 | GYA | SJJ | SJJ/CZY | MT-001 |
| | | | | | | |
| | | | | | | |
| | | | | | | SHEET 1 OF 2 |

The University of Nottingham

UNITED KINGDOM · CHINA · MALAYSIA

| | | | |
|---|---|---|---|
| CLIENT: | Lucite | The University of Nottingham<br>UNITED KINGDOM · CHINA · MALAYSIA | **PROCESS DATA SHEET**<br>**VERTICAL VESSEL** |
| LOCATION: | Cassel Works, New Road, Billingham TS23 1LE | | |
| SERVICE: | Mixing tank | | |
| PROJECT: | Hydrogen Cyanide and AMS Plant Replacement | | UNIT NO.: MT-001 |
| JOB NO.: | 2022-001 | | ITEM NO.: MT-001 NO. REQD.: 1 |
| GROUP NO.: | 6 | | |

REV **PROCESS DATA**

**FLUID DATA**

| | | |
|---|---|---|
| Description | : | Coolant (LM4) |
| Flammable / Explosive | : | Yes / No |
| Toxic | : | No |
| Corrosive/erosive due to | : | It is noncorrosive in nature. |

**OPERATING CONDITIONS**

| | | |
|---|---|---|
| Operating Pressure, barg | : | 0.5 |
| Operating Temperature, °C | : | 25 |

**Separator Outlet Streams**

| **Design case** | Units | Case 1 | Case2 | Case 3 | Case 4 | Case 5 | Case 6 | Case 7 |
|---|---|---|---|---|---|---|---|---|
| **A1 Inlet Data** | | | | | | | | |
| Mass Flow rate | kg/h | 97335.8 | 943.5 | | | | | |
| Density | kg/m3 | 1035 | 1035 | | | | | |
| Viscosity | cP | 12.5 | 12.5 | | | | | |
| Molecular weight | kg/kgmol | N/A | N/A | | | | | |
| **A2 Inlet Data** | | | | | | | | |
| Mass Flow rate | kg/h | 180766.6 | 20690 | | | | | |
| Density | kg/m3 | 1000 | 1000 | | | | | |
| Viscosity | cP | 2.98 | 2.98 | | | | | |
| Molecular weight | kg/kgmol | 18 | 18 | | | | | |
| **A3 Inlet Data** | | | | | | | | |
| Mass Flow rate | kg/h | 278102.4 | 31831 | | | | | |
| Density | kg/m3 | 1012 | 1012 | | | | | |
| Viscosity | cP | 6.31 | 6.31 | | | | | |
| Molecular weight | kg/kgmol | N/A | N/A | | | | | |

Notes: During the whole operation of the system, the flow rates of vapour and liquid are between case 1 and case 2. The properties of vapour phase and liquid phase are also between case 1 and case 2.

| REV. | DESCRIPTION | DATE | BY | CHECK | APPROVED | DOCUMENT NO. |
|---|---|---|---|---|---|---|
| 1 | Final draft | 4/25/2022 | GYA | SJJ | SJJ/CZY | MT-001 |
| | | | | | | |
| | | | | | | |
| | | | | | | SHEET 2 OF 2 |

## 6.24 MT-002

| | |
|---|---|
| CLIENT: | Lucite |
| LOCATION: | assel Works, New Road, Billingham TS23 1I |
| SERVICE: | Mixing tank |
| PROJECT: | rdrogen Cyanide and AMS Plant Replaceme |
| JOB NO.: | 2022-001 |
| GROUP NO.: | 6 |

The University of Nottingham
UNITED KINGDOM · CHINA · MALAYSIA

**PROCESS DATA SHEET**
**VERTICAL VESSEL**

| | | | |
|---|---|---|---|
| UNIT NO.: | MT-002 | | |
| ITEM NO.: | MT-002 | NO. REQD.: | 1 |

REV

**PROCESS SKETCH**

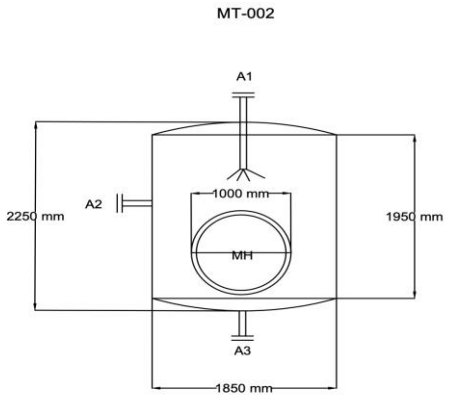


**MECHANICAL DESIGN DATA**

| | | | | |
|---|---|---|---|---|
| Design Pressure | | barg | : | 0.2 |
| Vacuum design condition | Press bara : | None | @ Temp °C : | N/A |
| Pressure drop through internals | | bar | : | 0.2 |
| Maximum Design Temperature | | °C | : | 100 |
| Minimum Design Temperature | | °C | : | 50 |
| Minimum Ambient Temperature | | °C | : | -10 |
| Steamout conditions | Press barg : | None | @ Temp °C : | N/A |
| Corrosion Allowance | | mm | : | 3.0 |
| Insulation Type | | | : | PP |
| Insulation Thickness | | mm | : | 0.8 |
| Stress relieved (process reasons) | | | : | Yes |
| Inside Diameter | | mm | : | 1844 |
| Tan/Tan Length | | mm | : | 1900 |
| Head Type | | | : | Semi-elliptical |
| Total Volume | | m3 | : | 5 |

**MATERIALS OF CONSTRUCTION**

| | | |
|---|---|---|
| Shell Plate | : | 316 SS |
| Head Plate | : | 316 SS |
| Internals | : | 316 SS |

**CONNECTION DETAILS**

| No. | SIZE DN | FLANGE FINISH | FLANGE RATING | SERVICE |
|---|---|---|---|---|
| A1 | 15 | RF | 150# | B |
| A2 | 8 | RTJ | 150# | D |
| A3 | 15 | RF | 150# | B |

**INTERNALS DETAILS**

The sprayer is added in the tank

**NOTES:**

A man hole should be added, and its diameter is about 1000 mm.
The total length is 2250 mm
The outside diameter is 1850mm

| REV. | DESCRIPTION | DATE | BY | CHECK | APPROVED | DOCUMENT NO. |
|---|---|---|---|---|---|---|
| 1 | Final draft | 4/25/2022 | GYA | SJJ | SJJ/CZY | MT-002 |
| | | | | | | SHEET 1 OF 2 |

The University of Nottingham

UNITED KINGDOM · CHINA · MALAYSIA

| | | | |
|---|---|---|---|
| CLIENT: | Lucite | The University of Nottingham<br>UNITED KINGDOM · CHINA · MALAYSIA | **PROCESS DATA SHEET**<br>**VERTICAL VESSEL** |
| LOCATION: | Cassel Works, New Road, Billingham TS23 1LE | | |
| SERVICE: | Mixing tank | | |
| PROJECT: | Hydrogen Cyanide and AMS Plant Replacement | | UNIT NO.: MT-002 |
| JOB NO.: | 2022-001 | | ITEM NO.: MT-002 NO. REQD.: 1 |
| GROUP NO.: | 6 | | |

REV **PROCESS DATA**

**FLUID DATA**

| | | |
|---|---|---|
| Description | : | To adjust the pH of the AMS solution and decrese the concentration of sulfuric acid solution |
| Flammable / Explosive | : | No / No |
| Toxic | : | Yes |
| Corrosive/erosive due to | : | The AMS solution is acidic |

**OPERATING CONDITIONS**

| | | |
|---|---|---|
| Operating Pressure, barg | : | 0.2 |
| Operating Temperature, °C | : | 75 |

**Separator Outlet Streams**

| **Design case** | Units | Maximum | Minimum | Case 3 | Case 4 | Case 5 | Case 6 | Case 7 |
|---|---|---|---|---|---|---|---|---|
| **A1 Inlet Data** | | | | | | | | |
| Mass Flow rate | kg/h | 12256.2 | 1402.8 | | | | | |
| Density | kg/m3 | 1125 | 1125 | | | | | |
| Viscosity | cP | 40 | 40 | | | | | |
| Molecular weight ($H_2O$) | kg/kgmol | 18 | 18 | | | | | |
| Molecular weight ($(NH_4)SO_4$) | kg/kgmol | 18 | 18 | | | | | |
| Molecular weight ($H_2SO_4$) | kg/kgmol | 98 | 98 | | | | | |
| **A2 Inlet Data** | | | | | | | | |
| Mass Flow rate | kg/h | 37.2 | 4.3 | | | | | |
| Density | kg/m3 | 762.5 | 762.5 | | | | | |
| Viscosity | cP | 0.009 | 0.009 | | | | | |
| Molecular weight | kg/kgmol | 17 | 17 | | | | | |
| **A3 Outlet Data** | | | | | | | | |
| Mass Flow rate | kg/h | 12293.4 | 1407.1 | | | | | |
| Density | kg/m3 | 1185 | 1185 | | | | | |
| Viscosity | cP | 42 | 42 | | | | | |
| Molecular weight ($(NH_3)SO$ | kg/kgmol | 132 | 132 | | | | | |
| Molecular weight ($H_2O$) | kg/kgmol | 18 | 18 | | | | | |
| Molecular weight (HCN) | kg/kgmol | 27 | 27 | | | | | |

Notes: The residence time is assumed that is 0.25 hr

A2 is ammonia feed

| REV. | DESCRIPTION | DATE | BY | CHECK | APPROVED | DOCUMENT NO. |
|---|---|---|---|---|---|---|
| 1 | Final draft | 4/25/2022 | GYA | SJJ | SJJ/CZY | |
| | | | | | | MT-002 |
| | | | | | | SHEET 2 OF 2 |

## 6.25 FN-001

| Rev | PUMP TYPE | : | Horizontal Centrifugal | PUMP DRIVER TYPE | : | Electric Motor 4-pole |
|---|---|---|---|---|---|---|

### FLUID DATA

| | | | | | |
|---|---|---|---|---|---|
| Name | : | Waste gas from furnace | SP.GR (flowing) | : | 0.0008038 |
| Composition | : | 65% wt N2, 28% wt CO2, 6% wt H2O | Corrosive / Erosive | : | No / No due to |
| 1%NO2 | | | Toxic / Flammable | : | Yes / No due to NO2 |

### OPERATING DATA

| FLOW CASE | | | | NORMAL | RATED | MINIMUM | OTHER |
|---|---|---|---|---|---|---|---|
| Pumping temp. | : | Normal | °C | 153 | 160 | 120 | |
| Vapour pressure @ P.T.(max) | : | | bara | 3 | 3.5 | 2.64 | |
| Viscosity @ P.T. | : | | cP | 0.0229 | 0.0229 | 0.0229 | |
| Capacity @ P.T. | : | | $m^3/h$ | 212500 | 236810 | 24310 | |
| NPSH (available) | : | | m | 18.6 | 20 | 15.7 | |
| Suction pressure | : | Normal | barg | -0.5 | | | |
| | | Maximum | barg | -0.3 | | | |
| Discharge pressure | : | | barg | 0 | | | |
| Differential head | : | | m | 10.456 | | | |
| System design pressure | | | barg | 1 | | | |

### ADDITIONAL PUMP DATA

| | | | | | | |
|---|---|---|---|---|---|---|
| Materials of Construction | : | Casing | - | 304 SS | Special Seal Requirements | : |
| | | Internals | - | 304 SS | | |
| Efficiency (assumed) | : | 70 | | | | |
| Pump cooling/heating jacket required | : | Yes | | | | |

### NOZZLE CONNECTION SUMMARY

| Number | Size Inch NB | Flange Finish | Flange Rating | Service |
|---|---|---|---|---|
| A1 | 64" | RTJ | 150# | SUCTION |
| A2 | 64" | RTJ | 150# | DISCHARGE |
| | | - | | |
| | | - | | |

### PROCESS NOTES

The efficency of the fan was assumed to be 70%

### SKETCH

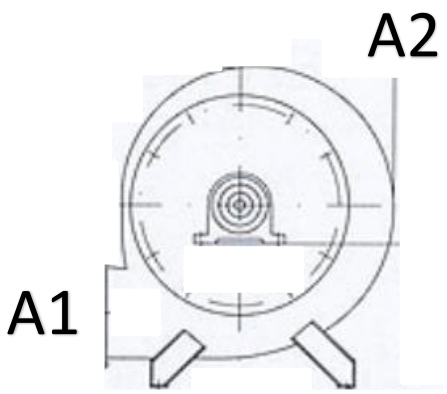

## 7. Appendix

Malab code for reactor

```
% Matlab code for determination of catalyst thickness

clc;
clear all;



e=1;
FNG=123*e;
FAIR=722*e;
FNH3=123*e;
FH2=0;
FN2=0.0391*FNG+0.789584*FAIR;
FCH4=0.958*FNG;
FHCN=0;
FO2=0.21*FAIR;
FNO=0;
FH2O=0;
FCO=0;
FCO2=0.003*FNG+0.000416*FAIR;

P0=750;
FT= FNH3+FH2+FN2+FCH4+FHCN+FO2+FNO+FH2O+FCO+FCO2;
mT=FNH3*0.017+FH2*0.002+FN2*0.028+FCH4*0.016+FHCN*0.027+FO2*0.032+FNO*0.03+
FH2O*0.018+FCO*0.028+FCO2*0.044;
[PNH3,PH2,PN2,PCH4,PHCN,PO2,PNO,PH2O,PCO,PCO2]=deal(FNH3/FT*P0,FH2/FT*P0,FN
2/FT*P0,FCH4/FT*P0,FHCN/FT*P0,FO2/FT*P0,FNO/FT*P0,FH2O/FT*P0,FCO/FT*P0,FCO2
/FT*P0);

tspan=linspace(0,0.2,1000000);


[Z,F]=ode15s(@Reactor,tspan,[PNH3,PH2,PN2,PCH4,PHCN,PO2,PNO,PH2O,PCO,PCO2])
;
plot(Z,F(:,1),Z,F(:,2),Z,F(:,3),Z,F(:,4),Z,F(:,5),Z,F(:,6),Z,F(:,7),Z,F(:,8
),Z,F(:,9),Z,F(:,10));


[PNH3,PH2,PN2,PCH4,PHCN,PO2,PNO,PH2O,PCO,PCO2] = deal( F(:,1), F(:,2),
F(:,3), F(:,4), F(:,5), F(:,6), F(:,7), F(:,8), F(:,9), F(:,10));

plot(Z,PNH3,Z,PH2,Z,PN2,Z,PCH4,Z,PHCN,Z,PO2,Z,PNO,Z,PH2O,Z,PCO,Z,PCO2);

[mX,I]=max(PHCN);
disp(mX);
disp(I);
legend('PNH3','PH2','PN2','PCH4','PHCN','PO2','PNO','PH2O','PCO','PCO2')
ylabel('PNH3,PH2,PN2,PCH4,PHCN,PO2,PNO,PH2O,PCO,PCO2')
```

```
poutlet
=[PNH3(I),PH2(I),PN2(I),PCH4(I),PHCN(I),PO2(I),PNO(I),PH2O(I),PCO(I),PCO2(I
)];
PI=PNH3(I)+PH2(I)+PN2(I)+PCH4(I)+PHCN(I)+PO2(I)+PNO(I)+PH2O(I)+PCO(I)+PCO2(
I);
[XNH3(I),XH2(I),XN2(I),XCH4(I),XHCN(I),XO2(I),XNO(I),XH2O(I),XCO(I),XCO2(I)
]=deal(PNH3(I)/PI,PH2(I)/PI,PN2(I)/PI,PCH4(I)/PI,PHCN(I)/PI,PO2(I)/PI,PNO(I
)/PI,PH2O(I)/PI,PCO(I)/PI,PCO2(I)/PI);
x=XHCN(I);
xoutlet=[XNH3(I),XH2(I),XN2(I),XCH4(I),XHCN(I),XO2(I),XNO(I),XH2O(I),XCO(I)
,XCO2(I)];
MF=XNH3(I)*0.017+XH2(I)*0.002+XN2(I)*0.028+XCH4(I)*0.016+XHCN(I)*0.027+XO2(
I)*0.032+XNO(I)*0.03+XH2O(I)*0.018+XCO(I)*0.028+XCO2(I)*0.044;

[mXNH3(I),mXH2(I),mXN2(I),mXCH4(I),mXHCN(I),mXO2(I),mXNO(I),mXH2O(I),mXCO(I
),mXCO2(I)]=deal(XNH3(I)*0.017/MF,XH2(I)*0.002/MF,XN2(I)*0.028/MF,XCH4(I)*0
.016/MF,XHCN(I)*0.027/MF,XO2(I)*0.032/MF,XNO(I)*0.03/MF,XH2O(I)*0.018/MF,XC
O(I)*0.028/MF,XCO2(I)*0.044/MF);

[mNH3(I),mH2(I),mN2(I),mCH4(I),mHCN(I),mO2(I),mNO(I),mH2O(I),mCO(I),mCO2(I)
]=deal(mT*mXNH3(I),mT*mXH2(I),mT*mXN2(I),mT*mXCH4(I),mT*mXHCN(I),mT*mXO2(I)
,mT*mXNO(I),mT*mXH2O(I),mT*mXCO(I),mT*mXCO2(I));

moutlet=[mNH3(I),mH2(I),mN2(I),mCH4(I),mHCN(I),mO2(I),mNO(I),mH2O(I),mCO(I)
,mCO2(I)];

b=0;
for j=1:1:10
b=b+poutlet(j);
end
function dF = Reactor(Z,F)

dF= zeros(10,1);
T=1350;

r1=(4.9E18*exp(-2130/T)*(F(1)))/((1+0.044*exp(2390/T)*(F(4))*(F(1))^-
0.5)^3);
r2=(7.8E18*exp(-
1950/T)*(F(4))*(F(1))^0.5)/((1+0.044*exp(2390/T)*(F(4))*(F(1))^-0.5)^4);
r3=2.1E16*exp(10850/T)*(F(1))*(F(6))^0.5/(1+4E-5*exp(12750/T)*(F(1)));
r4=1.48E17*exp(3875/T)*(F(7))*(F(1))^0.5/(1+5E-
5*exp(7950/T)*(F(7))+0.0145*exp(2880/T)*(F(1))^0.5)^2;
r5=1.5E19*(F(6))*(F(2));
r6=4E19*exp(-5000/T)*(F(4))*(F(6))^0.5/(1+5E-10*exp(15000/T)*(F(4)));
r7=3.5E18*exp(7300/T)*(F(2))*(F(7))/(1+2.7E-
4*exp(9750/T)*(F(7))+15*exp(1100/T)*(F(2))^0.7)^2;
r8=5.53E16*exp(-2625/T)*(F(7))/(1+6.95E-
4*exp(4215/T)*(F(7))+1.56*exp(4775/T)*(F(6)));
r9=3.5E17*exp(2900/T)*(F(7))/(1+4E-9*exp(15000/T)*(F(7)));
r10=2.5E15*exp(16000/T)*(F(9))*(F(6))/(3E-
7*exp(15000/T)*(F(9))+300*exp(6000/T)*(F(6)))^2;
r11=1.8E20*exp(5000/T)*(F(4))*(F(7))/(1+5E-10*exp(15000/T)*(F(4)));
r12=3.65E17*exp(-1595/T)*(F(9))*(F(8))^0.5/(1+0.048*exp(3037/T)*(F(9)))^2;
r14=(1.25E15*exp(5000/T)*(F(4))*(F(7))+3E20*exp(-
750/T)*(F(7))*(F(4))^0.5)/(1+1E-11*exp(20000/T)*(F(4)));
```

```
% The code below takes into account the effect of mass flux limit, it's an
% approximate approach as prescribed by the paper
r1=min(r1,0.1*0.0001*6.02214076E23*133.322*F(1)/sqrt(2*pi()*17*8.31446*0.00
1*T));
r2=min(r2,min(0.1*0.0001*6.02214076E23*133.322*F(1)/sqrt(2*pi()*17*8.31446*
0.001*T),0.1*0.0001*6.02214076E23*133.322*F(4)/sqrt(2*pi()*16*8.31446*0.001
*T)));
r3=min(r3,min(0.1*0.0001*6.02214076E23*133.322*F(1)/sqrt(2*pi()*17*8.31446*
0.001*T),4/5*0.01*0.0001*6.02214076E23*133.322*F(6)/sqrt(2*pi()*32*8.31446*
0.001*T)));
r4=min(r4,min(0.1*0.0001*6.02214076E23*133.322*F(1)/sqrt(2*pi()*17*8.31446*
0.001*T),2/3*0.1*0.0001*6.02214076E23*133.322*F(7)/sqrt(2*pi()*30*8.31446*0
.001*T)));
r5=min(r5,min(2*0.01*0.0001*6.02214076E23*133.322*F(6)/sqrt(2*pi()*32*8.314
46*0.001*T),0.1*0.0001*6.02214076E23*133.322*F(2)/sqrt(2*pi()*2*8.31446*0.0
01*T)));
r6=min(r6,min(0.1*0.0001*6.02214076E23*133.322*F(4)/sqrt(2*pi()*16*8.31446*
0.001*T),2/3*0.01*0.0001*6.02214076E23*133.322*F(6)/sqrt(2*pi()*32*8.31446*
0.001*T)));
r7=min(r7,min(0.1*0.0001*6.02214076E23*133.322*F(7)/sqrt(2*pi()*30*8.31446*
0.001*T),0.1*0.0001*6.02214076E23*133.322*F(2)/sqrt(2*pi()*2*8.31446*0.001*
T)));
r8=min(r8,0.1*0.0001*6.02214076E23*133.322*F(7)/sqrt(2*pi()*30*8.31446*0.00
1*T));
r9=min(r9,min(0.1*0.0001*6.02214076E23*133.322*F(7)/sqrt(2*pi()*30*8.31446*
0.001*T),0.1*0.0001*6.02214076E23*133.322*F(9)/sqrt(2*pi()*28*8.31446*0.001
*T)));
r10=min(r10,min(0.1*0.0001*6.02214076E23*133.322*F(9)/sqrt(2*pi()*28*8.3144
6*0.001*T),2*0.01*0.0001*6.02214076E23*133.322*F(6)/sqrt(2*pi()*32*8.31446*
0.001*T)));
r11=min(r11,min(0.1*0.0001*6.02214076E23*133.322*F(4)/sqrt(2*pi()*16*8.3144
6*0.001*T),0.1*0.0001*6.02214076E23*133.322*F(7)/sqrt(2*pi()*30*8.31446*0.0
01*T)));
r12=min(r12,min(0.1*0.0001*6.02214076E23*133.322*F(9)/sqrt(2*pi()*28*8.3144
6*0.001*T),0.1*0.0001*6.02214076E23*133.322*F(8)/sqrt(2*pi()*18*8.31446*0.0
01*T)));
r14=min(r14,min(0.1*0.0001*6.02214076E23*133.322*F(4)/sqrt(2*pi()*16*8.3144
6*0.001*T),1/3*0.1*0.0001*6.02214076E23*133.322*F(7)/sqrt(2*pi()*30*8.31446
*0.001*T)));


dF(1)=(-r1-r2-r3-r4)*2.1587E-22*62363.598221529/500*T;
dF(2)=(1.5*r1+3*r2-r5-r7+0.5*r11+r12)*2.1587E-22*62363.598221529/500*T;
dF(3)=(0.5*r1+1.25*r4+0.5*r7+0.5*r8+0.5*r9+1.5*r14)*2.1587E-
22*62363.598221529/500*T;
dF(4)=(-r2-r6-r11-r14)*2.1587E-22*62363.598221529/500*T;
dF(5)=(r2+r11)*2.1587E-22*62363.598221529/500*T;
dF(6)=(-5/4*r3-1/2*r5-3/2*r6+1/2*r8-1/2*r10)*2.1587E-
22*62363.598221529/500*T;
dF(7)=(r3-3/2*r4-r7-r8-r9-r11-3*r14)*2.1587E-22*62363.598221529/500*T;
dF(8)=(3/2*r3+3/2*r4+r5+2*r6+r7+r11-r12+r14)*2.1587E-
22*62363.598221529/500*T;
dF(9)=(r6-r9-r10-r12+r14)*2.1587E-22*62363.598221529/500*T;
dF(10)=(r9+r10+r12)*2.1587E-22*62363.598221529/500*T;
end
```