STM32 CubeMX File Window Help myST

Home > STM32F103C8Tx > ASSIGNMENT2.ioc - Pinout & Configuration

GENERATE CODE

Pinout & Configuration | Clock Configuration | Project Manager | Tools

Software Packs | Pinout

Categories | A->Z

System Core

Analog

Timers

Connectivity

Computing

Middleware and Software Packs

Pinout view | System view

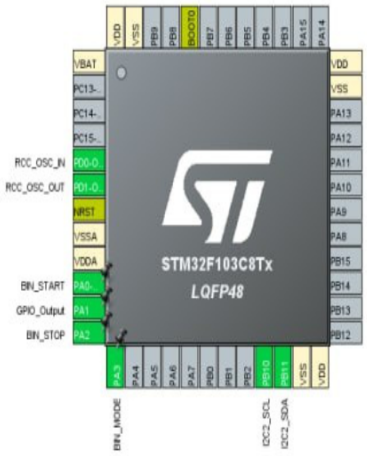

Pinout & Configuration | Clock Configuration | Project Manager | Tools

Software Packs | Pinout

Categories | A->Z

DMA
GPIO
IWDG
NVIC
✔ RCC
⚠ SYS
WWDG

Analog

Timers

RTC
TIM1
⚠ TIM2
✔ TIM3
TIM4

Connectivity

CAN
I2C1
✔ I2C2
SPI1
SPI2
USART1

Pinout view | System view

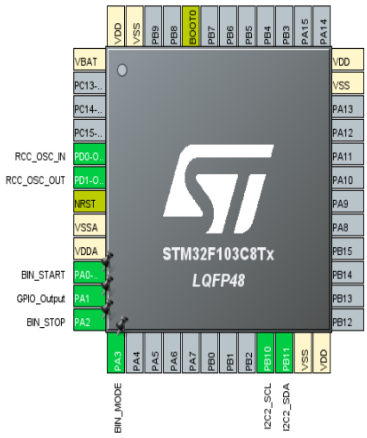

Categories | A->Z

System Core

Analog

Timers

RTC
TIM1
⚠ TIM2

Mode

Slave Mode Disable

Trigger Source Disable

☑ Internal Clock

Channel1 Disable

Channel2 Disable

Channel3 Disable

Channel4 Disable

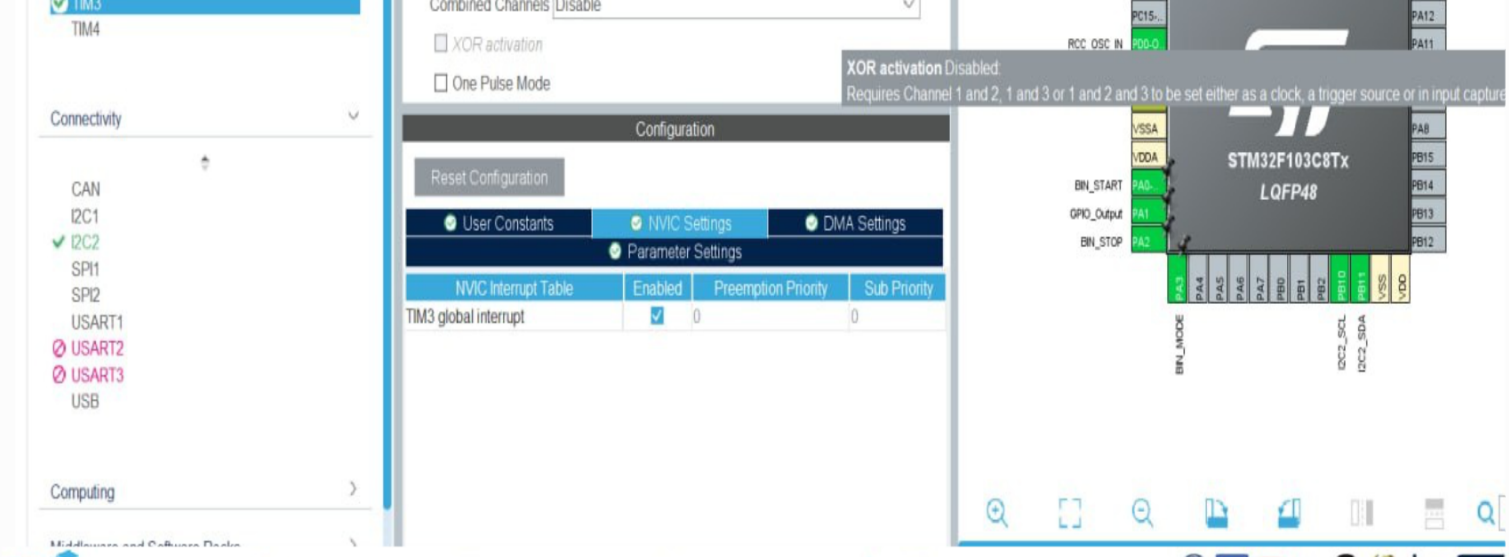
TIM3
TIM4
Connectivity
CAN
I2C1
I2C2
SPI1
SPI2
USART1
USART2
USART3
USB
Computing
Combined Channels Disable
XOR activation
One Pulse Mode
XOR activation Disabled:
Requires Channel 1 and 2, 1 and 3 or 1 and 2 and 3 to be set either as a clock, a trigger source or in input capture
Configuration
Reset Configuration
User Constants
NVIC Settings
DMA Settings
Parameter Settings
NVIC Interrupt Table
Enabled
Preemption Priority
Sub Priority
TIM3 global interrupt
0
0
STM32F103C8Tx
LQFP48
BIN_START
GPIO_Output
BIN_STOP
BIN_MODE
I2C2_SCL
I2C2_SDA

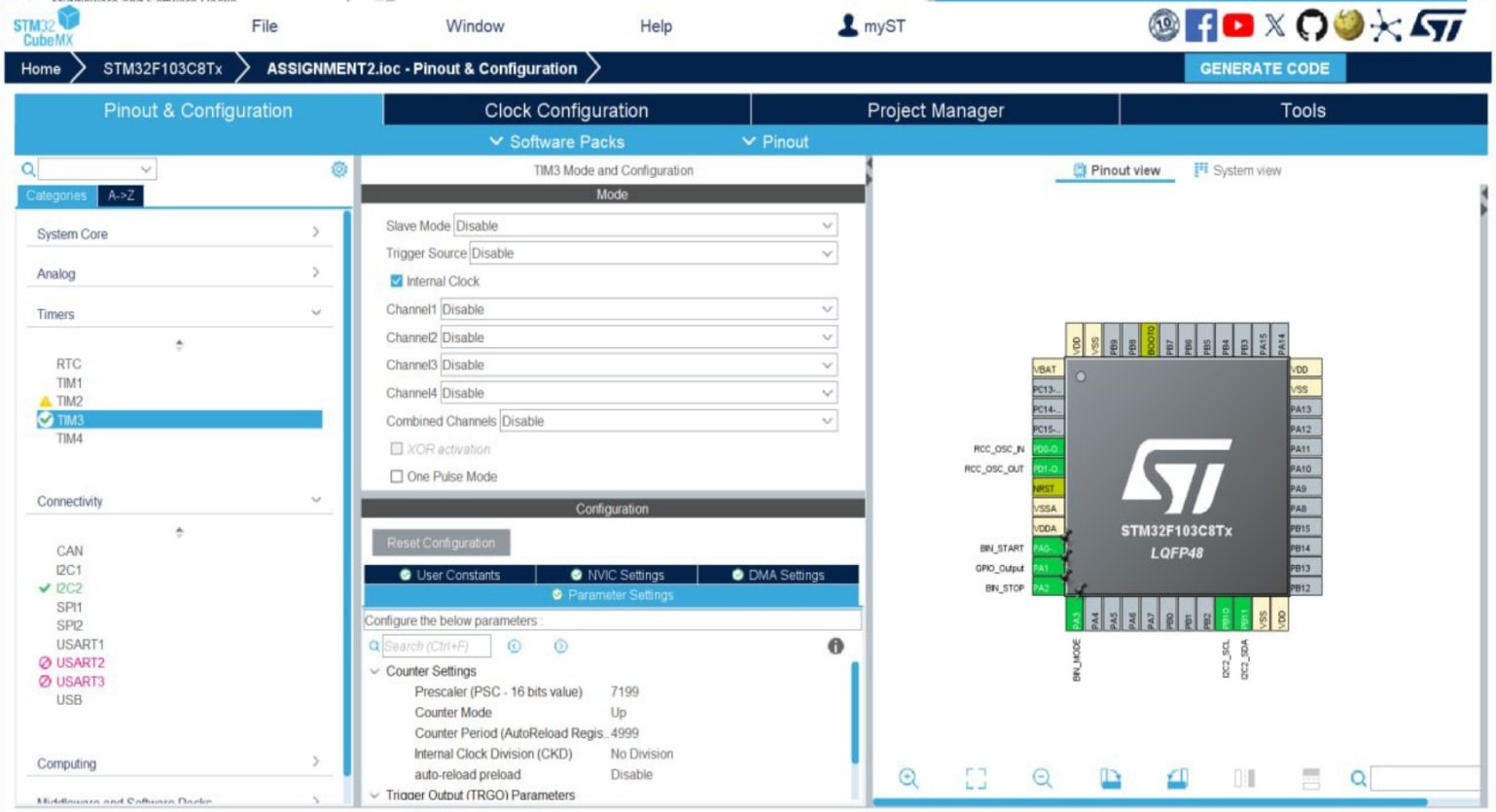
File
Window
Help
myST
Home
STM32F103C8Tx
ASSIGNMENT2.ioc - Pinout & Configuration
GENERATE CODE
Pinout & Configuration
Clock Configuration
Project Manager
Tools
Software Packs
Pinout
Categories
A->Z
System Core
Analog
Timers
RTC
TIM1
TIM2
TIM3
TIM4
Connectivity
CAN
I2C1
I2C2
SPI1
SPI2
USART1
USART2
USART3
USB
Computing
TIM3 Mode and Configuration
Mode
Slave Mode Disable
Trigger Source Disable
Internal Clock
Channel1 Disable
Channel2 Disable
Channel3 Disable
Channel4 Disable
Combined Channels Disable
XOR activation
One Pulse Mode
Configuration
Reset Configuration
User Constants
NVIC Settings
DMA Settings
Parameter Settings
Configure the below parameters :
Search (Ctrl+F)
Counter Settings
Prescaler (PSC - 16 bits value) 7199
Counter Mode Up
Counter Period (AutoReload Regis.. 4999
Internal Clock Division (CKD) No Division
auto-reload preload Disable
Trigger Output (TRGO) Parameters
Pinout view
System view
STM32F103C8Tx
LQFP48
RCC_OSC_IN
RCC_OSC_OUT
BIN_START
GPIO_Output
BIN_STOP
BIN_MODE
I2C2_SCL
I2C2_SDA

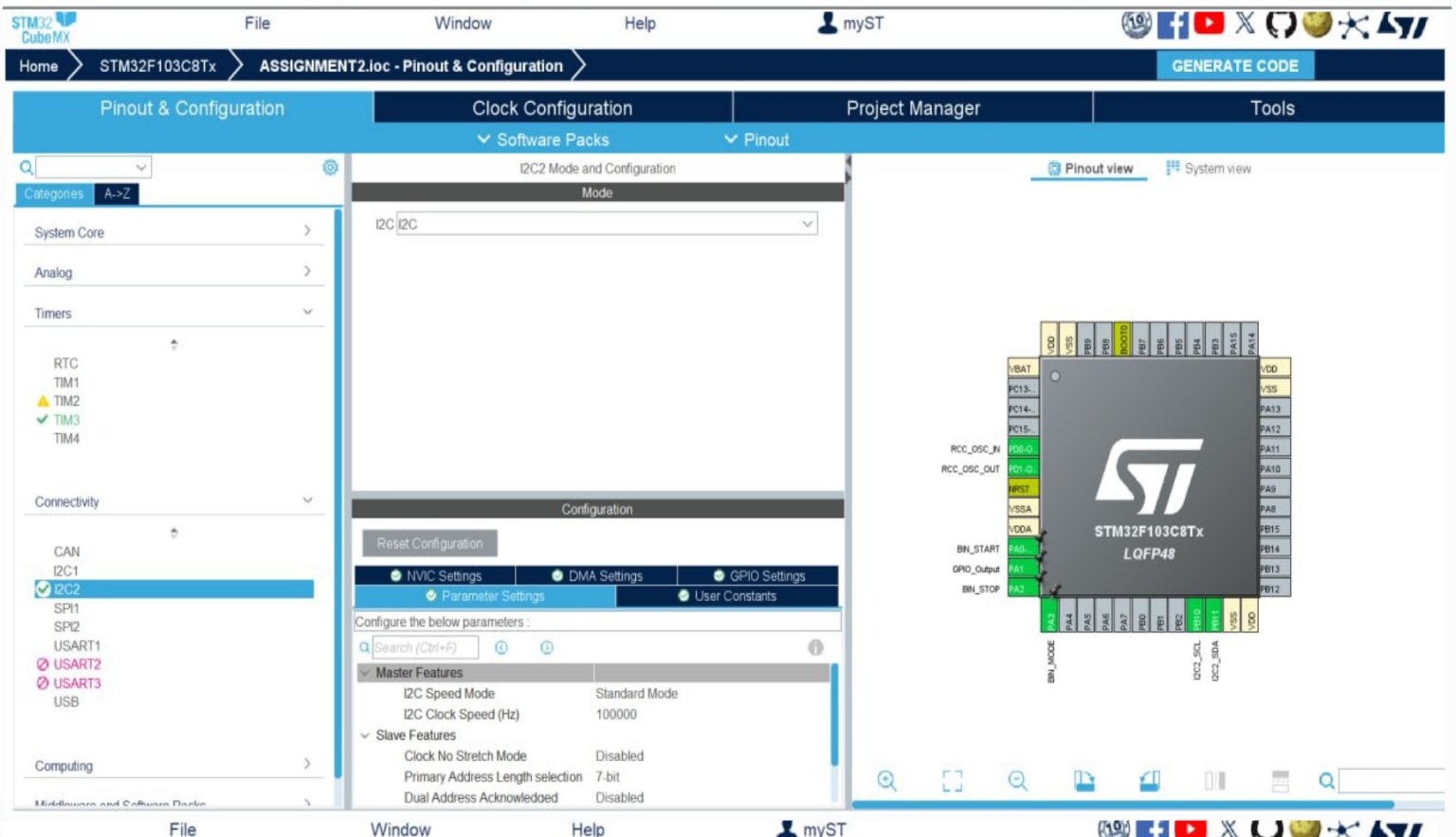
File
Window
Help
myST
Home
STM32F103C8Tx
ASSIGNMENT2.ioc - Pinout & Configuration
GENERATE CODE
Pinout & Configuration
Clock Configuration
Project Manager
Tools
Software Packs
Pinout
Categories
A->Z
System Core
Analog
Timers
RTC
TIM1
TIM2
TIM3
TIM4
Connectivity
CAN
I2C1
I2C2
SPI1
SPI2
USART1
USART2
USART3
USB
Computing
I2C2 Mode and Configuration
Mode
I2C I2C
Configuration
Reset Configuration
NVIC Settings
DMA Settings
GPIO Settings
Parameter Settings
User Constants
Configure the below parameters :
Search (Ctrl+F)
Master Features
I2C Speed Mode Standard Mode
I2C Clock Speed (Hz) 100000
Slave Features
Clock No Stretch Mode Disabled
Primary Address Length selection 7-bit
Dual Address Acknowledged Disabled
Pinout view
System view
STM32F103C8Tx
LQFP48
RCC_OSC_IN
RCC_OSC_OUT
BIN_START
GPIO_Output
BIN_STOP
BIN_MODE
I2C2_SCL
I2C2_SDA

STM32F103C8Tx > ASSIGNMENT2.ioc - Clock Configuration

GENERATE CODE

Pinout & Configuration | Clock Configuration | Project Manager | Tools
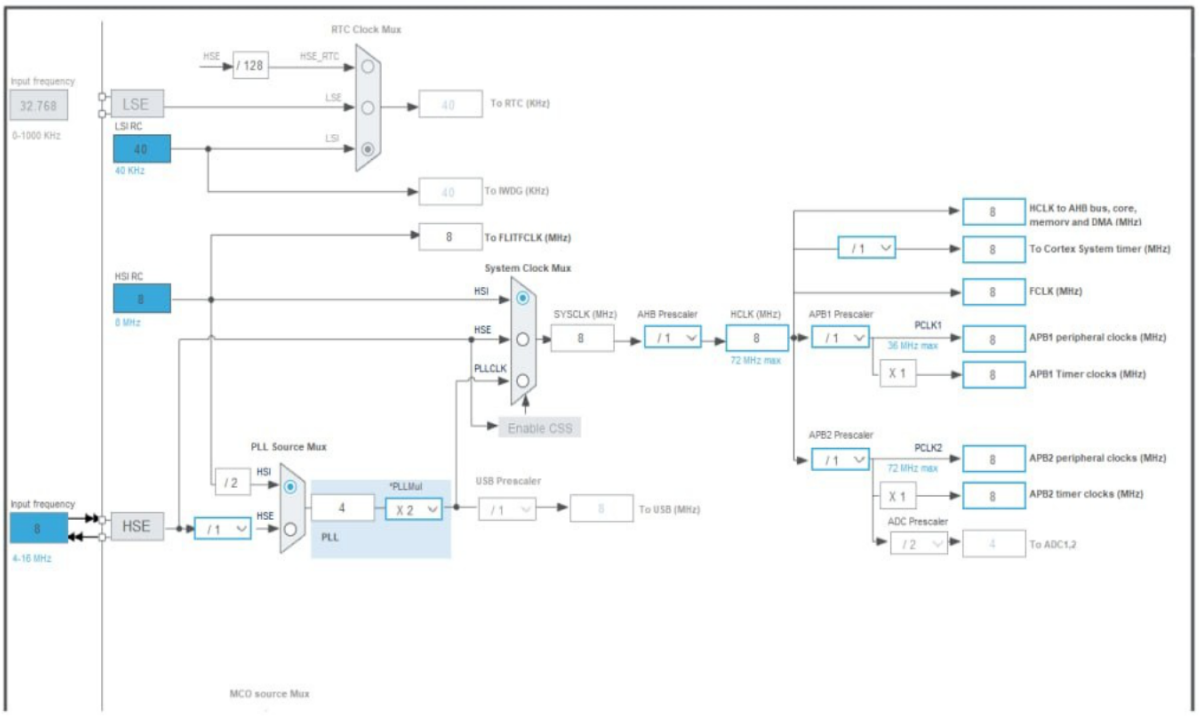
Resolve Clock Issues