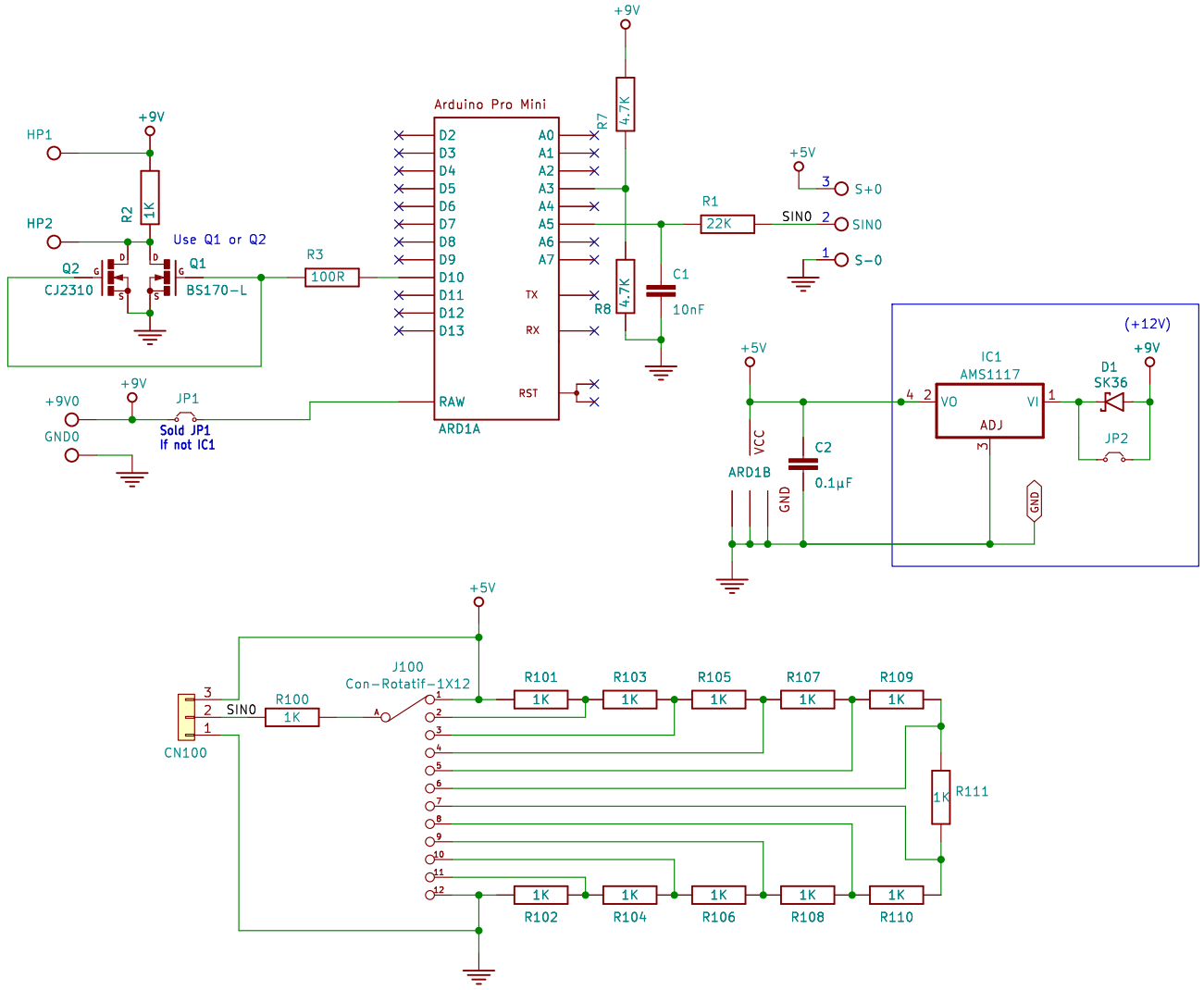


**Title: Tone Generator**

File: ToneGenerator.kicad_sch

| | | |
|---|---|---|
| Size: A4 | Date: 03/06/2024 | Rev: 3 |
| KiCad E.D.A. kicad 7.0.6 | Albert Declaye | Sheet: / |