# USB Controlled Relay

## Variant: [No Variations]

## Revision: B

RELEASED Feb-15-2025


| Page | Index | Page | Index | Page | Index |
|---|---|---|---|---|---|
| 1 | Cover Page | 6 | ..... | 11 | ..... |
| 2 | Revision History | 7 | ..... | 12 | ..... |
| 3 | Main Schematics | 8 | ..... | 13 | ..... |
| 4 | ..... | 9 | ..... | 14 | ..... |
| 5 | ..... | 10 | ..... | 15 | ..... |


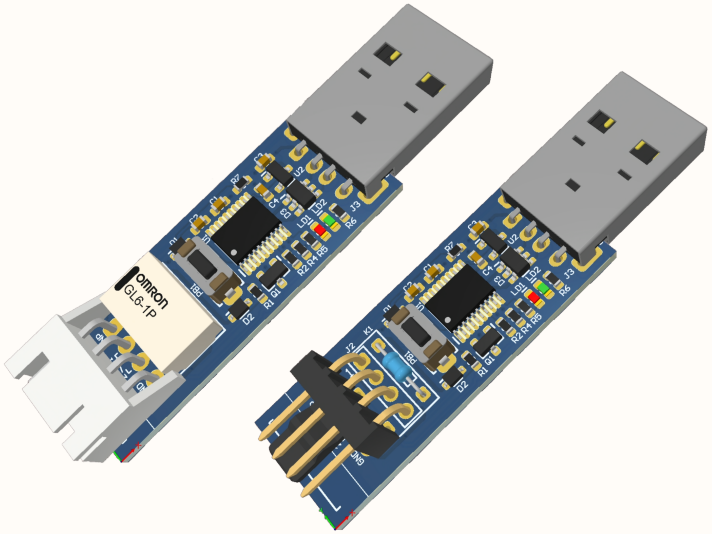


DESIGN CONSIDERATIONS

RevisionHistory

MainSchematics

DESIGN NOTE:
Example text for informational design notes.

DESIGN NOTE:
Example text for cautionary design notes.

**DESIGN NOTE:**
**Example text for critical design notes.**

**LAYOUT NOTE:**
**Example text for critical layout guidelines.**

| | | |
|---|---|---|
| Project: *USB Controlled Relay* | | Revision: *B* |
| Title: **Cover Page** | | |
| Sheet 1 of 3 | Date: Feb-15-2025 | Author: Alfredo Cortellini |


CC BY NC SA

# REVISION HISTORY

| DATE | PAGES | REVISION |
|---|---|---|
| Oct-01-2024 | N/A | Initial release A |
| Feb-07-2025 | 3 | Added ability to output UART signal through Pins 1 and 2 - Added two solder option bridges |
| Feb-07-2025 | 3 | Changed CPU type with 32KB Flash, same family. |
| Feb-07-2025 | 3 | Changed relay contact names into PIN_1 and PIN_2 to better reference the working options |
| Feb-07-2025 | 3 | Added table listing all the possible working option and relative solder bridges |
| Feb-07-2025 | 3 | Changed R2 from a 0603 SMD resistor in a 1K through hole resistor to be mounted using K1 coil holes |
| Feb-10-2025 | 3 | Flipped J3 the retention clip is at the bottom. |
| Feb-07-2025 | 3 | Re-annotate the entire schematics changed paghe format to A4 and update templates |
| Feb-10-2025 | 3 | Added solder bridge for servo option in order to have all three pins colse toghether |
| Feb-14-2025 | 3 | Changed J3 USB A connector and tacticle switch PB1 with ones cheaper |
| Feb-14-2025 | 3 | Changed resitor and capacitor value symbol to a roman letter R and F |
| Feb-15-2025 | N/A | Release B |

## Main microcontroller

A full-speed USB Impedance has:
Differential impedance (Z0) of 90 Ω ±15%,
Common mode impedance (ZCM) of 30 Ω ±30%
Maximum one-way delay of 26 ns.
Rise fall time min 4ns max 20ns.

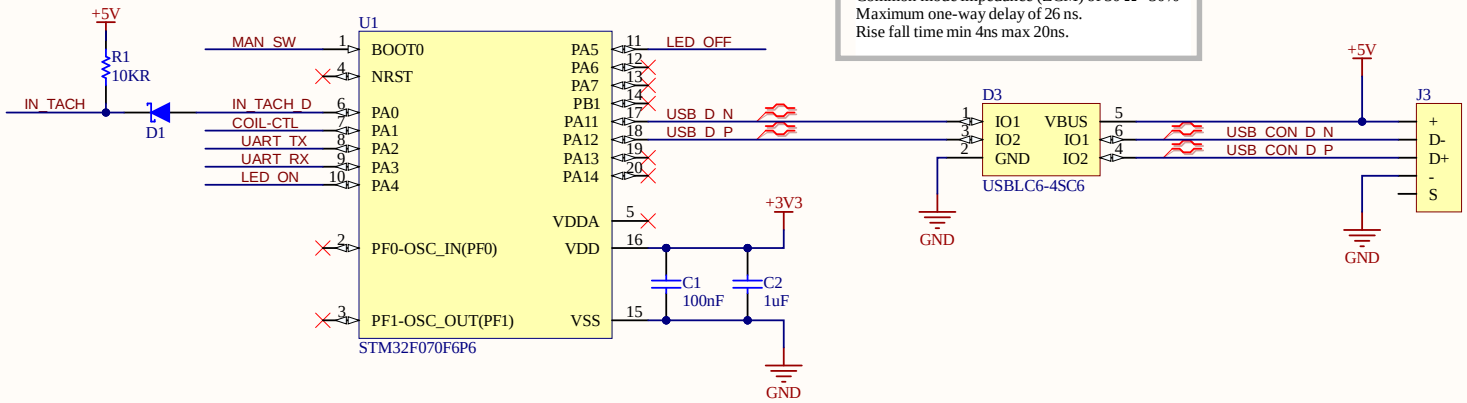


| Option 1: | Option 2: | Option 3: | Option 4: | Option 5: | Option 6: |
|---|---|---|---|---|---|
| To use clean contact relay<br>Install J1, K1 Remove J2, R3 | To power a 5V SSR short B6<br>Install J1, K1 Remove J2, R3<br>Pin 2: SSR +<br>GND: SSR - | To power 3 or 2 pin FAN short B4<br>Install J2 Remove J1, K1, R3 | To power 4 pin PWM FAN short B5<br>Install J2 Remove J1, K1<br>Install R3 on K1 coil holes | To power a servo short B5, B1<br>Install J2 Remove J1, K1, R3 | To connect UART short B2, B3<br>Install J1 Remove J2, K1, R3<br>Pin 1: TX<br>Pin 2: RX |

## Relay interface

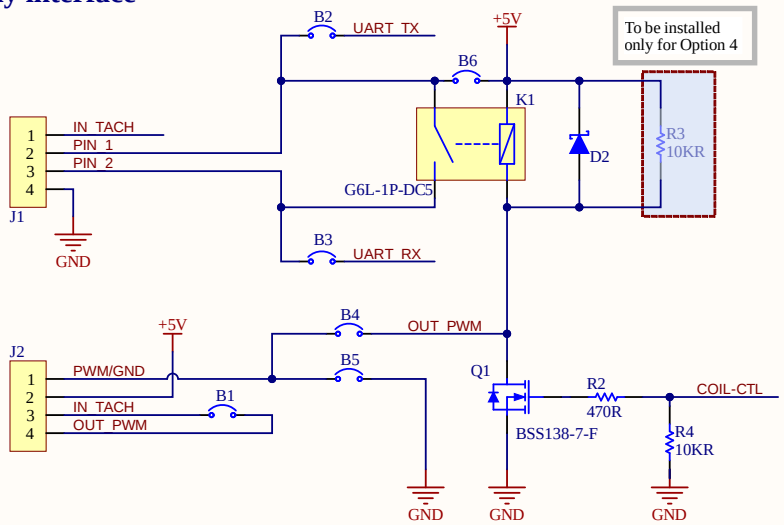


## Power Supply

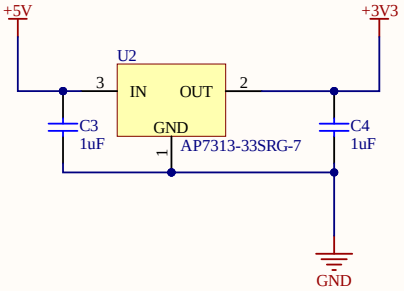


## LED Status & Switch interface

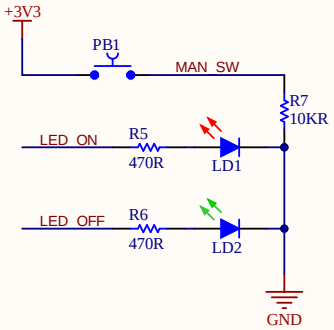


| | | | |
|---|---|---|---|
| Project: *USB Controlled Relay* | | | Revision: *B* |
| Title: **Main Schematics** | | | |
| Sheet 3 of 3 | Date: Feb-15-2025 | Author: Alfredo Cortellini | |

CC BY NC SA