USB Controlled Relay

Variant: [No Variations]

Revision: B

RELEASED Feb-15-2025

Page	Index	Page	Index	Page	Index
1	Cover Page	6	.....	11	.....
2	Revision History	7	.....	12	.....
3	Main Schematics	8	.....	13	.....
4	.....	9	.....	14	.....
5	.....	10	.....	15	.....

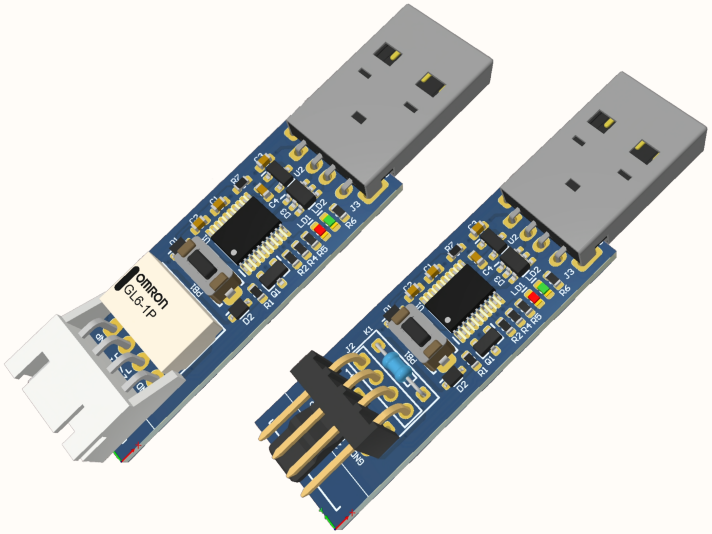

DESIGN CONSIDERATIONS

RevisionHistory

MainSchematics

DESIGN NOTE:
Example text for informational design notes.

DESIGN NOTE:
Example text for cautionary design notes.

DESIGN NOTE:
Example text for critical design notes.

LAYOUT NOTE:
Example text for critical layout guidelines.

Project: *USB Controlled Relay*		Revision: *B*
Title: **Cover Page**		
Sheet 1 of 3	Date: Feb-15-2025	Author: Alfredo Cortellini

CC BY NC SA

REVISION HISTORY

DATE	PAGES	REVISION
Oct-01-2024	N/A	Initial release A
Feb-07-2025	3	Added ability to output UART signal through Pins 1 and 2 - Added two solder option bridges
Feb-07-2025	3	Changed CPU type with 32KB Flash, same family.
Feb-07-2025	3	Changed relay contact names into PIN_1 and PIN_2 to better reference the working options
Feb-07-2025	3	Added table listing all the possible working option and relative solder bridges
Feb-07-2025	3	Changed R2 from a 0603 SMD resistor in a 1K through hole resistor to be mounted using K1 coil holes
Feb-10-2025	3	Flipped J3 the retention clip is at the bottom.
Feb-07-2025	3	Re-annotate the entire schematics changed paghe format to A4 and update templates
Feb-10-2025	3	Added solder bridge for servo option in order to have all three pins colse toghether
Feb-14-2025	3	Changed J3 USB A connector and tacticle switch PB1 with ones cheaper
Feb-14-2025	3	Changed resitor and capacitor value symbol to a roman letter R and F
Feb-15-2025	N/A	Release B

Main microcontroller

A full-speed USB Impedance has:
Differential impedance (Z0) of 90 Ω ±15%,
Common mode impedance (ZCM) of 30 Ω ±30%
Maximum one-way delay of 26 ns.
Rise fall time min 4ns max 20ns.

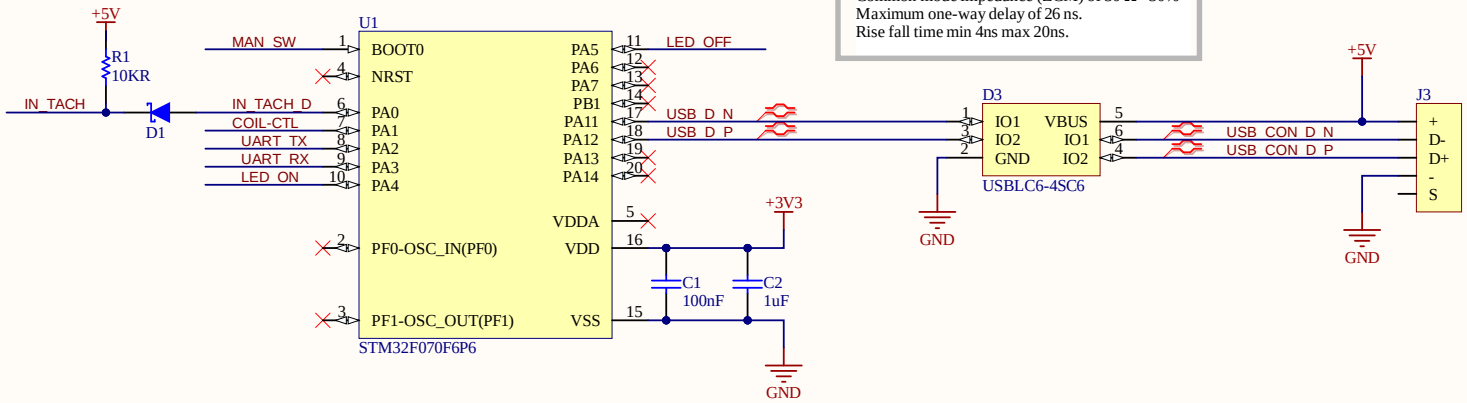

Option 1:	Option 2:	Option 3:	Option 4:	Option 5:	Option 6:
To use clean contact relay Install J1, K1 Remove J2, R3	To power a 5V SSR short B6 Install J1, K1 Remove J2, R3 Pin 2: SSR + GND: SSR -	To power 3 or 2 pin FAN short B4 Install J2 Remove J1, K1, R3	To power 4 pin PWM FAN short B5 Install J2 Remove J1, K1 Install R3 on K1 coil holes	To power a servo short B5, B1 Install J2 Remove J1, K1, R3	To connect UART short B2, B3 Install J1 Remove J2, K1, R3 Pin 1: TX Pin 2: RX

Relay interface

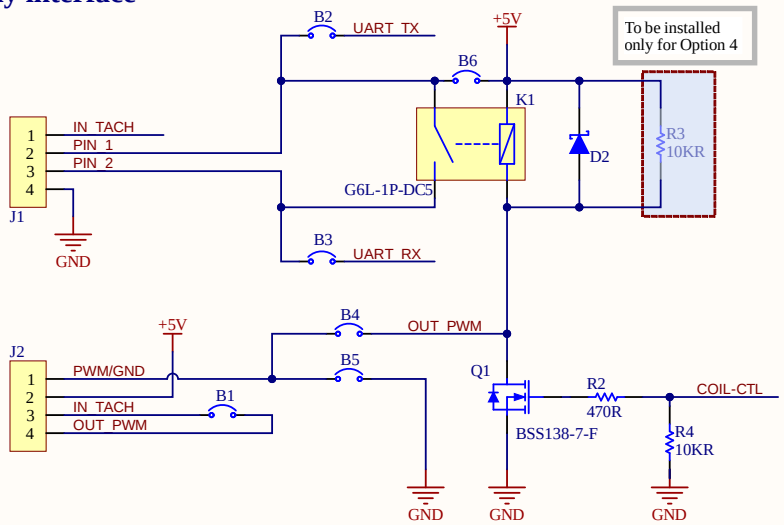

Power Supply

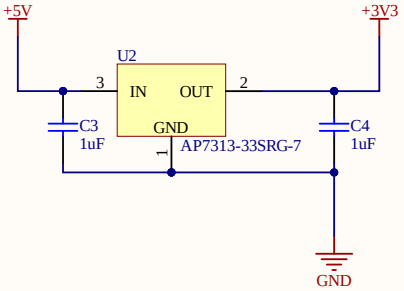

LED Status & Switch interface

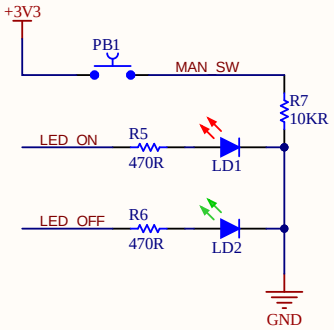

Project: *USB Controlled Relay*			Revision: *B*
Title: **Main Schematics**			
Sheet 3 of 3	Date: Feb-15-2025	Author: Alfredo Cortellini	

CC BY NC SA