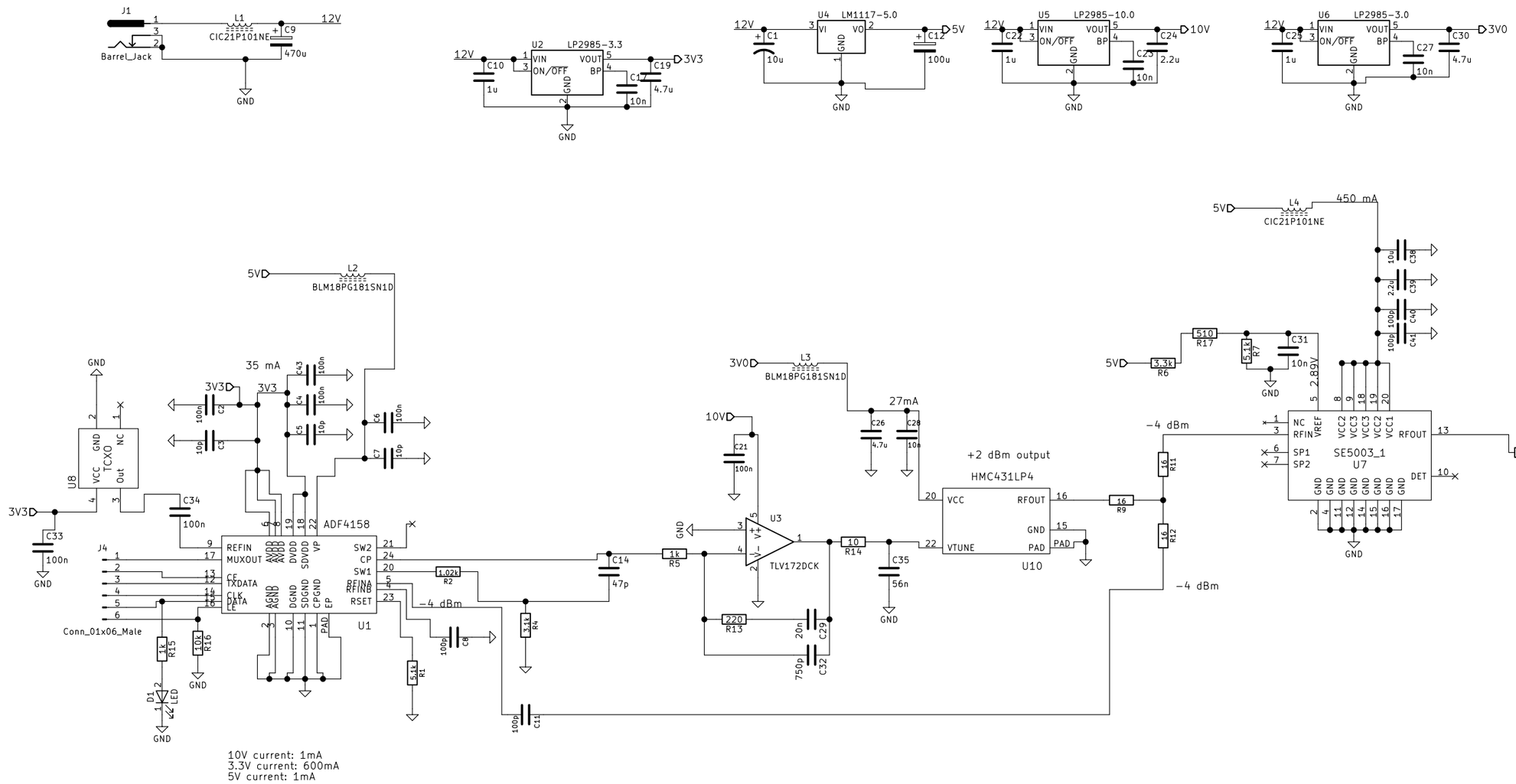

10V current: 1mA
3.3V current: 600mA
5V current: 1mA

Rahul Cherukuri
rahul29@bu.edu
Boston University

Sheet: /
File: tx.sch

Title: Tx

Size: A3	Date: 08/16/2018	**Rev:**
KiCad E.D.A. eeschema 4.0.7		Id: 1/1