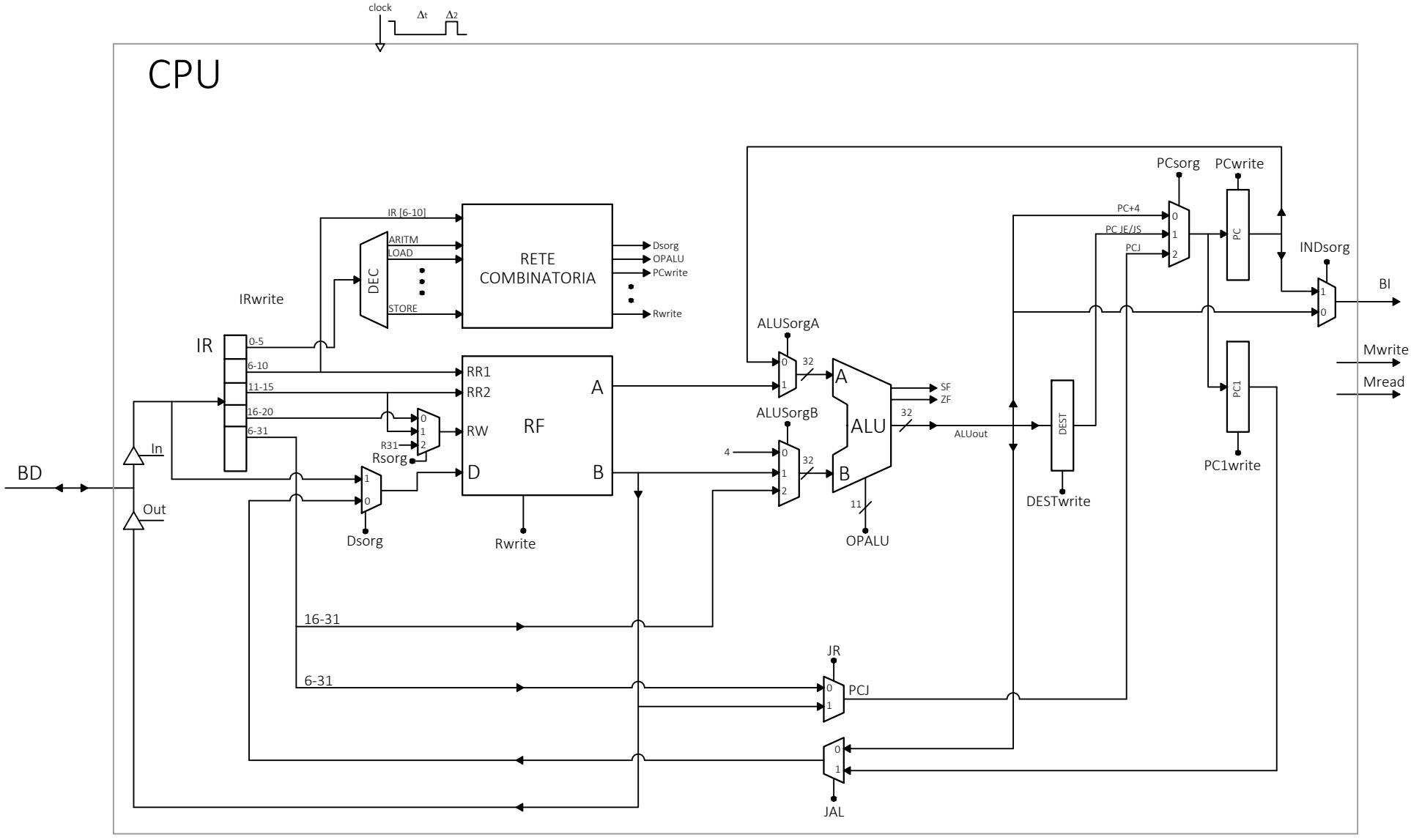
clock
Δt
Δ2
CPU
IR [6-10]
ARITM
LOAD
STORE
DEC
RETE
COMBINATORIA
Dsorg
OPALU
PCwrite
Rwrite
IRwrite
IR
0-5
6-10
11-15
16-20
6-31
RR1
RR2
RW
D
RF
A
B
R31
Rsorg
Dsorg
Rwrite
ALUSorgA
ALUSorgB
4
32
ALU
SF
ZF
ALUout
OPALU
11
PCsorg
PCwrite
PC+4
PC JE/JS
PCJ
PC
INDsorg
BI
Mwrite
Mread
PC1
PC1write
DEST
DESTwrite
BD
In
Out
16-31
6-31
JR
PCJ
JAL