Team 4: Derek Krantz, Adrian Lechuga Diaz, Maksim Dziatlovich
3/15/2023
ME 340-2

Final Report

Project Overview

Our team's project was a two-piece injection molded part of a tree with a basketball hoop attached to it. To make this part, we first made dimensioned sketches of our chosen design, then made CAD models of those sketches. From the models, we machined a metal mold that was created using the CNC machine. Finally, we used the molds to injection mold our parts, each of which we made 23 of. This process helped familiarize our team with the injection molding process and repeatable manufacturing.

Shown below are our team's initial sketches during the brainstorming phase, as well as the initial tree/rim sketch with rough dimensions. As can be seen in Figure 1, this initial ideation phase began with a wide scope of ideas, demonstrated in the form of quick sketches.

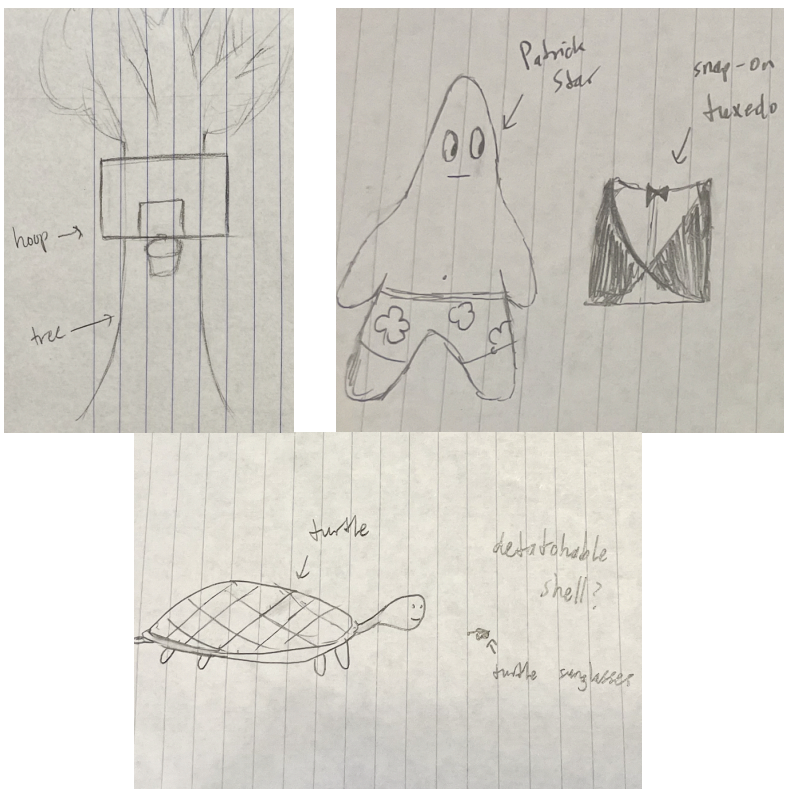

Figure 1: Three design options during the initial brainstorming phase: the basketball hoop-tree, Patrick Star with a snap-on tuxedo, and a turtle with sunglasses

Further brainstorming led to the point where a single design was chosen and specific features were laid out, as well as rough dimensions (shown in Figures 2-4).

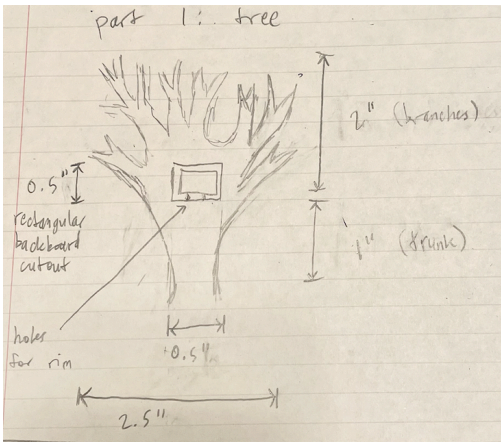

Figure 2: Tree sketch with rough dimensions

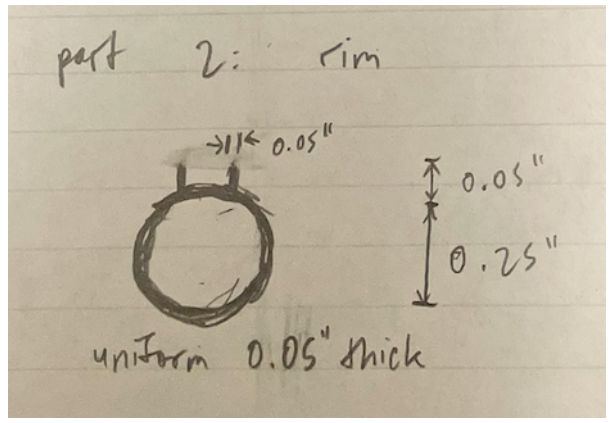

Figure 3: Rim sketch with rough dimensions

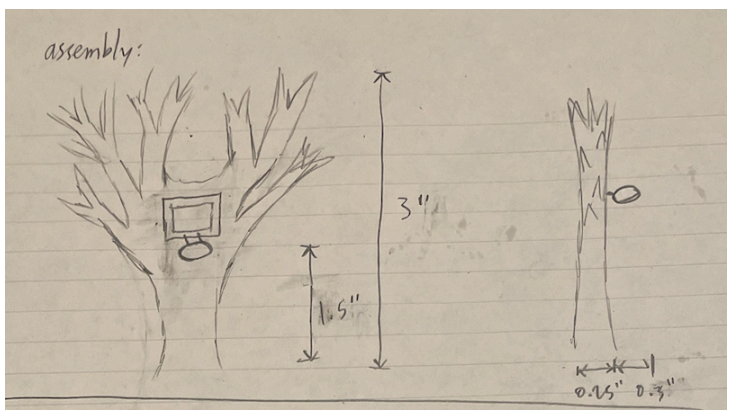

Figure 4: Full assembly sketch with rough dimensions

From these sketches, the group went into NX to model each component. In these models, we emphasized having uniform thickness wherever possible, removability from a mold, and the part being machinable with the available tools, among other considerations when injection molding.

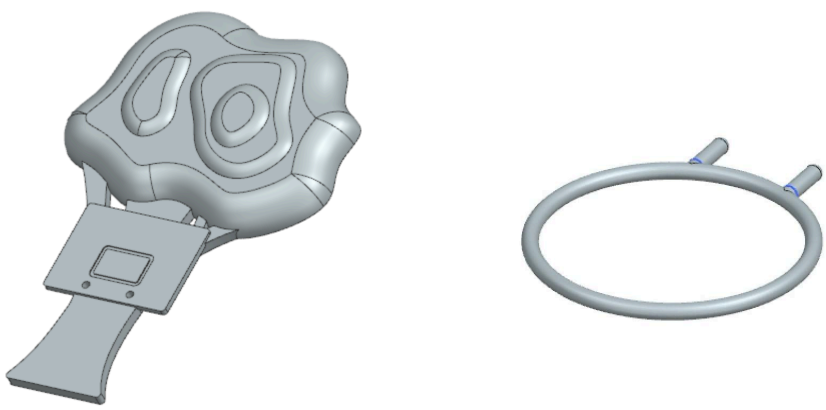

Figure 5: Final CAD images of the product to be designed

Part Design

When focusing on the part design of an injection molded component, one must take into account a variety of factors and features. One of the most important features to ensure is uniform wall thickness. The top of the tree part is shelled to 0.0933”, the same thickness as the trunk feature is extruded to. The part gets slightly thicker at the backboard feature, but still within the recommended uniform wall thickness range of 0.030”-0.125” for polypropylene to minimize net shrinkage. This was done because we wanted the backboard to stand out slightly from the trunk. The portion of the backboard outside the bounds of the trunk is also 0.0933” thick.

We avoided sharp corners anywhere within the leaf area at the top of the part. Where we needed curves, the inside radius was half the wall thickness and the outside radius was 1.5 times larger than the wall thickness. The edge blends eliminate the need for draft in this area and reduce deformation due to high stress through the injection molding and cooling process.

We chose a pin-hole assembly of our two features, so we had to consider both our hole placement and interference fit between the pins and holes. In order to reduce stress between wall sections, our holes were placed “5.4D” away from each other and “.83D” away from wall edges. Although “.83D” is not greater than the “1D” minimum, we tolerated this because those wall sections were not complete walls, they are only locations where the uniform part thickness drops slightly. The calculation of our hole size adjustment for the interference fit is below:

E_h = 1200 MPa v_h = 0.45 E_S = 1200 Mpa v_s = 0.45 S_d = 34 MPa

D = 0.166” d = 0.0625”

$$W = \frac{1+(d/D)^2}{1-(d/D)^2} = 1.33$$

$$I = \left(\frac{S_d \cdot d}{W}\right) \cdot \left(\left(\frac{W+v_h}{E_h}\right) + \left(\frac{1-v_s}{E_s}\right)\right) = 3.102 \cdot 10^{-3}$$

$$d_1 = d - I$$

$$\mathbf{d_1 = 0.0594\ in}$$

Due to expected shrinkage, we decided to increase the hole size by 1%, which led to the final pin size of .0625in (1/16th tool) and a hole size of .0600in.

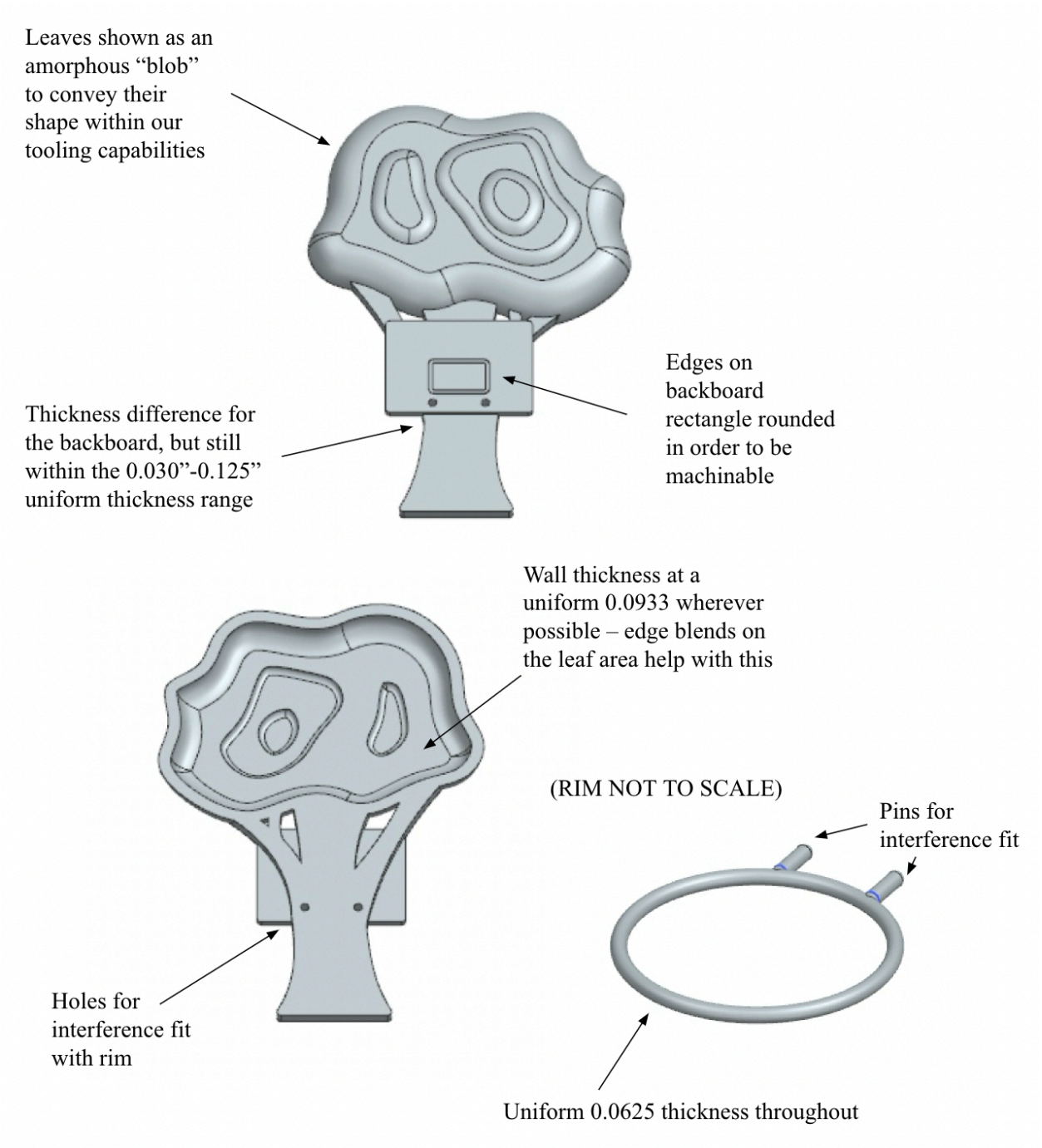

Figure 6: CAD drawings of tree and rim with design features

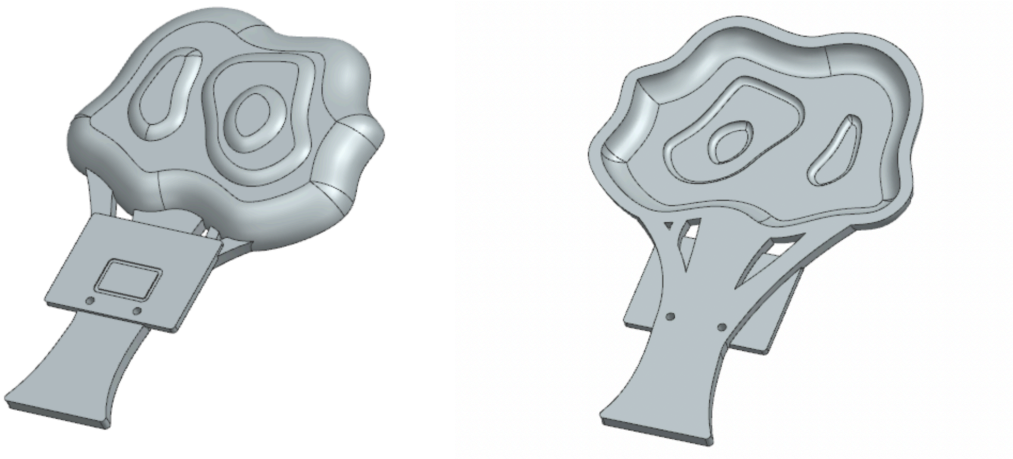

Figure 7: Tree Part CAD from front and rear from an alternate angle.

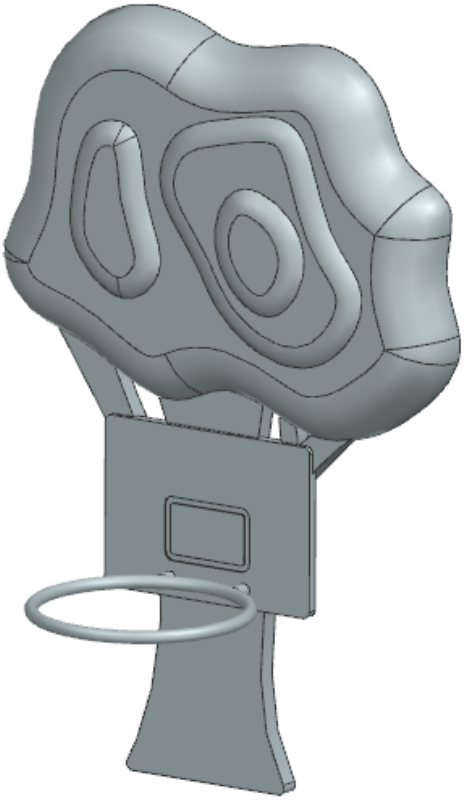

Figure 8: Final CAD Assembly

Mold Design Process

We quickly determined that our parting line would be along the edge of the underside (or back) of the tree (shown in Figures 9a and 9b), and for the rim, it would be along the center of the entire rim (since both molds are essentially cavities, shown in Figures 9c and 9d). The orientation of the tree is laid flat across the entire mold, so that the parting line goes along the largest cross-sectional area, prevents complex mold features, and leads to the simplest direction of pull when removing a part from the molds after being injection molded. This led to a relatively simple process for creating the CAD molds, as the tree part is just last flat on the core and extruded upwards, and the opposite is done for the cavity.

The rim orientation is also flat alongside the mold, so that once again, the largest cross-sectional area is parallel with the mold face. As for shrink compensation, the only place it would be an issue would be regarding the interference fits. As noted above, we increased our calculated hole size by 1% to compensate for the expected shrink. We did not also increase the pin size because the fit is already interfering, so a slight decrease in pin thickness would not be an issue as long as it did not shrink more than a highly unlikely 4%.

Another manufacturability consideration was the fact that we designed side shutoffs for the tree molds. This was needed so that no material would go between the tree trunk and the backboard in areas we did not want it to. We didn't introduce draft into this side shutoff because the thickness of the area in contact with the opposite mold was small enough for us to believe that assembly and disassembly would not be a problem.

We decided to lay the tree part out as shown in Figures 9a and 9b, the only layout that would allow the tree to fit. This was also convenient when it came to runner design, because it allowed us to create 3 entryways (two runners with gates and a single gate directly into the part). We wanted multiple points of entry into the part so it could fill more evenly and quickly before the plastic cooled, especially for a part of this large size. The downside to having so many entryways is an increase to the number of weld lines. To counteract this, we would ensure a high enough mold temperature, melt temperature, and injection pressure. We also tried to gate close to a wall where we could so that jetting wouldn't occur; this was most feasible for the bottom gate near the tree trunk. For the potential sink marks, we tried to keep most of the part thicknesses within 10% of each other and added a little rectangular feature to the backboard to help with making it less noticeable.

For the rim molds (Figures 9c and 9d), we placed the two pins about .030" away from the nozzle on either side, as close as we could get. This eliminated the need for runners, as we could gate directly into the part. This left the possibility of a weld line at the opposite end of the ring. Again, we would increase the mold temperature, melt temperature, and injection pressure if this was an issue when molding.

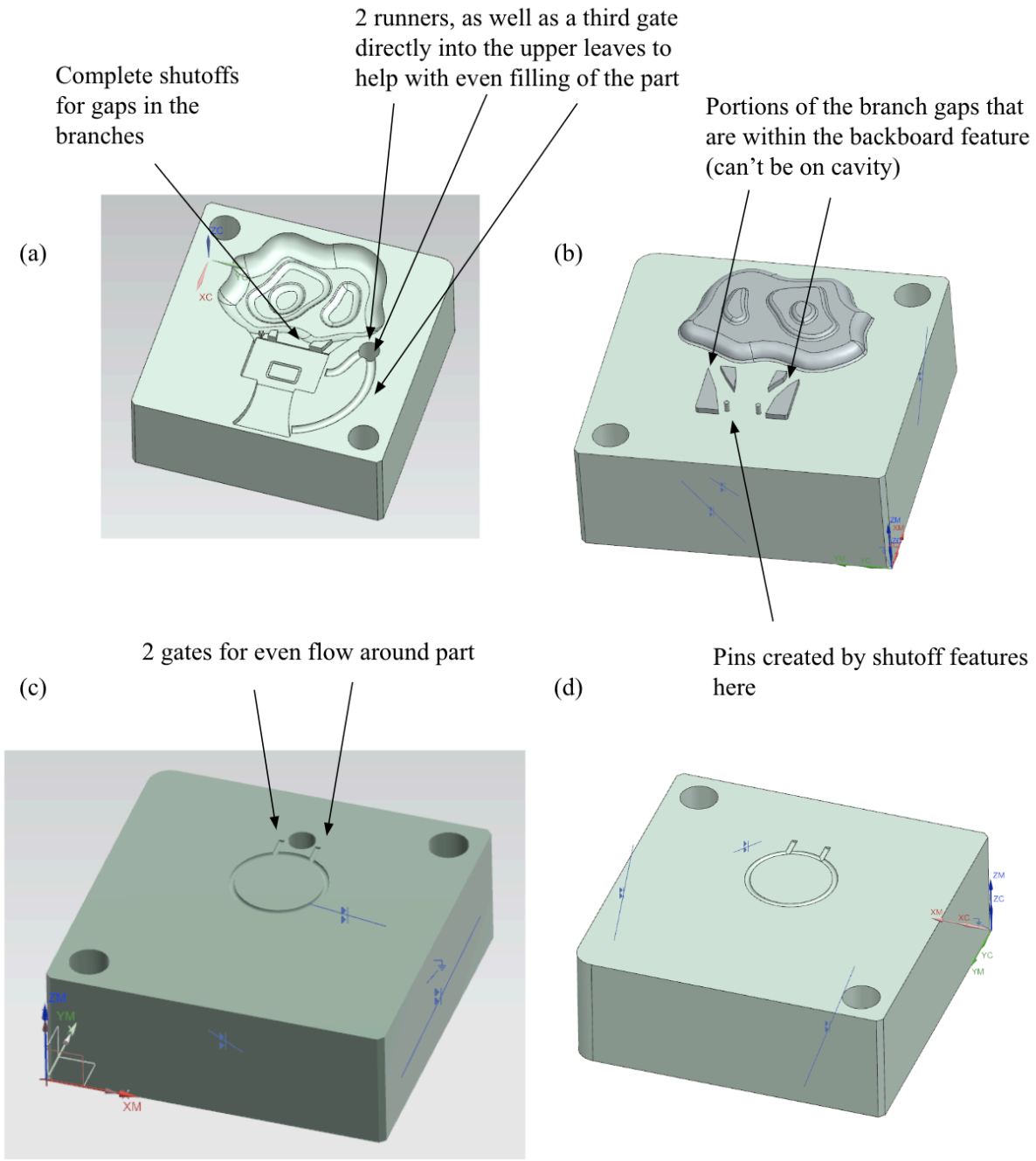

Figure 9: Mold CAD model; (a) tree cavity mold, (b) tree core mold, (c) rim cavity mold, and (d) rim core mold.

Mold Manufacturing Process

Tree Core:

Table 1: Tree Core CAM Processes/Operations

Operation	Method	Tool	Time	Explanation
CAVITY_MILL	MILL_ROUGH	EM 3/4”	00:40:46	Cavity mill to remove most of the material from the mold
CAVITY_MILL	MILL_FINISH	EM 3/4”	00:06:31	Finishing cut for the previous operation
CAVITY_MILL	MILL_ROUGH	EM 1/8”	00:07:06	Cavity mill to remove the leftover material from the cut with 3/4” tool
CAVITY_MILL	MILL_FINISH	EM 1/8”	00:13:06	Finishing cut for the previous operation
CAVITY_MILL	MILL_ROUGH	BM 1/16”	00:09:59	Machining the curves with ball end mill
CAVITY_MILL	MILL_FINISH	BM 1/16”	00:32:06	Finishing cut for the previous operation
AREA_MILL	MILL_FINISH	BM 1/16”	02:04:12	Finishing the surface of the core to bring the surface variation down

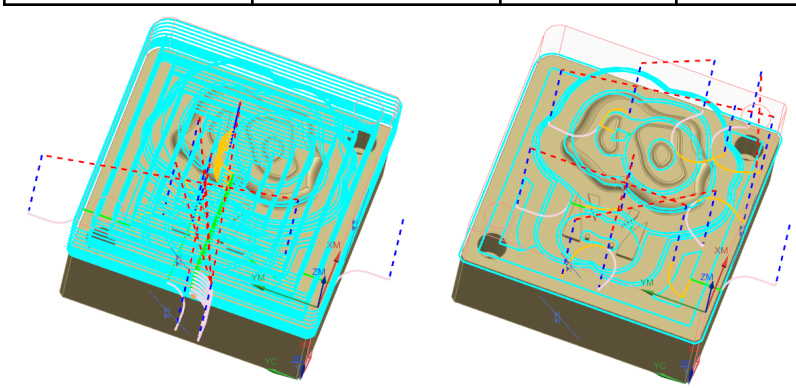

(a) (b)

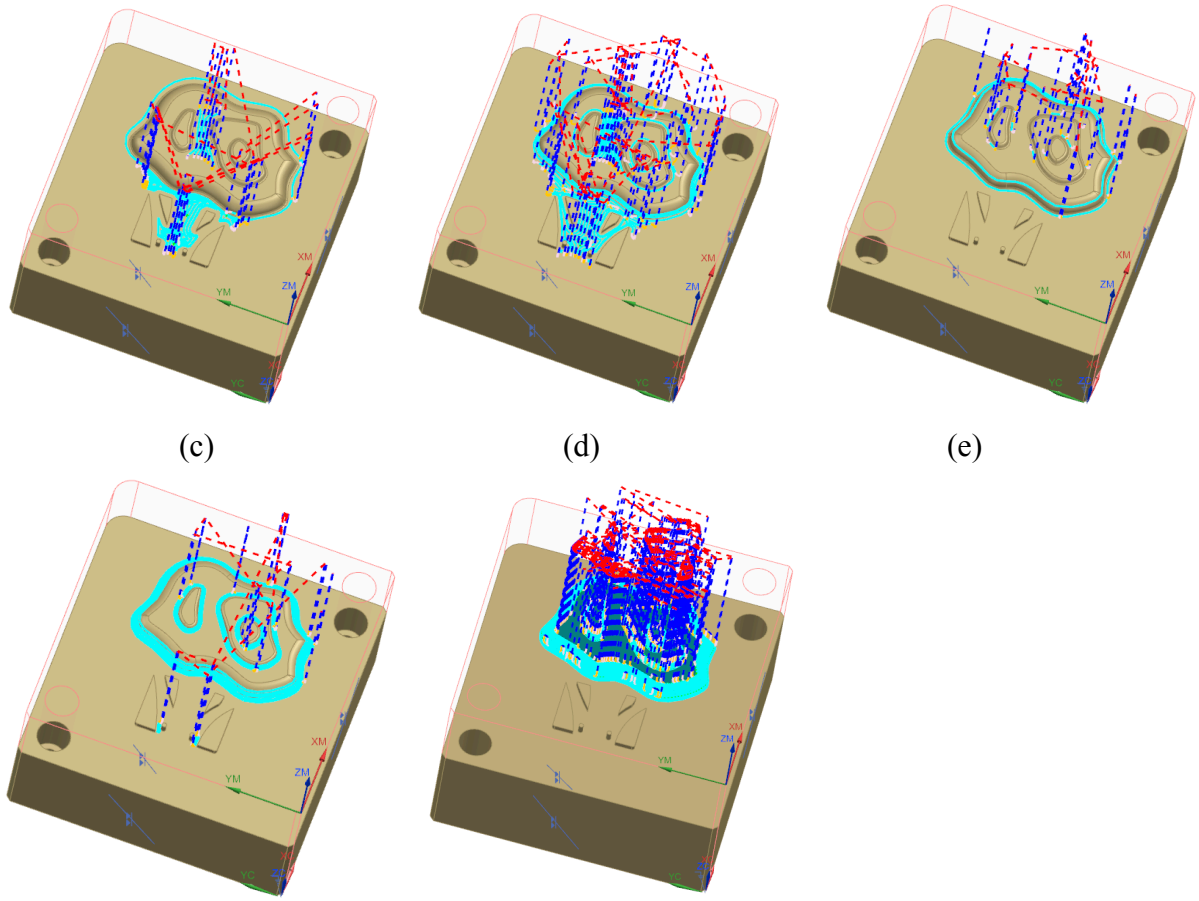

Figure 10. Tree core toolpaths. From (a) to (g), in order of appearance in Table 1.

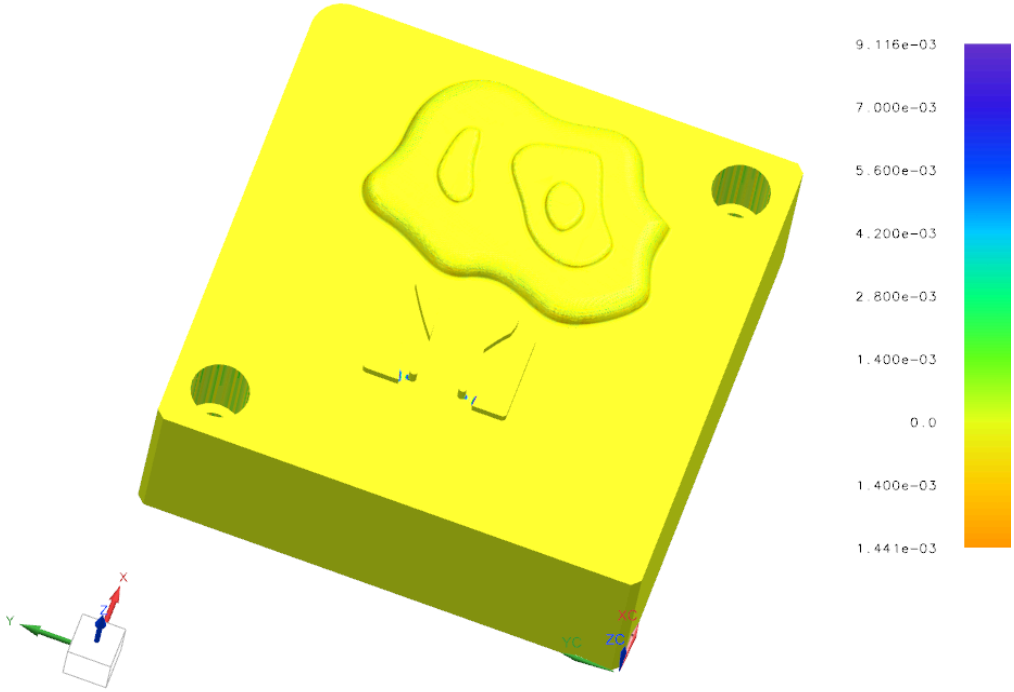

Figure 11. 3D analysis of the toolpaths for the tree core.

Total cutting time for this mold was 03:54:23. Most of the time is spent removing the excess material from the mold, and finishing the surface of the core with a 1/16 in ball end mill. From 3D analysis in Figure 11, no obvious surface variation was observed outside of the slight amount of material left around the pins at the bottom. However, this isn't a problem with the interference fit since it is the backside of the part. We had an initial problem with one of the tools not being zeroed correctly, which led to one of the operations cutting too deeply and having to restart with a new mold. Outside of this error, there were no other problems with the CAM for this mold.

Tree Cavity:

Table 2: Tree Cavity CAM Processes/Operations

Operation	Method	Tool	Time	Explanation
CAVITY_MILL	MILL_ROUGH	EM 1/2"	00:05:04	Removing most of the material from the "leaves" cavity
CAVITY_MILL	MILL_FINISH	EM 1/8"	00:07:04	Finishing cut for the previous operation
CAVITY_MILL	MILL_ROUGH	EM 1/8"	00:10:43	Removing most of the material from the board area
CAVITY_MILL	MILL_FINISH	EM 1/8"	00:15:05	Finishing cut for the previous operation
AREA_MILL	MILL_FINISH	BM 1/8"	00:21:18	Machining the curves on the tree cavity
AREA_MILL	MILL_FINISH	BM 1/16"	02:23:15	Finishing the curves on the tree cavity
CAVITY_MILL	MILL_ROUGH	BM 1/8"	00:01:01	Machining the runners

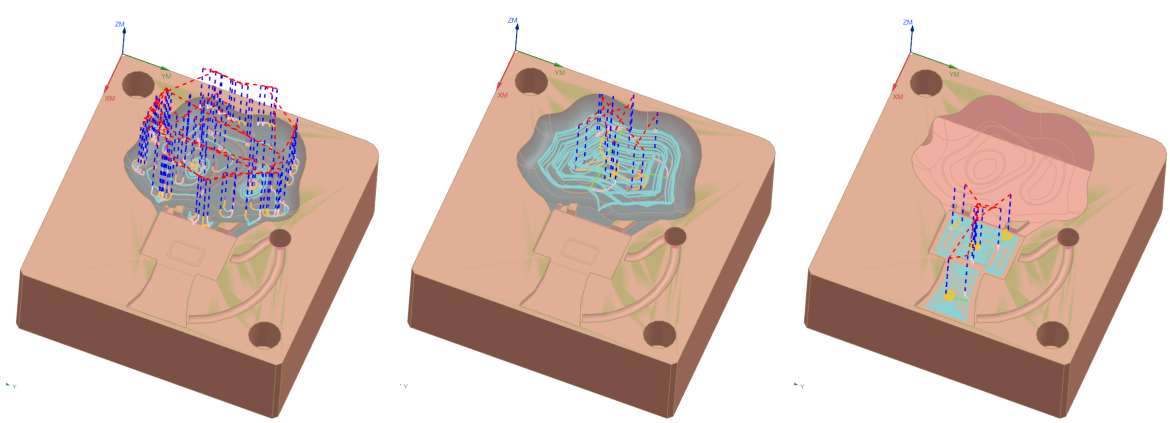

(a) (b) (c)

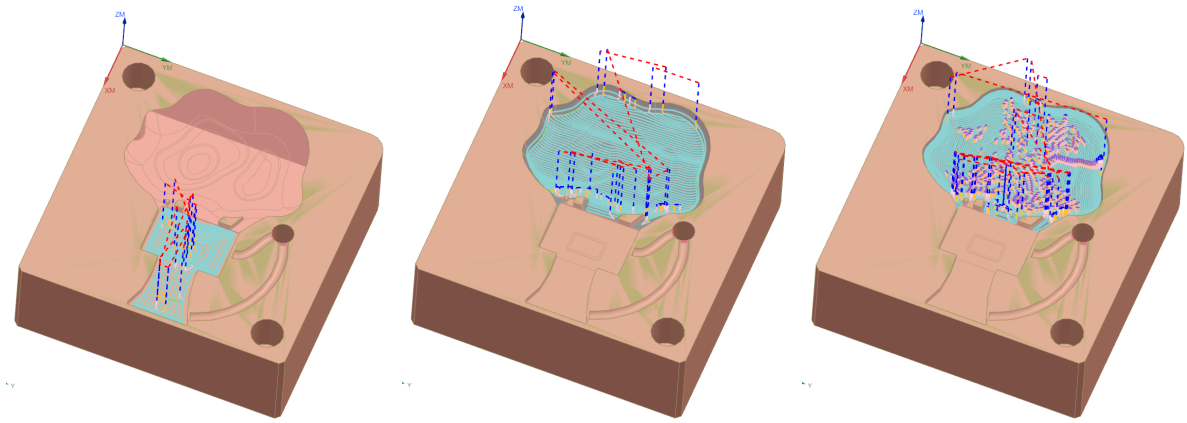

(d) (e) (f)

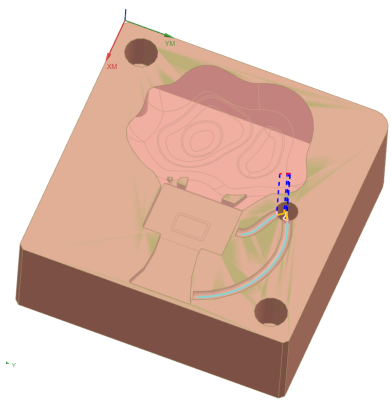

(g)

Figure 12. Tree cavity toolpaths. From (a) to (g), in order of appearance in Table 2.

Overall, we managed to optimize the cutting time for this mold by starting with a big tool size, and removing as much material as possible in the shortest time possible, and then using smaller tools to finish the cutting. Runners did not have a finishing operation as it was unnecessary. Total cutting time was 03:24:29, and is a big step down from over 6 hours we were getting originally due to unoptimized cutting strategy.

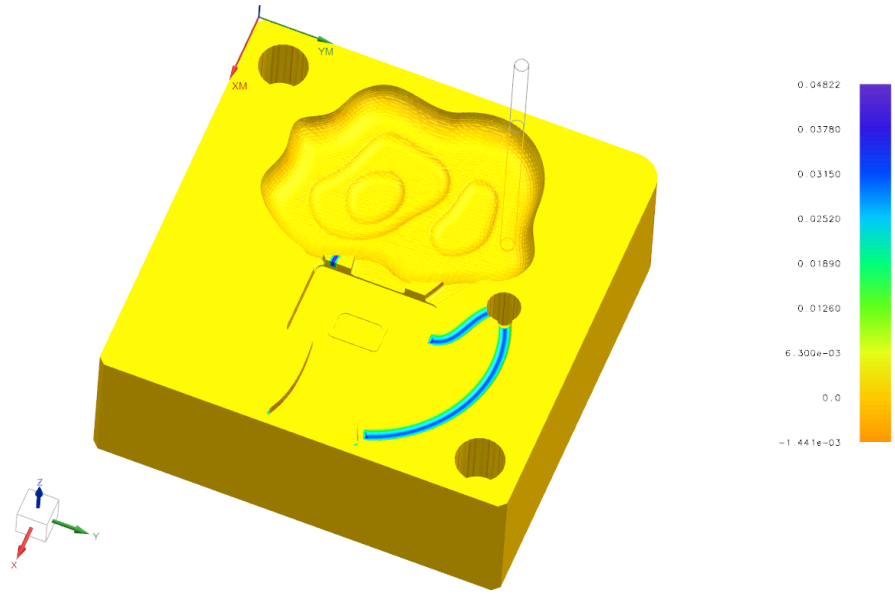

Figure 13. 3D analysis of the toolpaths for the tree cavity.

Apart from small discrepancies between the modeled and real depth of the runners, the part as a whole did not have any significant surface variation. A single modification we introduced while creating the toolpaths was to not cut away one portion of the mold (visible as a small portion with high surface variation in Figure 13), which was supposed to be the branch, due to needing very small tool size, and in general it was not a practical feature to machine and we removed it.

Rim Core:

Table 3: Rim Core CAM Processes/Operations

Operation	Method	Tool	Time	Explanation
CAVITY_MILL	MILL_ROUGH	EM 1/2”	00:29:39	Cavity mill to remove most of the material from the mold
CAVITY_MILL	MILL_FINISH	EM 1/2”	00:04:13	Finishing cut for the previous operation
PLANAR_MILL	MILL_ROUGH	BM 1/16”	00:11:15	Planar mill to cut the 2D shape of the rim
PLANAR_MILL	MILL_FINISH	BM 1/16”	00:06:40	Finishing cut for the previous operation

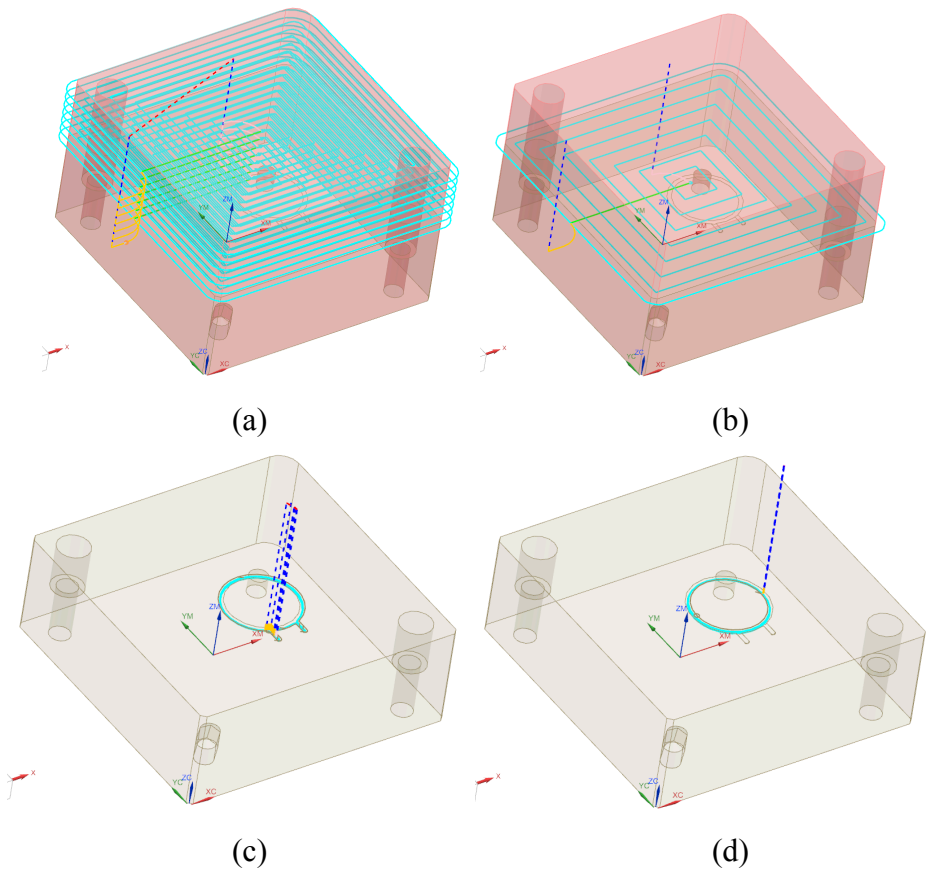

Figure 14: Rim core toolpaths. From (a) to (d), in order of appearance in Table 3.

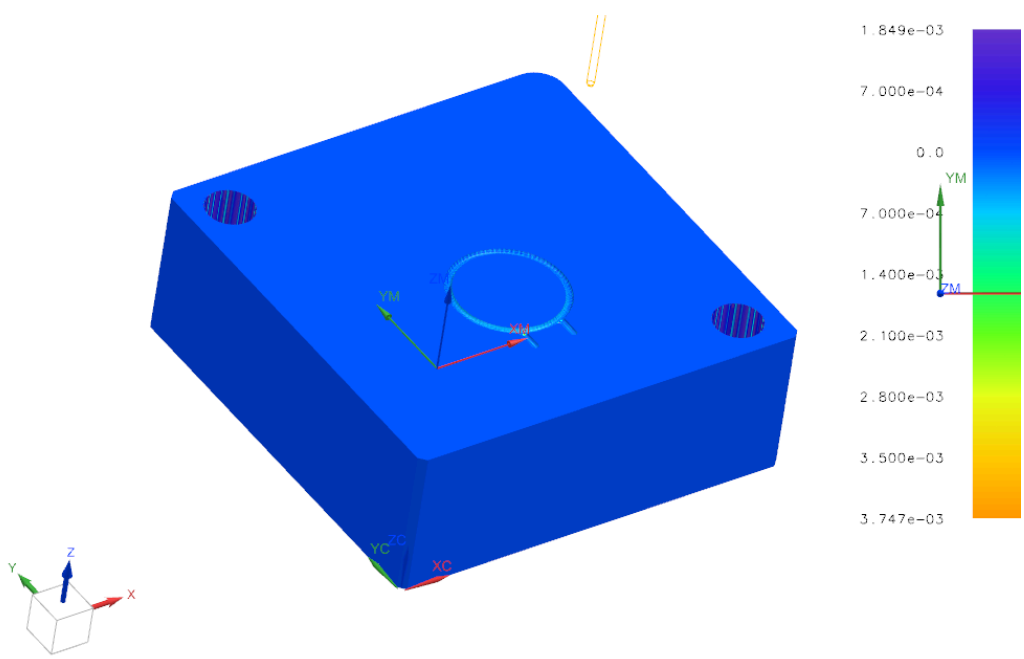

Figure 15. 3D analysis of the toolpaths for the rim core.

Total cutting time for this part was 00:51:47. There were no significant difficulties with the toolpaths for the rim core. This was a fairly straightforward CAM design, which also produced very good surface variation results as seen in Figure 15.

Rim Cavity:

Table 4: Rim Cavity CAM Processes/Operations

Operation	Method	Tool	Time	Explanation
PLANAR_MILL	MILL_ROUGH	BM 1/16”	00:11:14	Planar mill to cut the 2D shape of the rim
PLANAR_MILL	MILL_FINISH	BM 1/16”	00:06:39	Finishing cut for the previous operation

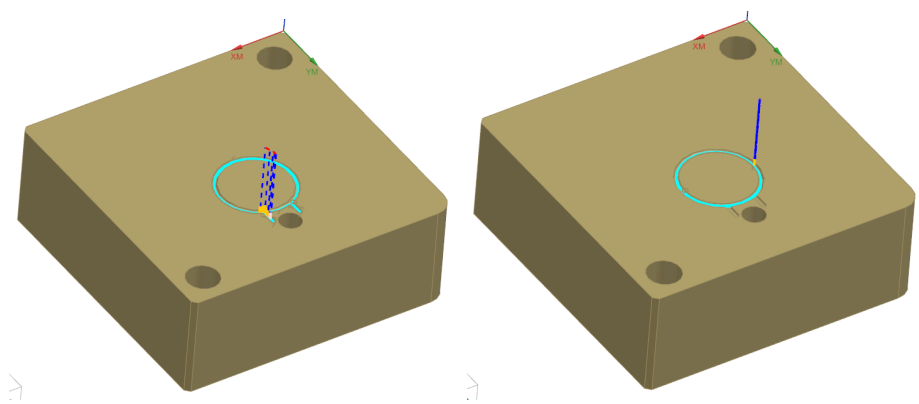

(a) (b)

Figure 16. Rim cavity toolpaths. From (a) to (b), in order of appearance in Table 3.

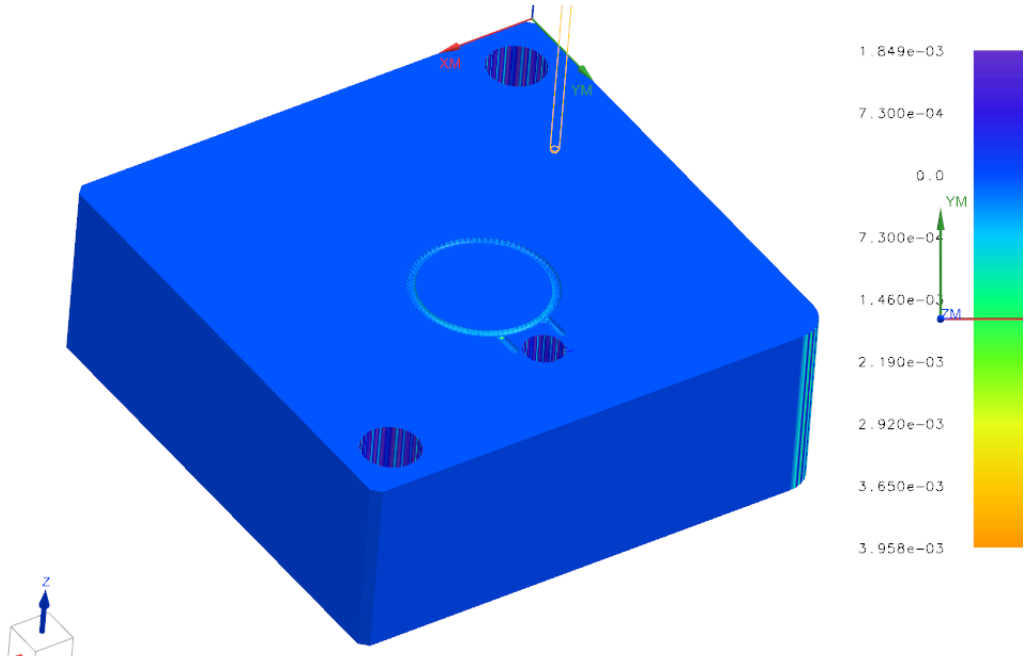

Figure 17. 3D analysis of the toolpaths for the rim cavity.

Total cutting time for this part was 00:17:53. Designing this mold was by far the easiest out of all as it only needed 2 operations, but we did experience bizarre behavior when machining as the actual was not matching what we were seeing in CAM. This was due to the cavity mill operation not cutting correctly and not going deep enough. Once we changed the operation from cavity mill to planar mill, it worked better and cut the correct depth. It also produced much better surface variation, seen in Figure 17.

Table 5: Feeds and Speeds We Used

Tool Diameter (in)	# of flutes	Cutting Speed (sfm)	Feed Per Tooth (IPT)	Linear Feedrate (IPM)	RPM
1/16”	2	164	0.0001	2	10,000
1/8”	2	327	0.0003	6	10,000
1/4”	2	400	0.0009	12	6,112
1/2”	2	400	0.0026	16	3,056
3/4”	2	400	0.0040	18	2,037

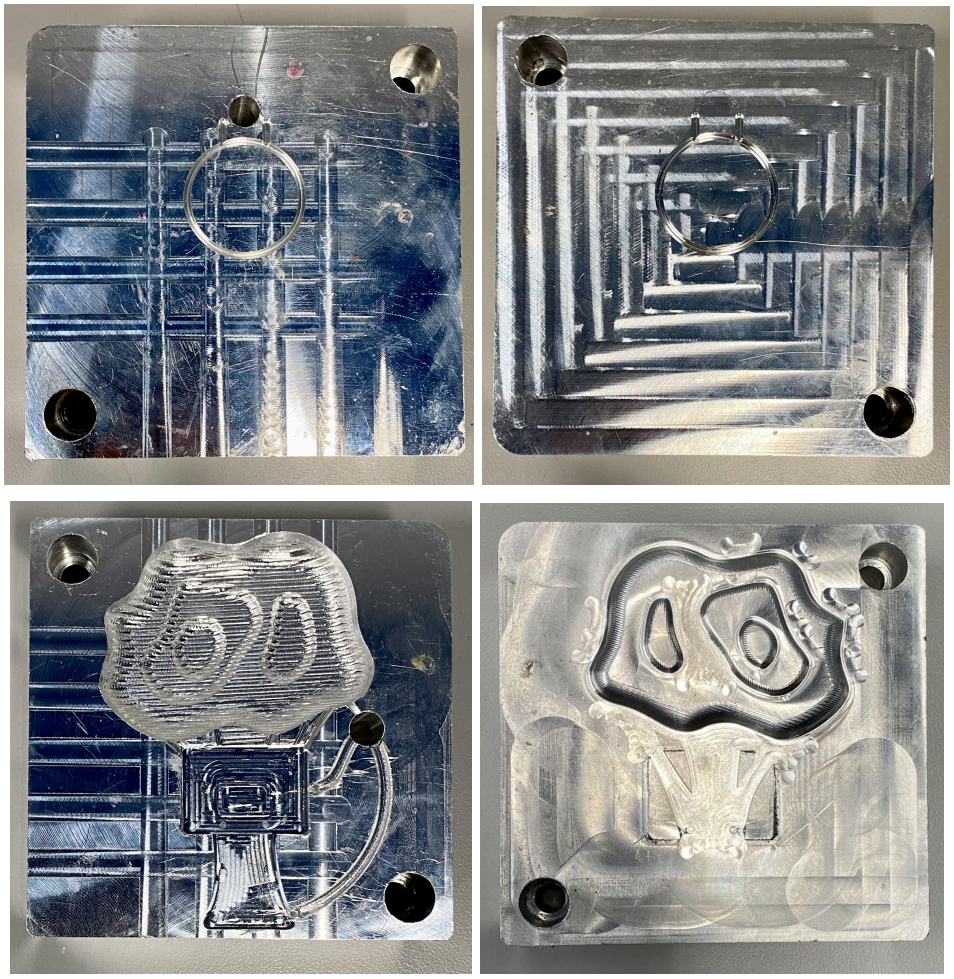

Figure 18: Mold Blocks

After a misstep on our first try machining, our molds came out well. We were able to achieve decent surface finish on the curves. As predicted by 3D analysis, surface variation was very minimal which allowed our final injection molded parts to be fairly smoothly.

Figure 19: CNC mold manufacturing in Action

Metrology

The two features that we identified to perform a metrology study on were the thickness of our pin feature on the rim and the horizontal end-to-end thickness of our backboard. We selected the pin thickness as our feature of interest in the rim part because it is most essential to the final assembly. The pin must have an effective interference fit with the holes in the tree part. We will specify the tolerance on this feature as 0.005”.

Regarding our selection of the end-to-end backboard thickness as a feature of interest, we chose this because its flat ends would let us get consistent measurement with calipers. Many of the features on the tree part are curved edges, and it would be incredibly difficult to ensure a method of landing the calipers at the same location for each measurement. The flat ends of the backboard were very repeatable. Our tolerance on this feature will be 0.01”. It can be looser than the pin feature because it is not critical to assembly in any way, while the pin is. A CAD screenshot of each measurement is shown below.

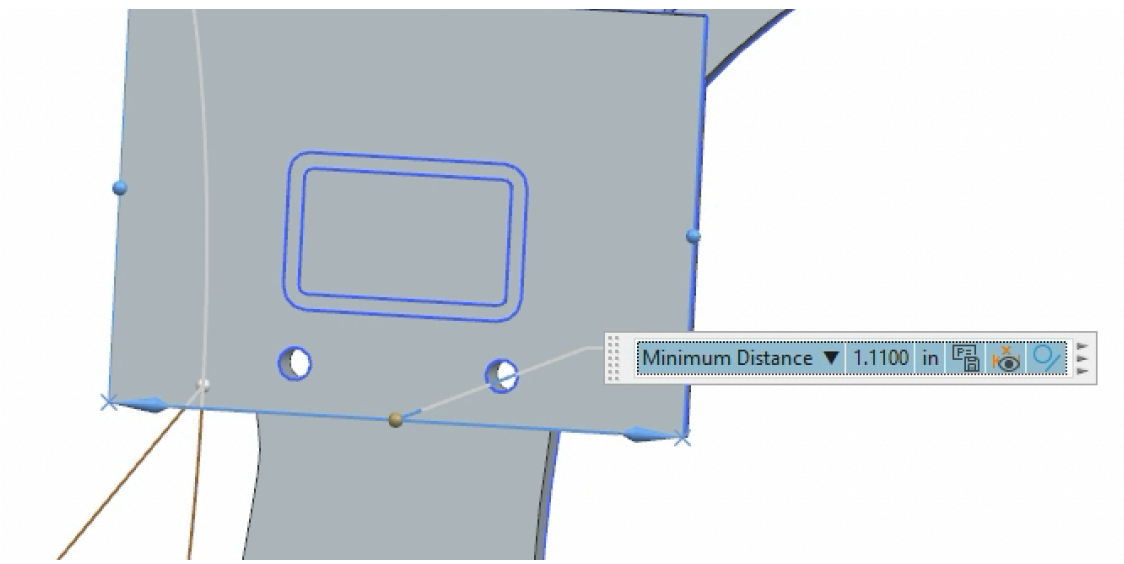

Figure 20: Backboard specified dimension in CAD

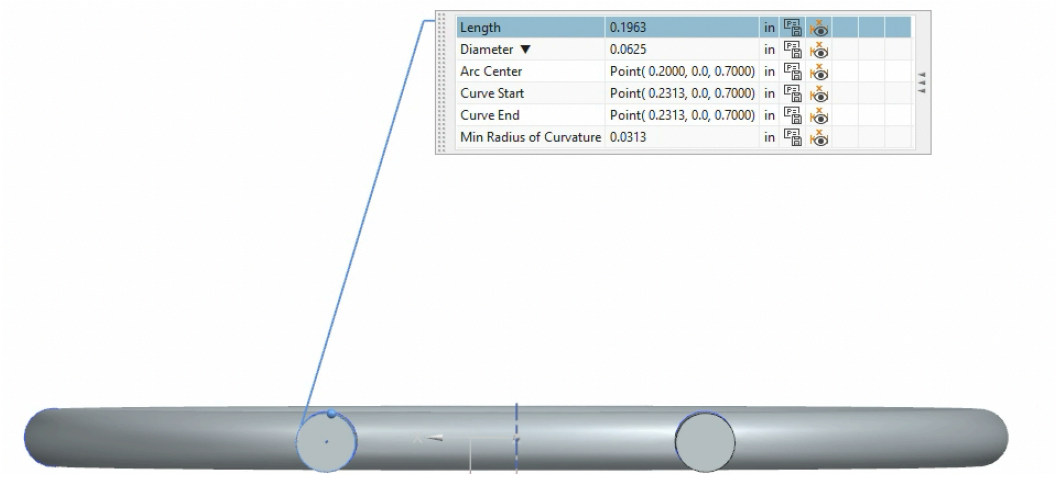

Figure 21: Pin specified dimension in CAD

Table 6: Production data for backboard feature

Part Number	Backboard Thickness (in)
1	1.091
2	1.094
3	1.092
4	1.095
5	1.095
6	1.094
7	1.091
8	1.091
9	1.085
10	1.091
Average	1.0919
Standard Deviation	0.0030

Specified Dimension for Backboard: 1.1100” ± 0.01”

Figure 22: Actual injection molded backboard

None of these measurements fall within the 0.01” tolerance on a 1.1100” specified dimension, which is very likely due to the shrinking of the part. The trend appears consistent throughout each of the parts. Our average measured value of 1.092” was 1.6% smaller than the theoretical measurement. This difference is very likely due to part shrinkage, as it is within the 1.0-2.5% expected shrinkage range for polypropylene. That being said, such a small sample size (n=10) is not sufficient to draw any significant statistical conclusion about our processes.

Table 7: Production data for pin feature

Part number	**Pin diameter (in)**
1	0.064
2	0.063
3	0.066
4	0.062
5	0.066
6	0.064
7	0.064
8	0.065
9	0.063
10	0.063
Average	0.064
Standard Deviation	0.0013

Specified Dimension for Pin: 0.0625” ± 0.005”

These measured values match up sufficiently well with our modeled value of 0.0625”. Every measurement falls within the specified 0.005” tolerance. We hypothesize that the reason some measured values are higher (despite expected shrinkage) is a very slight misalignment of the two halves of the rim within the molds. The misalignment may have counteracted the shrinking at similar rates. There could have also been errors in the mold manufacturing that led to this, but we are unsure what they would have been. The standard deviation of this part being much lower than that of the backboard feature leads us to believe that the misalignment was far more of a contributing factor here than rim shrinkage, as misalignment is constant for every part.

Overview

Our project was very successful overall, as we were able to produce sufficiently uniform parts that assembled as intended and did not have any significant defects. The vision that our group had at the start of the project lined up with our end product exceptionally well, thanks to our carefully produced CAD, CAM, molds, and injection molding.

The biggest difficulties we encountered were in the CNC machining phase of the project. We believe that the reason we had errors in our CNC the first time around was because of the CAM operations for both our tree cavity and our rim core. Upon reviewing our operations and trying again we got excellent results. The tools we chose all worked well, as did our selected operations and surface finishes.

Initial attempts at injection molding for both parts resulted in short shots. We found a groove with both parts around 520 °F and 3800 psi, slightly adjusting the injection time for each of them from there. Small sink marks were present but unavoidable on the tree piece.

Figure 23: Final injection molded parts

We noticed a significant amount of waste plastic was generated during our injection molding process, and since our part was so small, this volume of waste was larger than the plastic that we used in order to make our part. If this part was mass produced, it would be extremely inefficient. A possible solution to this problem would be to put several rims on a single mold so that the waste per part produced is decreased significantly.

Figure 24: Plastic waste from nozzle compared to part size (note a slight short shot here) and waste buildup after injection molding (right).

In the future, we should pay even closer attention to the machining portion of this project, as a simple mistake cost us 5 hours of time on the CNC mill. Furthermore, we should have added some features on the back side of the part to reduce sink, even if the uniform wall thickness is within the recommended range for the plastic (in this case: polypropylene).

Overall, we are satisfied with how our parts came out. We feel that we were able to effectively apply what we have learned about each step of the part design process, and our increased comfortability with skills like CAD, CAM, and injection molding contributed to us producing what we believe is a high-quality part.

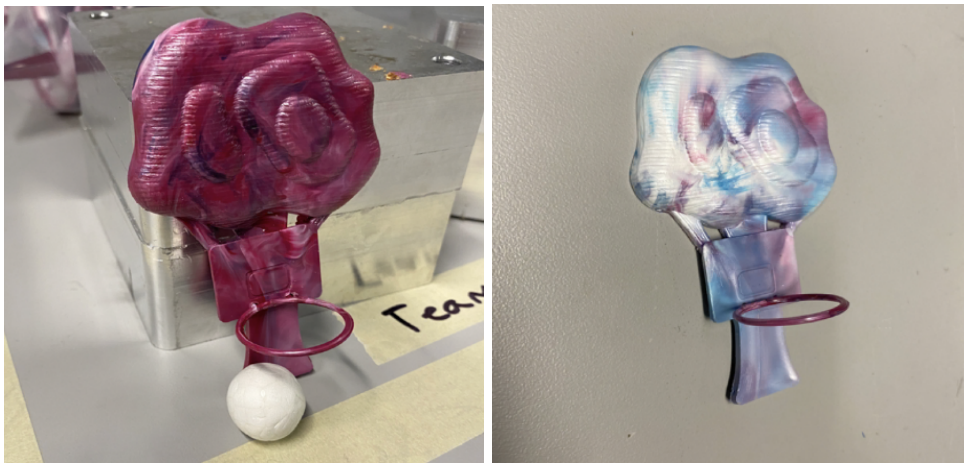

Figure 25: Two complete and assembled parts

Appendix A: Part Drawings

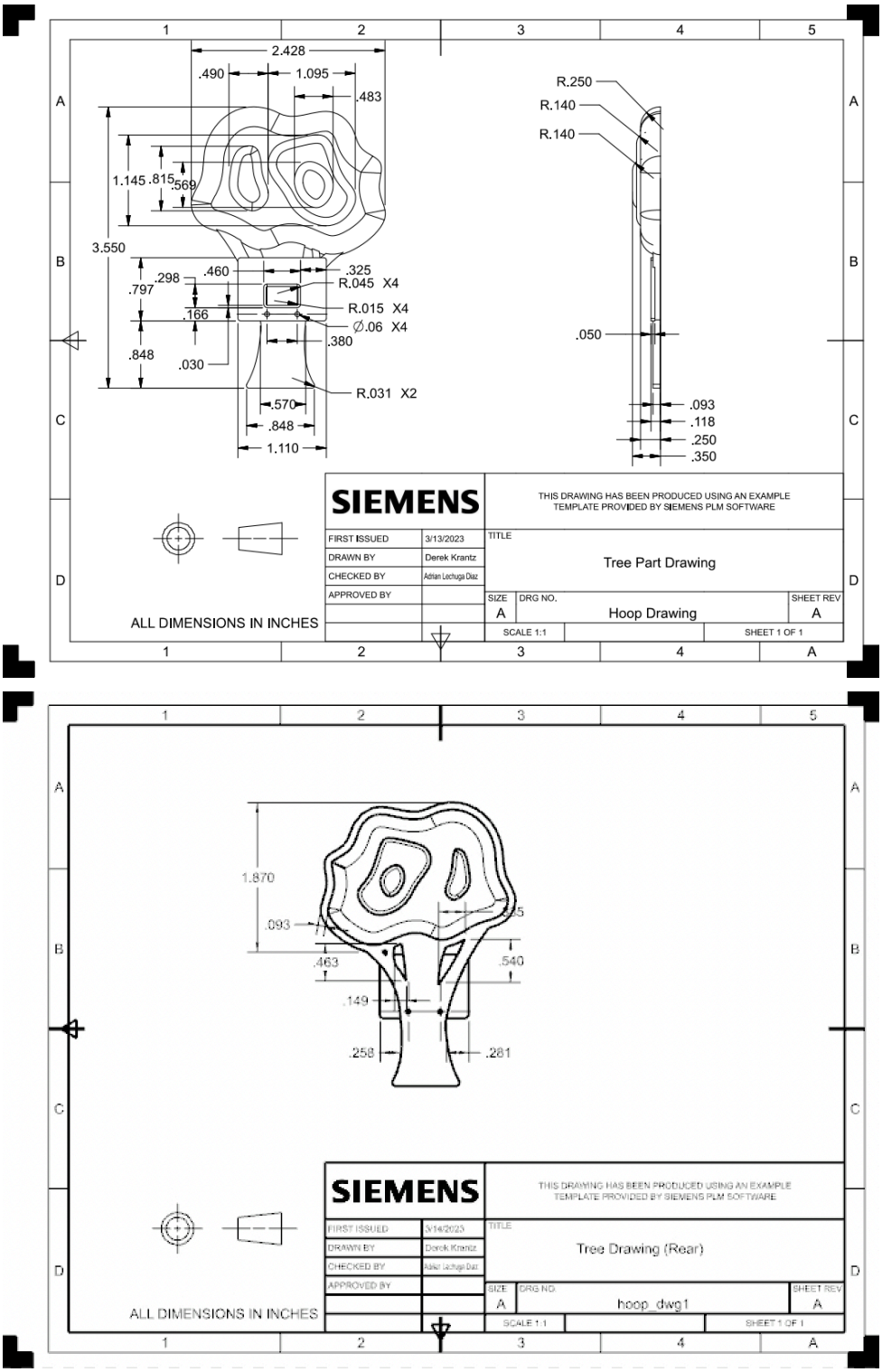

Figure A.1: Dimensioned drawings of tree part (front and rear)

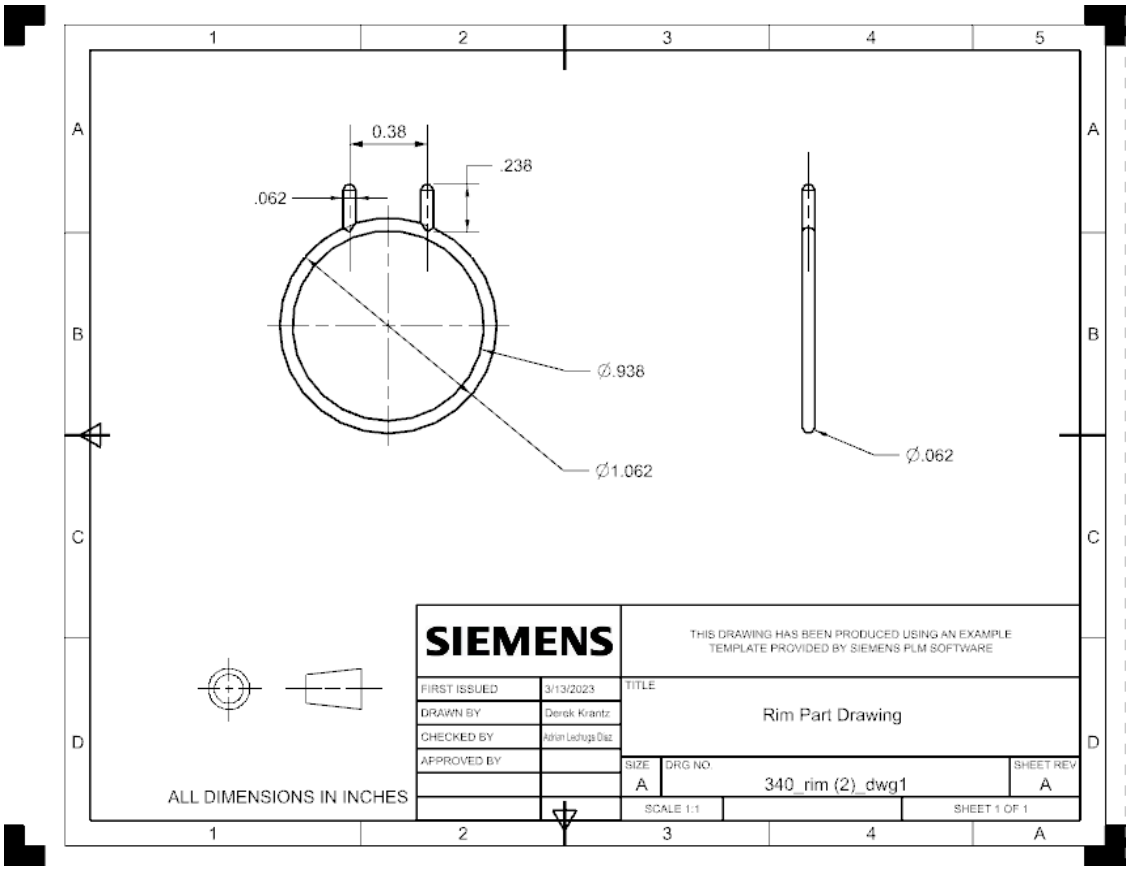

Figure A.2: Dimensioned drawing of rim part

Appendix B: Mold Drawings

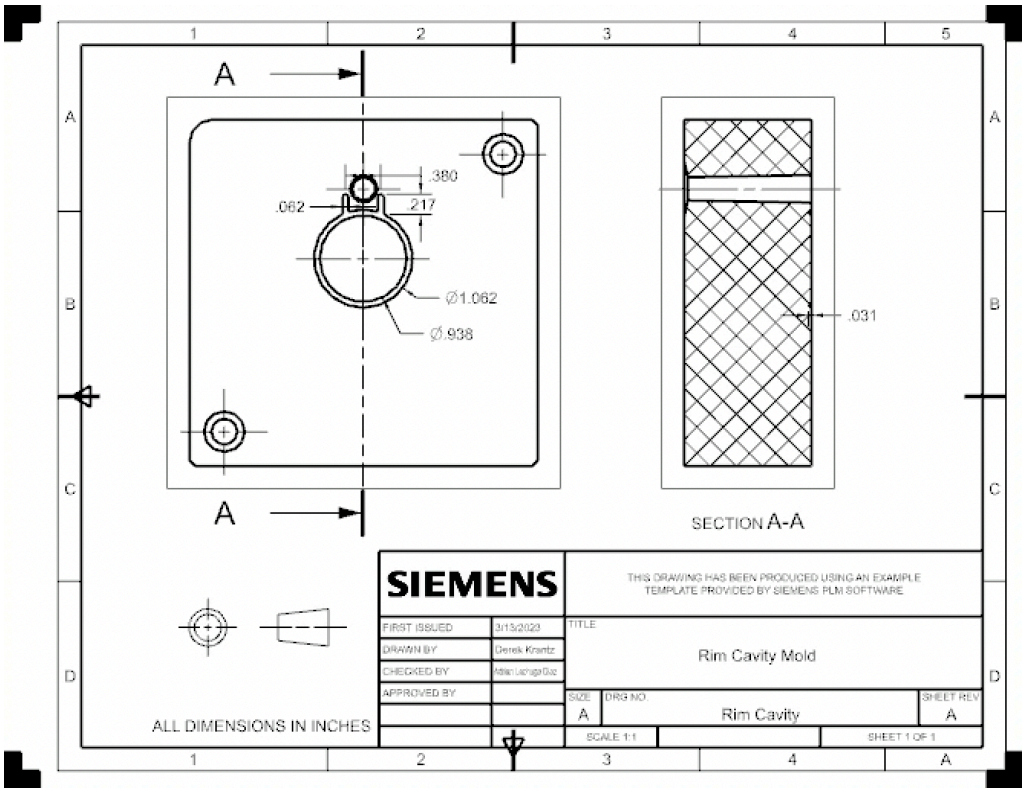

Figure B.1: Dimensioned Drawing of cavity mold for rim part

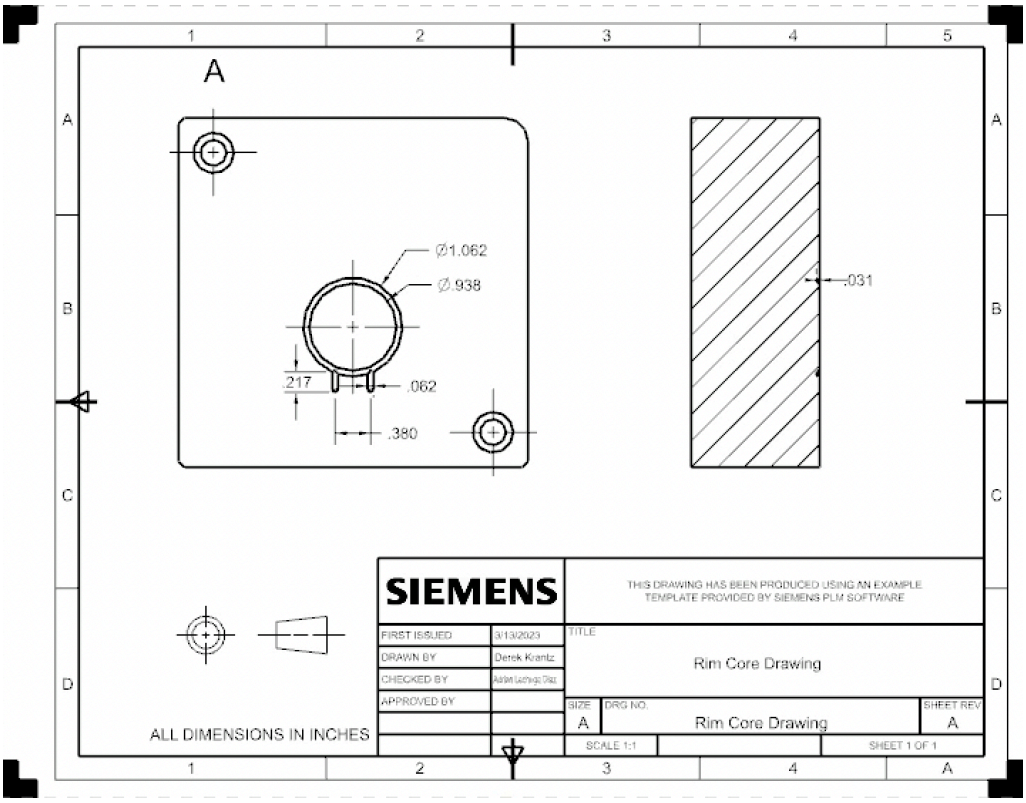

Figure B.2: Dimensioned drawing of core mold for rim part

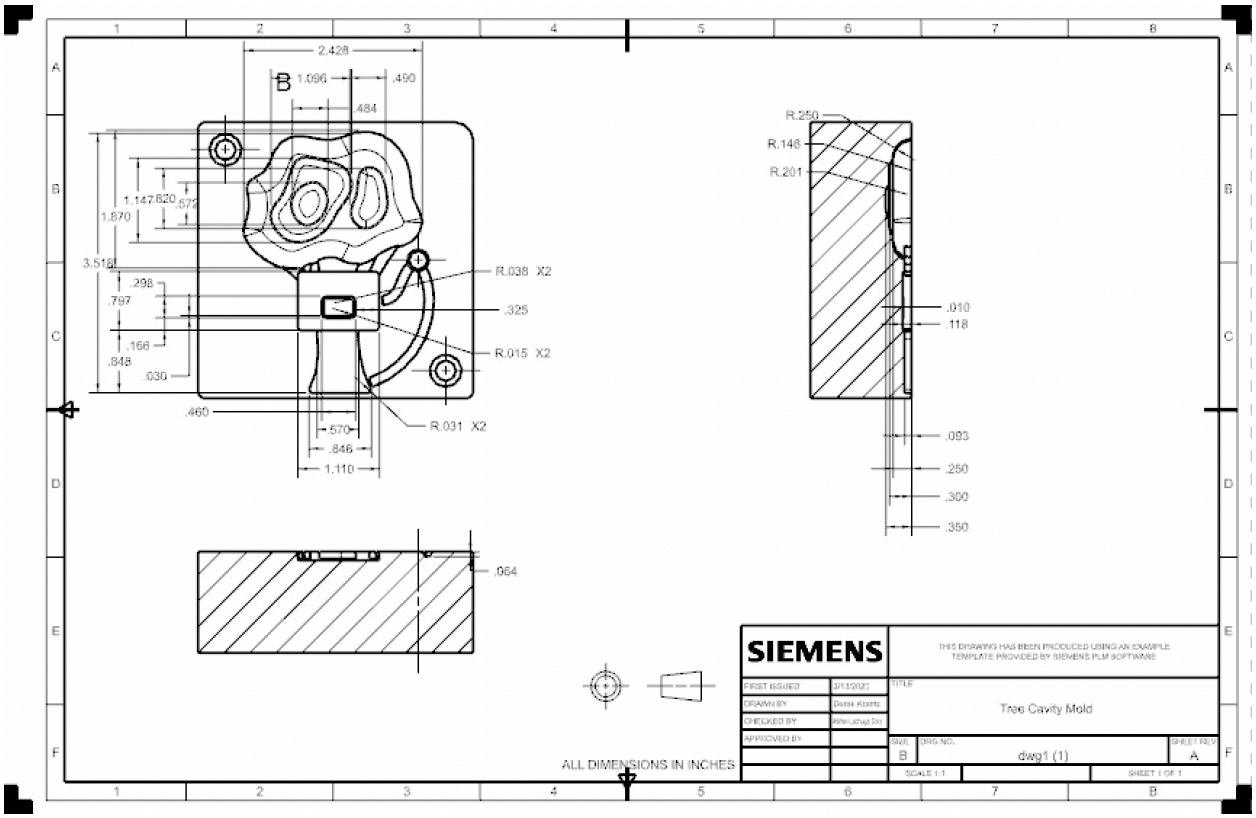

Figure B.3: Dimensioned drawing of cavity mold for tree part

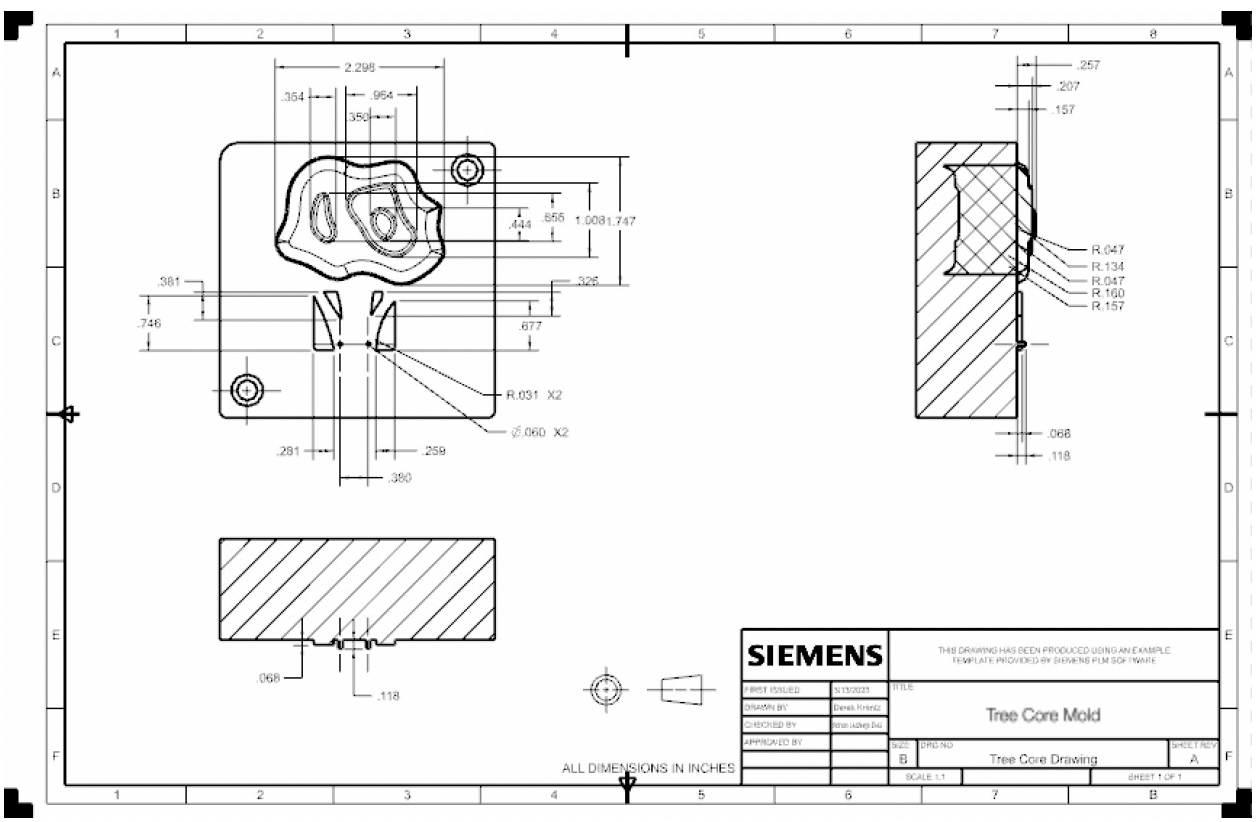

Figure B.4: Dimensioned drawing of core mold for tree part