Parts List

Table 3 lists replacement parts and accessories for the oxygen detector.

Table 3: Parts List

Part Number	Description
06-1248RK-03	3 foot length of sample tubing for the calibration kit
07-0039RK	Detector housing cap gasket
18-0400RK-01	Junction box with rubber spacers
33-0157RK	Hydrophobic membrane
65-1025RK	Oxygen plug-in sensor
65-2494RK	Oxygen replacement detector assembly (includes sensor)
71-0179RK	*65-2494RK/65-2497RK Oxygen Detector Operator's Manual* (this document)
81-0076RK	Zero air calibration cylinder, 17 liter
81-0076RK-01	Zero air calibration cylinder, 34 liter steel
81-0076RK-03	Zero air calibration cylinder, 103 liter
81-0078RK	100% nitrogen calibration cylinder, 17 liter
81-0078RK-01	100% nitrogen calibration cylinder, 34 liter steel
81-0078RK-03	100% nitrogen calibration cylinder, 103 liter
81-F301RK	Calibration kit for oxygen detector head, 103 liter
81-F301RK-LV	Calibration kit for oxygen detector head, 34 liter
81-1050RK	Regulator with gauge and knob, 0.5 LPM, for 17 liter and 34 liter steel calibration cylinders (cylinders with external threads)
81-1051RK	Regulator with gauge and knob, 0.5 LPM, for 34 liter aluminum, 58 liter, and 103 liter calibration cylinders (cylinders with internal threads)
81-1117RK	Calibration cup

Calibration Frequency

Although there is no particular calibration frequency that is correct for all applications, a calibration frequency of every 3 months is adequate for most oxygen detector applications. Unless experience in a particular application dictates otherwise, RKI Instruments, Inc. recommends a calibration frequency of every 3 months for the oxygen detector.

If an application is not very demanding, for example detection in a clean, temperature controlled environment, and calibration adjustments are minimal at calibration, then a calibration frequency of every 6 months is adequate.

If an application is very demanding, for example if the environment is not well controlled, then more frequent calibration than every 3 months may be necessary.

Calibration

This section describes how to calibrate the oxygen detector. It includes procedures to prepare for calibration, set the fresh air reading, set the zero reading, and return to normal operation. It describes calibration using a calibration kit that includes a calibration cup, calibration gas, sample tubing, and a fixed flow regulator with an on/off knob. RKI Instruments, Inc. recommends using a 0.5 LPM (liters per minute) fixed flow regulator.

Preparing for Calibration

1. Screw the calibration cup onto the bottom of the oxygen detector.
2. Screw the regulator into the zero air calibration cylinder. Make sure the regulator is off. It is off when the on/off knob is turned all the way clockwise.
3. Use the sample tubing to connect the regulator to the calibration cup.

NOTE: If you can verify that the oxygen detector is in a fresh air environment, you do not need to apply zero air to the detector before adjusting the fresh air reading.

4. Put the controller into its calibration program. See the controller operator's manual for instructions to enter the calibration program.

Setting the Fresh Air Reading

1. Follow the instructions in the controller operator's manual for setting the fresh air reading.
2. When the instructions call for applying zero air to the detector, turn the regulator's on/off knob counterclockwise to open it. Gas will begin to flow.
3. Allow the gas to flow for two minutes.
4. Set the fresh air reading according to the controller operator's manual.
5. Turn the regulator's on/off knob clockwise to close it.

Replacing Components of the Oxygen Detector

This section includes a procedure to replace the plug-in oxygen sensor, one to replace the hydrophobic membrane, and one to replace the entire oxygen detector assembly. In most cases, it is not necessary to replace the entire detector assembly.

Replacing the Plug-in Oxygen Sensor

CAUTION: *The plug-in sensor contains electrolyte which is an irritant. Do not disassemble the sensor when replacing it with a new one. If sensor electrolyte comes in contact with your skin, wash affected area thoroughly with soap and water.*

---

1. Turn off the controller.
2. Turn off or unplug power to the controller.
3. Unscrew the detector housing cap from the detector housing body.
4. Unplug and remove the old oxygen sensor.
5. Carefully plug the replacement sensor into the sockets located in the detector housing body.
6. Make sure the cap gasket is in place and screw the detector housing cap back onto the detector housing body.
7. Turn on power to the controller.
8. Turn on the controller and place into normal operation.

CAUTION: *Allow the replacement sensor to warm up for 5 minutes before you continue with the next step.*

---

9. Calibrate the detector as described in "Calibration" on page 14.

Replacing the Hydrophobic Membrane

1. Turn off the controller.
2. Turn off or unplug incoming power to the controller.
3. Unscrew the detector housing cap from the detector housing body.
4. Gently pry up the edge of the white hydrophobic membrane with a small flat blade screwdriver or a similar tool.
5. Peel off the hydrophobic membrane. It may be necessary to clean off the detector housing cap face to remove any residue left from the adhesive backed membrane.
6. Install the new membrane in the recess on the face of the detector housing cap.
7. Make sure the cap gasket is in place and screw the detector housing cap back onto the detector housing body.
8. Turn on the power to the controller.
9. Turn on the controller.

Start Up

This section describes procedures to start up the oxygen detector and place the detector into normal operation.

Introducing Incoming Power

1. Complete the installation procedures described earlier in this manual.
2. Verify that the power wiring to the controller is correct and secure. Refer to the controller operator's manual.
3. Turn on or plug in the incoming power, then turn on the controller.
4. Verify that the controller is on and operating properly. Refer to the controller operator's manual.

CAUTION: *Allow the detector to warm up for 5 minutes before you continue with the next section, "Setting the Fresh Air Reading".*

Setting the Fresh Air Reading

CAUTION: *If you suspect the monitoring environment is not a fresh air environment, use the zero air calibration cylinder to introduce "fresh air" to the detector and verify an accurate fresh air reading.*

1. Verify that the oxygen detector is in a fresh air environment (environment known to be free of toxic and combustible gases, and of normal oxygen content, 20.9%).
2. Verify a reading of 20.9% oxygen at the controller.

   If the display reading is 20.9% oxygen, start up is complete. The oxygen detector is in normal operation. If the display reading is not 20.9% oxygen, continue with step 3.
3. Perform a fresh air adjustment operation at the controller. See the controller operator's manual for instructions.

Maintenance

This section describes maintenance procedures. It includes preventive maintenance, troubleshooting, and component replacement procedures.

Preventive Maintenance

This section describes a preventive maintenance schedule to ensure the optimum performance of the oxygen detector. It includes daily and quarterly procedures.

Daily

Verify a display reading of 20.9% oxygen at the controller. Investigate significant changes in the display reading.

Quarterly

Calibrate the detector as described in "Calibration" on page 14. See the calibration frequency discussion in "Calibration Frequency" on page 14 to determine if a quarterly calibration schedule fits your needs.

NOTE: If your application does not require a specific mounting site, mount the detector at approximately breathing level.

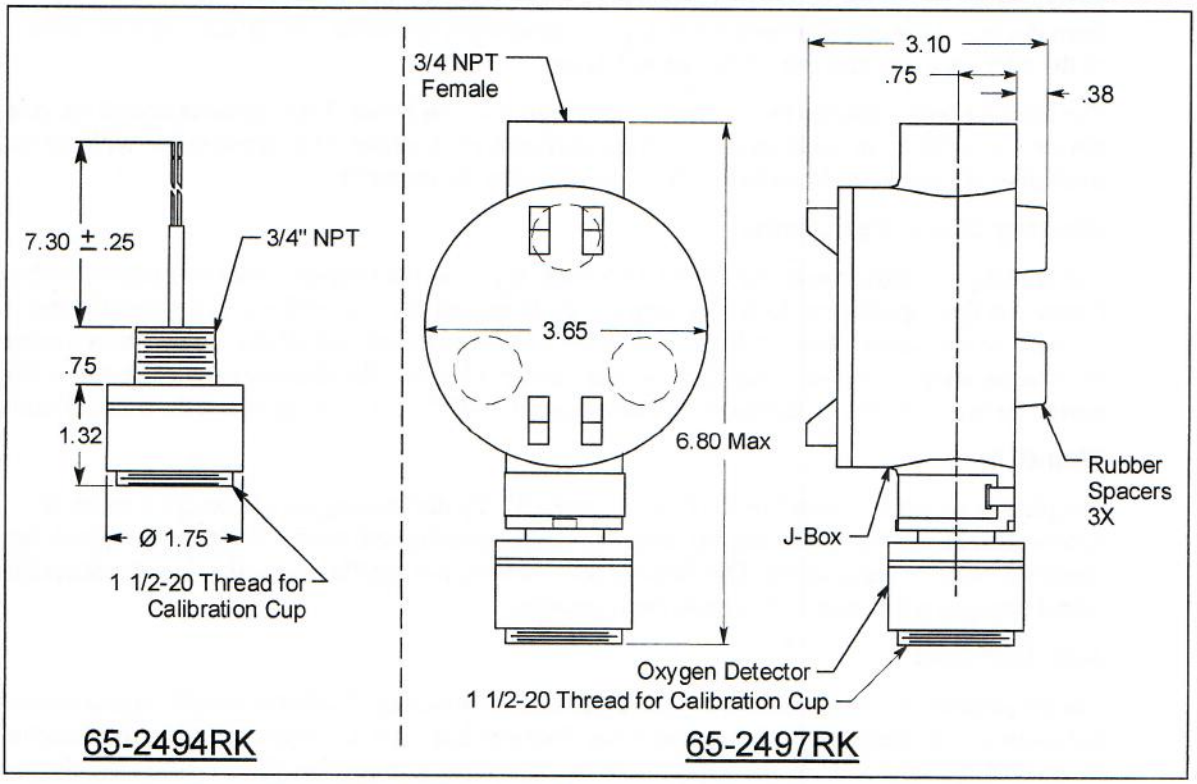

Figure 3: Outline & Mounting Dimensions, 65-2494RK & 65-2497RK

2. At the mounting site you select, hang or mount the junction box with the detector facing down (see Figure 3).

Wiring the Oxygen Detector to a Controller

WARNING: ***Always verify that power to the controller is OFF before you make wiring connections.***

1. Turn off the controller.
2. Turn off or unplug power to the controller.
3. If the detector is mounted remotely from a controller using the junction box, proceed to step 4.

   If the detector is mounted directly to a controller, it is normally factory wired. Confirm that the detector's white and green wires are connected to the appropriate controller detector terminals and skip to "Start Up" on page 10. See Figure 4, the controller operator's manual, and the controller's detector head specification sheet for the 65-2494RK detector for the wiring connections.
4. Remove the junction box cover.
5. Guide a two-conductor, shielded cable or two wires in conduit through the unused conduit hub of the junction box. Use appropriate conduit fittings and construction technique for the environmental rating of the junction box. The junction box is rated NEMA 4X.

Description

This section describes the components of the 65-2494RK and 65-2497RK detectors. The 65-2497RK includes the 65-2494RK oxygen detector and a junction box. A two point terminal strip is provided inside the junction box for detector connections. The 65-2494RK does not include a junction box. Figure 1 below shows the components of the 65-2497RK.

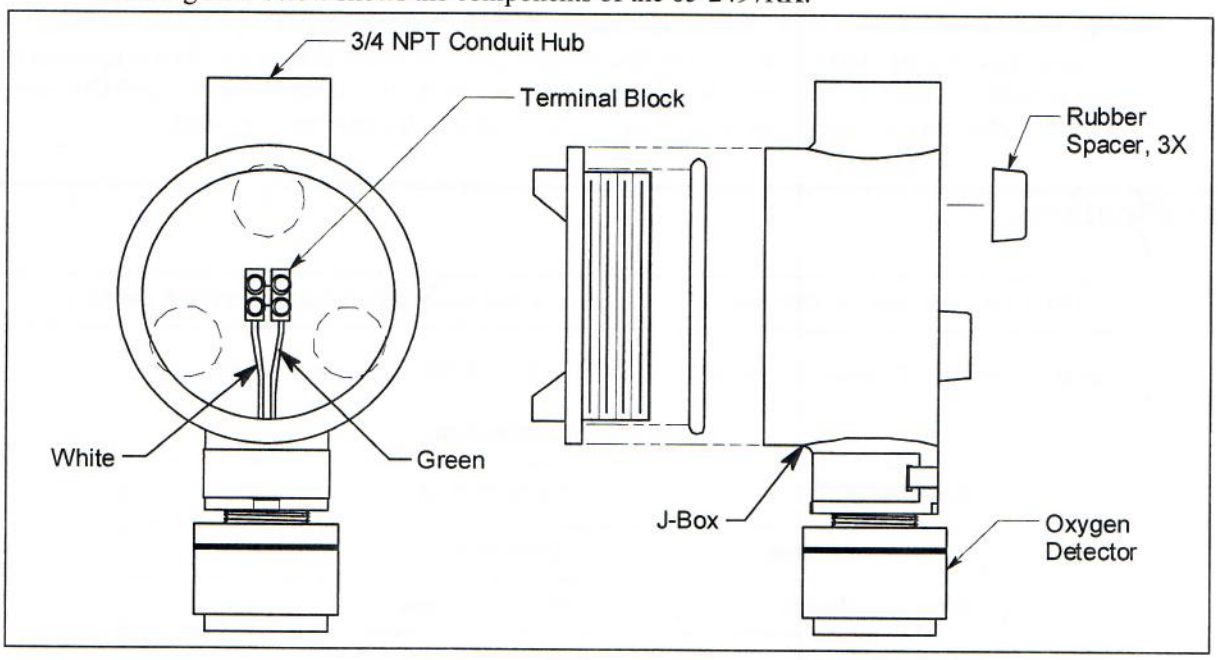

Figure 1: 65-2497RK Component Location

65-2494RK Oxygen Detector

The 65-2494RK oxygen detector consists of the detector housing body, detector housing cap, cap gasket, and the plug-in sensor.

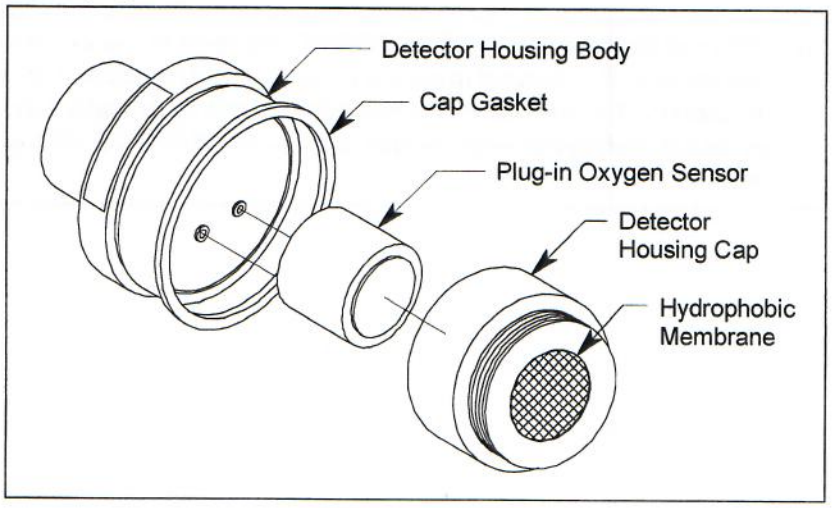

Figure 2: 65-2494RK Oxygen Detector Component Location

Table of Contents

Overview 5

Specifications 5

Description 6

65-2494RK Oxygen Detector 6
Junction Box 7

Installation 7

Mounting the Oxygen Detector 7
Wiring the Oxygen Detector to a Controller 8

Startup 10

Introducing Incoming Power 10
Setting the Fresh Air Reading 10

Maintenance 10

Preventive Maintenance 10
Troubleshooting 11
Replacing Components of the Oxygen Detector 12

Calibration Frequency 14

Calibration 14

Preparing for Calibration 14
Setting the Fresh Air Reading 14
Setting the Zero Reading 15

Parts List 16

WARNING

Read and understand this instruction manual before operating detector. Improper use of the detector could result in bodily harm or death.

Periodic calibration and maintenance of the detector is essential for proper operation and correct readings. Please calibrate and maintain this detector regularly! Frequency of calibration depends upon the type of use you have and the sensor types.
Typical calibration frequencies for most applications are between 3 and 6 months, but can be required more often or less often based on your usage.

Parts List

Table 10 lists replacement parts and accessories for the Beacon 110.

Table 10: Parts List

Part Number	Description
18-0107RK	Conduit Hub (3/4 in.)
43-0440RK	Reset Switch
43-4165RK	AC Fuse, 1/4" x 1 1/4", fast acting, 3A, 250 V
51-0065RK-01	Replacement lens assembly for strobe
51-0066RK	Strobe, red, 24 VDC, NEMA 4X
51-0096RK	Strobe/horn, 10-33 VDC, NEMA 4X
52-1016RK	Buzzer
71-0110RK	Beacon 110 Gas Monitor Operator's Manual (this document)

Troubleshooting

The troubleshooting guide describes symptoms, probable causes, and recommended action for problems you may encounter with the Beacon 110.

NOTE: This troubleshooting guide describes controller problems only. See the detector head operator's manual for troubleshooting procedures that apply to the detector head supplied with your Beacon 110.

Table 9: Troubleshooting the Beacon 110

Condition	Symptom(s)	Probable Causes	Recommended Action
No Power	• The display backlight is off and the display screen is blank.	• The power wiring is disconnected or misconnected. • One or both AC fuses is blown. • The display cable is disconnected or misconnected.	1. Verify that the wiring to the power source is correct and secure. 2. At the Beacon 110, verify that the wiring to the AC terminals is correct and secure. 3. Check the continuity of the AC fuses. 4. Verify that the display cable is connected. The display (ribbon) cable plugs into a connector on the top edge of the control PCB and on the main PCB below the control PCB. 5. If the power difficulties continue, contact RKI for further instruction.
Frequent or Suspect Alarms	• The Beacon 110 alerts you to frequent or suspect alarms while the detector head's fresh air readings remain on zero (20.9 for oxygen).	• The Beacon 110 is experiencing false readings due to RFI or EMI. • The detector head wiring is disconnected, misconnected, or intermittent.	1. Verify that the detector head wiring is properly shielded (see the detector head operator's manual). 2. Verify that the detector head wiring is correct and secure. 3. Verify that power and detector head wiring is routed through separate conduit hubs on the bottom of the Beacon 110 housing. 4. Increase the alarm on delay setting in Configuration Mode. 5. If the frequent or suspect alarm difficulties continue, contact RKI for further instruction.
Flickering Display	• The display reading flickers often.	• The Beacon 110 is experiencing false readings due to RFI or EMI. • The noise filter setting is too low. • The zero suppression setting is too low. • The display screen is malfunctioning.	1. Verify that the detector head wiring is properly shielded (see the detector head operator's manual). 2. Verify that the detector head wiring is correct and secure. 3. Verify that power and detector head wiring is routed through separate conduit hubs on the bottom of the Beacon 110 housing. 4. Increase the filter setting in Configuration Mode. 5. Increase the zero suppression setting in Configuration Mode. 6. If the display difficulties continue, contact RKI for further instruction.

4. If you want to skip adjusting the span (zero for an oxygen detector head) setting, press and release the DOWN/NO button. The display will indicate **Leaving Cal Mode** and the Beacon 110 will return to normal operation.

   If you want to continue with adjusting the span setting, press and release the UP/YES button. **APPLY** will alternate with **SPAN Gas (ZERO Gas** for an oxygen detector head) on the top display line and the current gas reading will be on the bottom display line.

5. Apply calibration gas to the detector. See the detector head operator's manual for instructions on how to apply gas to the detector.

   When calibration gas is applied, the Beacon 110 will freeze the display gas reading at the highest level reached while the gas was applied (lowest for an oxygen detector head).

6. After applying calibration gas for the required amount of time, usually two minutes, remove the gas from the detector. The Beacon 110 will continue to display the maximum gas response (lowest for an oxygen detector head) on the display and retain the response level in its memory.

7. Adjust the gas reading up or down to match the calibration gas cylinder concentration by using the UP/YES and DOWN/NO buttons, then press and release the ENTER button.

NOTE: An O_2 channel must be calibrated with 0 - 18% O_2. All other channels must be calibrated with a gas concentration between 10% and 100% of the channel's full scale value (ie. a 0 - 300 ppm CO channel must be calibrated with a CO concentration between 30 and 300 ppm).

---

8. The Beacon 110 will perform a span (zero for an oxygen detector head) operation. The display will indicate **SPAN Gas PASS (ZERO Gas PASS** for an oxygen detector head) for a few seconds, then indicate **SPAN Gas SAVED (ZERO Gas SAVED** for an oxygen detector head) before indicating **Leaving CAL Mode** for a few seconds.

9. The display will now alternate between the normal operation screen and the message **REMOVE CAL GAS** for 1 minute. If the calibration gas has not been removed from the detector, remove it now to avoid unwanted alarms.

   During this 1 minute period, the 4 - 20 mA output will remain fixed at 3.5 mA (17.4 mA if an oxygen detector head is installed) and the relays will remain in their non-alarm state to avoid unwanted alarms while the calibration gas clears from the detector. At the end of the 1 minute period, the **REMOVE CAL GAS** message will stop appearing and the Beacon 110 will return to normal operation.

10. Store the components of the calibration kit in a safe place.

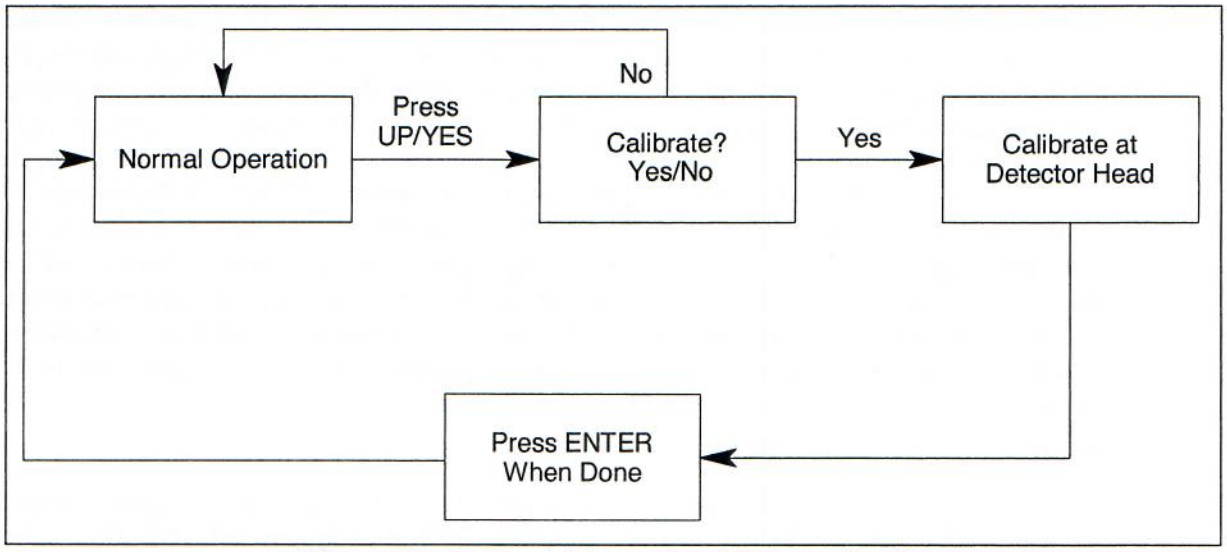

Figure 13: 4 - 20 mA Transmitter Detector Head

Entering Calibration Mode

WARNING: ***The Beacon 110 is not an active gas monitoring device during the calibration procedure. The 4-20 mA output signal will "freeze" at 3.5 mA (17.4 mA if an oxygen detector head is installed) and all relays will remain in their non-alarm state while the Beacon 110 is in Calibration Mode. The 4 - 20 mA output signal will not indicate current readings and the relays will not resume operating normally until the Beacon 110 is in normal operation again.***

1. While in normal operation, press and hold the UP/YES button for 5 seconds to enter Calibration Mode. Release the button when the following screen appears.

   Calib?
   YES/NO

2. If you want to exit Calibration Mode, press and release the DOWN/NO button. The Beacon 110 will indicate **Leaving CAL Mode** and the Beacon 110 will return to normal operation.

   If you want to continue with calibration, press and release the UP/YES button. If a direct connect detector head is installed, the display will indicate the target gas and **CAL Mode** for a few seconds before showing **FreshAir Adjust?**. If a 4 - 20 mA transmitter detector head is installed, the display will alternate between **CAL AT AMP** and the current gas reading.

NOTE: The Beacon 110 can support one detector head which is either a 4-20 mA detector head or a direct connect detector head. The following examples illustrate each type. See the detector head operator's manual for calibration information and procedures specific to your detector head.

Chapter 7: Maintenance

Overview

This chapter describes how to calibrate the Beacon 110 using Calibration Mode, replace the AC fuses, and preventive maintenance procedures for the Beacon 110. It includes a troubleshooting guide for problems you may encounter with the Beacon 110.

Calibration Frequency

Although there is no particular calibration frequency that is correct for all applications, a calibration frequency of every 3 to 6 months is adequate for most Beacon 110 applications. Unless experience in a particular application dictates otherwise, RKI Instruments, Inc. recommends a calibration frequency of every 3 months.

If an application is not very demanding, for example detection in a clean, temperature controlled environment where a combustible or toxic gas is not normally present, and calibration adjustments are minimal at calibration, then a calibration frequency of every 6 months may be adequate.

If an application is very demanding, for example if a combustible or toxic gas is present often and in significant concentrations or the environment is not well controlled, then more frequent calibration than every 3 months may be necessary. For combustible gas detection, if potential catalyst poisons are known or likely to be present, more frequent calibration than every 3 months will be necessary.

Calibration Mode

Calibration Mode is used to calibrate the Beacon 110's detector head. The Beacon 110 can support both direct connect (internal amp) and 4-20 mA transmitter (remote amp) detector heads. Each type has special considerations when calibrating:

- Direct connect detector head.

  If a direct connect detector head is installed, then all calibration adjustments are made at the Beacon 110 after calibration gas is applied to the detector.

NOTE: A direct connect O_2 channel must be calibrated with 0 - 18% O_2. All other direct connect channels must be calibrated with a gas concentration between 10% and 100% of the channel's full scale value (ie. a 0 - 300 ppm CO channel must be calibrated with a CO concentration between 30 and 300 ppm).

- 4-20 mA transmitter detector head.

  If a 4-20 mA transmitter detector head is installed, then all calibration adjustments are made at the detector head while calibration gas is being applied to the detector.

6. If you changed the input type above, you must select a gas type. Proceed to step 7.

   If you did not change the input type, you can decide if you want to select the gas type. If you do not want to select the gas type, press and release the DOWN/NO button. The display will indicate **NO CHANGE** and the Beacon 110 will return to normal operation with the previous setup. If you do want to select the gas type, press the UP/YES button and the display will indicate **GasType?** on the top display line and the gas type choice on the bottom display line.

7. Use the DOWN/NO button to scroll through the choices of gas types. When you come to the desired choice, press the UP/YES button to select it.

   If you selected one of the defined gas types such as OXYGEN or CO, the display will ask **SAVE IT? YES/NO**. Proceed to step 8.

   If you selected the OTHER gas type, the display will indicate **GAS NAME** on the top display line and bottom line will be blank with the cursor flashing in the far left. Proceed to step 9.

8. If you did not change the input type above and want to discard the gas type selection, press and release the DOWN/NO button. The display will ask **DO OVER? YES/NO**. Press the DOWN/NO button. The display will ask **ABORT? YES/NO**. Press the UP/YES button. The display will indicate **Aborting Gas Type**, then **NO CHANGE** and the Beacon 110 will return to normal operation.

   If you want to save the gas type selection, press and release the UP/YES button. The display will indicate **Gas Type Updated**, show the target gas and the detection range for a few seconds, then the Beacon 110 will enter Configuration Mode so that the parameter settings in Configuration Mode can be verified or changed.

9. Perform the following steps to define the gas name, detection range, and units if you selected the OTHER gas type.

   - With **GAS NAME** on the top display line and the cursor flashing in the far left on the bottom display line, use the UP/YES and DOWN/NO buttons to select a character for the first character of the gas name and press ENTER to save it. The cursor will move to the next position. Repeat this process until the last character is saved.
   - The display will ask **SAVE IT? YES/NO**. Press and release the UP/YES button. The display will indicate **RANGE . . .** on the top display line prompting you to enter a full scale value and the bottom line will be blank with the cursor flashing on the far left.
   - Use the UP/YES and DOWN/NO buttons to enter a number for the first digit of the full scale value and press ENTER to save it. The cursor will move to the next position. Repeat this process until you have entered the full scale value, for example 30.0, leaving extra positions blank before pressing ENTER.
   - When you have pressed ENTER for the last time, the display will ask **SAVE IT? YES/NO**. Press and release the UP/YES button. The display will indicate **UNITS?** on the top line and the units choice on the bottom line of the display.
   - Use the DOWN/NO button to scroll through the choices until you find the desired units. (If you select the OTHER choice, perform the same procedure described above for entering the gas name and range.)
   - Press the UP/YES button to save the units. The Beacon 110 will proceed to Configuration Mode.

Chapter 6: Input Mode

Overview

This chapter describes how to use Input Mode to select the Beacon 110's detector head input type and the gas type. The detector head input type determines whether a direct connect type or a 4 - 20 mA type of detector head will be used and the gas type determines the target gas and detection range.

Input Mode includes a 5-minute time-out feature. If you do not press a button for 5 minutes, the Beacon 110 automatically returns to normal operation.

NOTE: If the Beacon 110 enters normal operation because of a program time-out, it enters a warm-up period just as it does when it is first turned on.

Selecting the Detector Head Input and Gas Type

1. While in normal operation or during the warm-up sequence, press and hold the UP/YES and DOWN/NO buttons for five seconds. Release them when the following screen appears.

   Select
   Input?

2. If you want to exit Input Mode, press and release the DOWN/NO button. The Beacon 110 will indicate **NO CHANGE** and return to normal operation without making any changes to the detector head input type or gas type.

   If you want to continue in Input Mode, press and release the UP/YES button. The top display line will indicate **Input?** and the bottom display line will indicate the detector head input type choice.

3. Use the DOWN/NO button to scroll through the choices of input types. Table 8 below lists the choices of input type for the Beacon 110.

Table 7: Configuration Parameters

Parameter (Factory Set Value)	Description
ALARM-1 (level) See the Beacon 110 Detector Head Specification Sheet for the detector head installed	The gas reading at which the Beacon 110 initiates an alarm 1 condition.
ALARM-1 (activation) (Decrease for oxygen, Increase for all other types)	Indicates if the alarm 1 circuit is activated by gas readings increasing (**Increase**) or decreasing (**Decrease**) to the ALARM-1 Level.
ALARM-1 (relay action) (N. DE-EN)	If set as **N. DE-EN**, the alarm 1 relay is de-energized in normal operation and energizes when an alarm 1 condition is initiated. If set as **N. EN**, the alarm 1 relay is energized in normal operation and de-energizes when an alarm 1 condition is initiated.
ALARM-1 (relay reset) (SELF-RST for oxygen, LATCH for all other channel types)	If set as **LATCH**, you must press the reset switch to reset the alarm 1 circuit after the alarm 1 condition passes. If set as **SELF-RST**, the Beacon 110 automatically resets the alarm 1 circuit after the alarm 1 condition passes.
A1Strobe (None if no strobe is installed, Non Reset if a strobe is installed)	If set as **None**, there is no strobe operation. If set as **NonReset**, it is not possible to turn off the strobe with the reset switch while the Beacon 110 is in an alarm 1 condition. If set as **CanReset**, the strobe can be turned off while the Beacon 110 is in an alarm 1 condition by pressing the reset switch.
A1 OnDy (alarm 1 on delay) (1 secs)	The amount of time the Beacon 110 delays activation of the alarm 1 circuit once an alarm 1 condition is initiated.
A1 OffDy (alarm 1 off delay) (0 sec.)	The amount of time the Beacon 110 delays turning off the alarm 1 circuit once an alarm 1 condition passes. This parameter appears only if the alarm 1 relay reset setting is set to **SELF--RST**.
ALARM-2 (level) See the Beacon 110 Detector Head Specification Sheet for the detector head installed	The gas reading at which the Beacon 110 initiates an alarm 2 condition.
ALARM-2 (activation) (Increase)	Indicates if the alarm 2 circuit is activated by gas readings increasing (**Increase**) or decreasing (**Decrease**) to the ALARM-1 Level.
ALARM-2 (relay action) (N. DE-EN)	If set as **N. DE-EN**, the alarm 2 relay is de-energized in normal operation and energizes when an alarm 2 condition is initiated. If set as **N. EN**, the alarm 2 relay is energized in normal operation and de-energizes when an alarm 2 condition is initiated.
ALARM-2 (relay reset) (SELF-RST for oxygen, LATCH for all other channel types)	If set as **LATCH**, you must press the ENTER button to reset the alarm 2 circuit after the alarm 2 condition passes. If set as **SELF-RST**, the Beacon 110 automatically resets the alarm 2 circuit after the alarm 2 condition passes.

Low DC Power Alarm

Low DC Power Alarm Indications

This section describes the audible and visual indications for a low DC power condition and suggests response to a low DC power condition. This condition only applies when DC power is used as a primary or backup power source.

The Beacon 110 senses a DC low power condition when the DC power source is 18.5 volts or less.

WARNING: While in a low power condition, the Beacon 110 is not an active gas monitor.

When the Beacon 110 senses a low DC power condition, it alerts you as follows:

- The fail LED turns on.
- The message **LowPower** is indicated on the top line of the LCD and the input voltage is displayed on the bottom line of the LCD.

NOTE: The low DC power alarm cannot be cleared using the reset switch.

When the DC input voltage increases to 19.0 volts, the low DC power alarm is cleared and the Beacon 110 will begin its warm-up sequence.

Responding to a Low DC Power Condition

If DC power is the **primary** power source:

1. For a *temporary* DC power source, disconnect primary DC power at the Beacon 110, then connect a 24 VDC battery.
2. Determine and correct the cause of primary DC power loss.

   When the DC power source rises above 19.0 volts, the Beacon 110 begins the warm up process.
3. Verify that the Beacon 110 enters normal operation after its warm-up sequence.

If DC power is the **backup** power source:

1. If a non-rechargeable battery is used for backup, replace the battery.
2. Determine and correct the cause of primary AC power loss. When backup DC or primary AC power is restored, the Beacon 110 begins the warm up process.

   If the Beacon 110 was purchased with the battery charging feature, when AC power is restored, the Beacon 110 charges the backup battery with a charge current of approximately 100 mA until it is fully recharged. Charge time varies depending on the battery size and how much the battery was depleted. Once the battery is fully charged, the Beacon 110 maintains the charge with the 100 mA charge current.
3. Verify that the Beacon 110 enters normal operation after its warm-up sequence.

Alarm 1 Condition

Alarm 1 Condition Indications

When the gas reading reaches the alarm 1 setpoint, the Beacon 110 senses an alarm 1 condition. The Beacon 110 alerts you to an alarm 1 condition as follows:

- The alarm 1 LED turns on.
- The gas reading alternates with the **ALARM-1** message.
- The buzzer sounds a pulsing tone.
- The alarm 1 relay energizes.
- If the optional strobe is installed and set to operate for alarm 1, it flashes.

Responding to an Alarm 1 Condition

1. Follow your established procedure for a low level combustible or toxic gas condition or a decreasing oxygen concentration condition.
2. Oxygen alarms are factory set as self-resetting and will automatically clear when the oxygen reading rises above the alarm 1 setpoint.
3. Alarms for all other gas types are factory set as latching. After the gas reading falls below (or rises above for oxygen) the alarm 1 setpoint, press the reset switch to reset the alarm 1 circuit. Resetting the alarm 1 circuit silences the buzzer, turns off the alarm 1 LED, returns the LCD to the normal operation screen, de-energizes the alarm 1 relay, and turns off the strobe if it is installed and set to operate for alarm 1.

NOTE: If the reset switch is pressed while the Beacon 110 is in an alarm 1 condition, the buzzer will be silenced and the alarm 1 LED will flash. If the strobe is installed and its alarm 1 operation is set to **CanReset** in Configuration Mode, the strobe will turn off.

You cannot de-energize the alarm 1 relay until the gas reading falls below (above for oxygen) the alarm 1 setpoint.

Alarm 2 Condition

Alarm 2 Condition Indications

When the gas reading reaches the alarm 2 setpoint, the Beacon 110 senses an alarm 2 condition. The Beacon 110 alerts you to an alarm 2 condition as follows:

- The alarm 2 LED turns on.
- The gas reading alternates with the **ALARM-2** message.
- The buzzer sounds a pulsing tone.
- The alarm 2 relay energizes.
- If the optional strobe is installed and set to operate for alarm 2, it flashes.

NOTE: If the Beacon 110 is in both an alarm 1 and alarm 2 condition, both the alarm 1 and alarm 2 LEDs will be on, the gas reading will alternate with the **ALMS 1&2** message, and both alarm relays will energize.

- If the Beacon 110 goes into a fail condition, after a 30 second delay, the signal output is fixed below 2.4 mA until the fail alarm is cleared. During the 30 second delay, the output follows the detector output. In the case of a downscale reading, the displayed gas reading will only go as low as -10% of full scale but the signal output will continue to track the reading even if it's lower than -10% of full scale.

Viewing and Resetting Min/Max Readings

The reset switch may be used to view and reset the minimum and maximum gas readings.

NOTE: Minimum and maximum readings are reset if the instrument is turned off.

1. While the Beacon 110 is in normal operation, press and hold the reset switch button for 5 seconds.
2. The display will indicate the minimum reading on the bottom display line and the maximum reading on the top display line for about 3 seconds before indicating **<RESET> TO CLEAR**.
3. To return to normal operation without resetting the minimum and maximum readings, do not press the reset switch button and allow the unit to return to normal operation. It will return to normal operation in about 5 seconds.

   To reset the minimum and maximum readings, press and hold the reset switch button while the **<RESET> TO CLEAR** message is on the display until the display indicates **Min/MAX Is RESET.** Release the reset switch button.The unit will then return to normal operation in about 5 seconds.

Battery Charging (Optional)

The Beacon 110 has an optional backup battery charging feature. In order for this feature to be included, the Beacon 110 must be ordered with this feature. Consult RKI Instruments, Inc. for ordering information.

The battery charging circuit is designed to charge lead acid type batteries. If AC power is used as primary power and a backup battery is connected to the Beacon 110's EXT DC/24V BATT terminals as shown in Figure 8 on page 19, the battery charging feature will charge the battery if it is depleted and keep it charged with a charge current of approximately 100 mA.

CAUTION: *When a battery is used as backup power and the charging feature is included in the Beacon 110, do not use a non-rechargeable battery or backup battery that has a charging feature. Use RKI backup battery 49-8102RK or an appropriately rated 24 VDC rechargeable lead acid type battery.*

6. The LCD display will indicate the firmware version when the Beacon 110 is first powered up and will then count down a one minute warm-up period before normal operation begins. During normal operation, the display will indicate the current gas reading and target gas. Verify that the display is indicating the current gas reading and target gas after the warm-up period is complete and normal operation begins, for example:

METHANE 0 %LEL

NOTE: To prevent unwanted alarms during warm up, the alarm circuits are not active during the warm-up period.

7. Perform the start-up procedure for the RKI detector head or user supplied 4 - 20 mA transmitter as described in the detector head or transmitter operator's manual.

CAUTION: *Only use the two factory installed conduit hubs on the bottom of the housing for wire entry into the housing. Do not drill the housing for any reason. See "Routing Wiring Into the Beacon 110 Housing" on page 17 for more information.*

5. Route the wires in conduit or shielded cable from the detector head through the right conduit hub into the Beacon 110. See Table 5 below for wire size and distance guidelines.
6. Unshielded twisted pair cable in conduit or shielded twisted pair cable is recommended for all the direct connect detector heads. For the LEL detector, pair and twist the **R** & **B** wires and the **W** & **G** wires. Shielded cable or wires in conduit are recommended for the 2-wire and 3-wire 4 - 20 mA transmitters.
7. Connect the wires from the detector head to the appropriate detector/transmitter terminals. See the detector head operator's manual and the Beacon 110 Detector Head Specifications sheet for detector head connections to the Beacon 110. If shielded cable is used, connect the cable shield's drain wire at the Beacon 110 to the ground stud on the main PCB.

CAUTION: *Do not route power and detector head wiring through the same conduit hub. The power wiring may disrupt the transmission of the detector head's to the Beacon 110.*

Table 5: Wire Size Guidelines for RKI Detector Head Wiring

Detector Head Type	Number of Wires to Controller	Max Distance to Controller w/18 Gauge Wire	Max Distance to Controller w/16 Gauge Wire	Max Distance to Controller w/14 Gauge Wire
Direct Connect LEL	4	500 ft.	1,000 ft.	2,000 ft.
Direct Connect Oxygen	2	500 ft.	1,000 ft.	2,000 ft.
Direct Connect H2S	2	500 ft.	1,000 ft.	2,000 ft.
Direct Connect CO	2	500 ft.	1,000 ft.	2,000 ft.
Direct Connect ESM-01 type	2	500 ft.	1,000 ft.	2,000 ft.
2-Wire 4 - 20 mA Transmitter	2	2,500 ft.	5,000 ft.	8,000 ft.
3-Wire 4 - 20 mA Transmitter	3	2,500 ft.	5,000 ft.	8,000 ft.

Connecting User-Supplied 4 to 20 mA Transmitters

The Beacon 110 may be used with a user supplied 2-wire or 3-wire source type 4 - 20 mA transmitter which runs on 24 VDC. When this is done, the Beacon 110 is normally setup at RKI Instruments with the following parameters: item name (example: Pressure), unit of measure (example: PSI), and full scale (example: 100). For example, a Beacon 110 can be setup for "Pressure" with units of "PSI" and a full scale of "100" PSI.

Perform the following procedure to connect a 4 to 20 mA transmitter that you supply to the Beacon 110.

1. Turn off or unplug power to the Beacon 110.
2. Open the Beacon 110 door and turn off the power switch.

Connecting External Alarms

Perform the following procedure to connect external alarms to the Beacon 110. The relays are form C, single-pole, double-throw (SPDT) and rated for 10 amps at 115/220 VAC (resistive) or 10 amps at 30 VDC (resistive).

WARNING: ***Do not connect external alarms to the External DC In terminals on the controller terminal strip.***

1. Turn off or unplug all incoming power to the Beacon 110.
2. Open the housing door, then place the power switch in the OFF position.

CAUTION: *The power switch does not control DC input power.*

3. Locate the alarm terminal strip. See Figure 1 on page 8.
4. Install an appropriately rated cable bushing or conduit in the left conduit hub on the bottom of the Beacon 110 housing. This hub is typically used for power wiring and may already have conduit or other fittings installed because of this.

CAUTION: *Only use the two factory installed conduit hubs on the bottom of the housing for wire entry into the housing. Do not drill the housing for any reason. See "Routing Wiring Into the Beacon 110 Housing" on page 17 for more information.*

5. Guide the wiring of the external alarm through the left conduit hub on the bottom of the Beacon 110 housing.

CAUTION: *Do not route the external alarm wiring and detector wiring through the same conduit hub. The external alarm wiring may disrupt the transmission of the detector signal to the Beacon 110.*

6. Connect the leads from the external alarm to the appropriate terminals on the alarm terminal strip as shown in Figure 9 to obtain the desired operation.

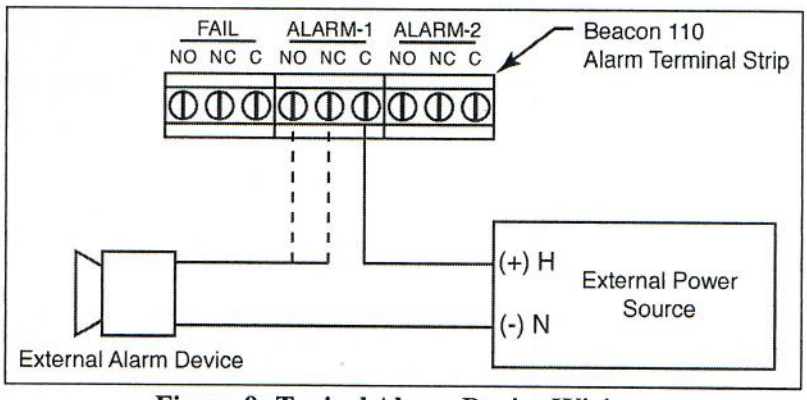

Figure 9: Typical Alarm Device Wiring

7. Repeat steps 5 and 6 for additional alarm devices.

WARNING: ***Verify that the power source is unplugged or turned off before you continue with this procedure.***

1. Turn off or unplug all incoming power to the Beacon 110.
2. Open the housing door, then place the power switch in the OFF position.

CAUTION: *The power switch does not control DC input power.*

3. Install an appropriately rated cable bushing or conduit to the left conduit hub on the bottom of the Beacon 110 housing.

CAUTION: *Only use the two factory installed conduit hubs on the bottom of the housing for wire entry into the housing. Do not drill the housing for any reason. See "Routing Wiring Into the Beacon 110 Housing" on page 17 for more information.*

4. Locate the 3-point AC in terminal strip in the lower left corner of the main PCB (see Figure 1 on page 8). The terminals are labelled **L**, **N**, and **G**.
5. Guide the AC power cord or wires through the left conduit hub on the bottom of the Beacon 110 housing.

CAUTION: *Do not route power and detector head wiring through the same conduit hub. The power wiring may disrupt the transmission of the detector head signal to the monitor.*

6. Connect the AC wires to the AC power terminal strip as shown in Figure 7 below.

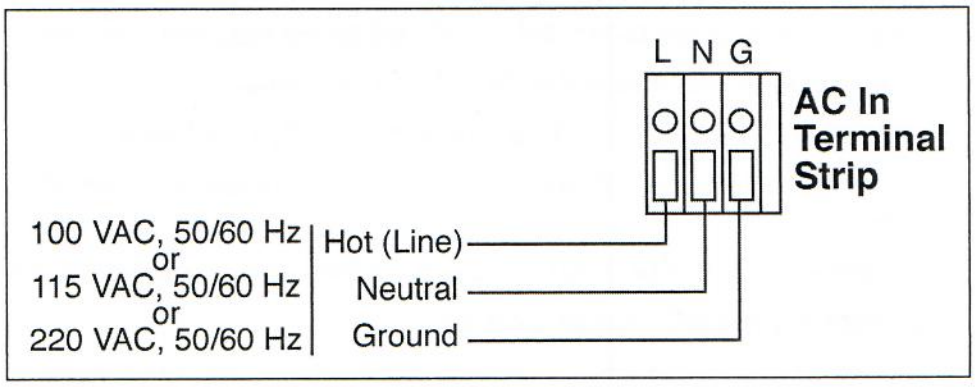

Figure 7: AC Power Wiring

Connecting the DC Power Source

WARNING: ***Verify that the power source is unplugged or turned off before you continue with this procedure.***

DC power may be used as a primary power source. If DC power (connected to the External DC In terminals) is the **primary** power source, **DO NOT** connect AC power to the AC In terminal strip.

A 24 VDC battery (connected to the External DC in terminals) may also be used as a backup power source if AC power (connected to the AC In terminal strip) is the primary power source. If your

Chapter 3: Installation & Startup

Overview

This chapter describes procedures to mount the Beacon 110 Gas Monitor, make wiring connections to the monitor, and start up the monitor.

WARNING: ***Perform all installation and start-up procedures in a "fresh air" environment (environment known to be free of combustible gas, toxic gas, and of normal oxygen content). The Beacon 110 is not in operation as a gas monitoring system until the start-up procedure is complete.***

Mounting the Beacon 110

Perform the following procedure to install the instrument housing at the mounting site.

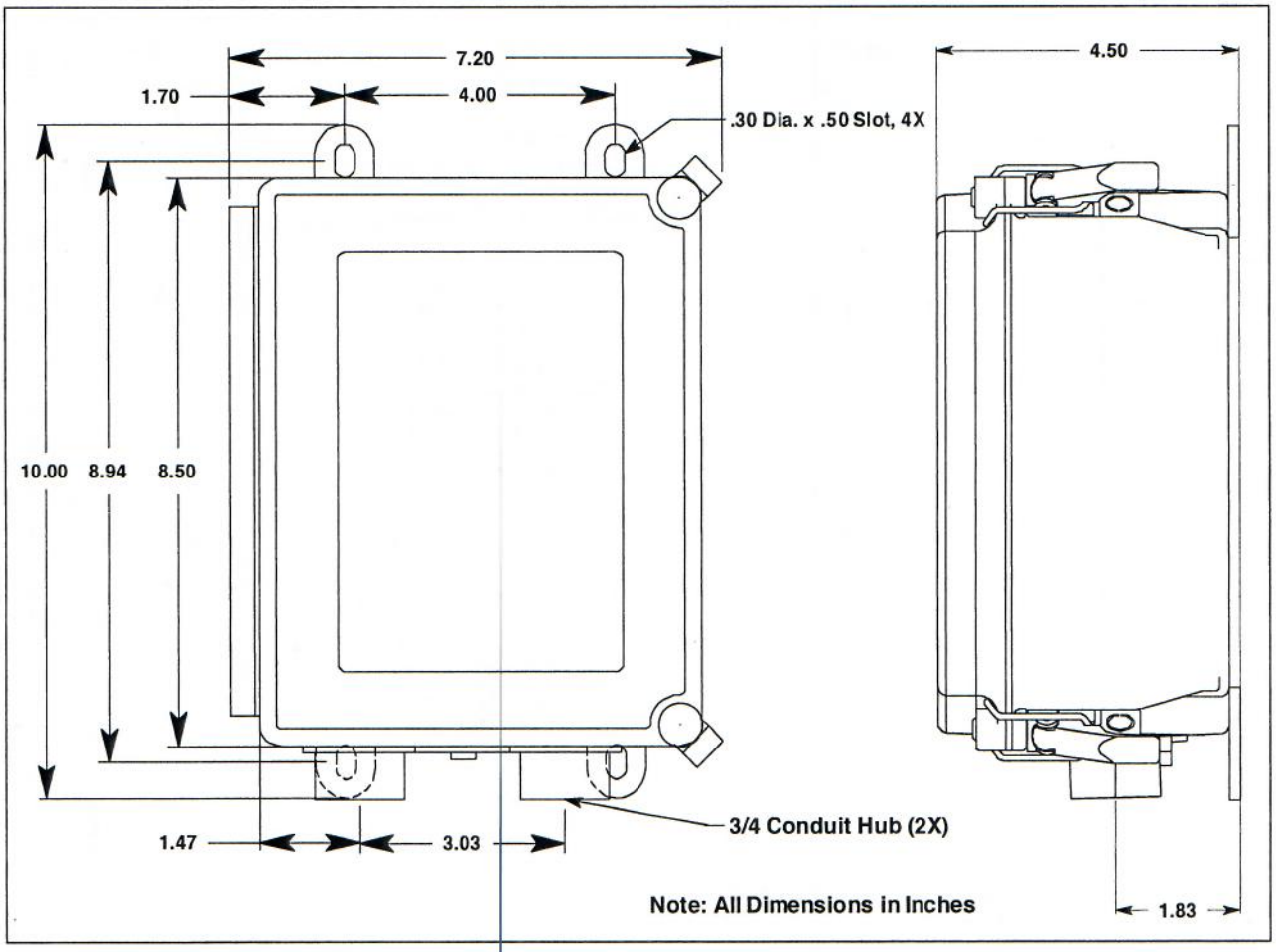

Figure 6: Beacon 110 Dimensions

Alarm Strobe

The Beacon 110 can be ordered with a red alarm strobe light installed on the top of the housing. The Beacon 110 retains its NEMA 4X rating with the strobe installed. Strobe operation can be programmed in Configuration Mode (see "Chapter 5: Configuration Mode" on page 31). The outline and mounting dimensions of the Beacon 110 with the optional alarm strobe mounted are the same as the standard Beacon 110 without the strobe. See Figure 6 for outline and mounting dimensions.

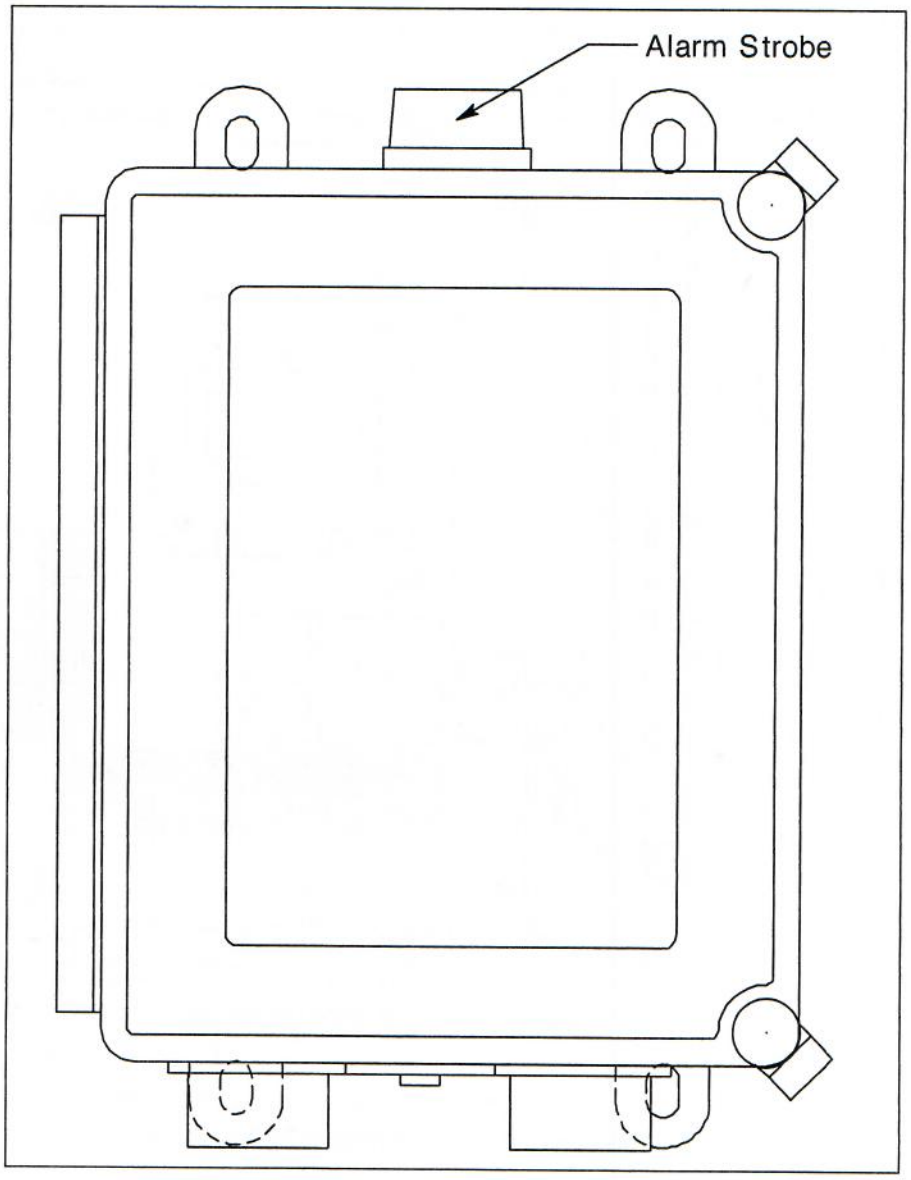

Figure 4: Beacon 110 with Alarm Strobe

Horn/Strobe

The Beacon 110 can be ordered with a horn/strobe. This optional horn/strobe allows the user to have both a strobe and a horn connected to the "Strobe" terminals of the Beacon 110. If the horn/strobe is not factory installed, it also allows the user to mount the horn/strobe away from the Beacon 110 so that it can be somewhere more visible/audible. Strobe operation can be programmed in Configuration Mode (see "Chapter 5: Configuration Mode" on page 31).

Table 4: Beacon 110 Control Button Functions

Switch	Function
DOWN/NO	• Cancels setting changes • Changes the displayed setting • Enters Input Mode (press with UP/YES button) • Displays the Information Screen
ENTER	• Initiates operations • Enters Configuration Mode (press with UP/YES button) • Accepts displayed parameters

Status LEDs

The Beacon 110 includes three active status LEDs that are located above the display (see Figure 1 on page 8). Two LEDs, labelled RX and TX, to the right of those described below, are not active.

- Fail LED

  The fail LED turns on when the Beacon 110 is experiencing a fail condition. A fail condition can be caused by a detector failure or low detector signal.

- Alarm 1 LED

  The alarm 1 LED is on when the Beacon 110 is experiencing an alarm 1 condition.

- Alarm 2 LED

  The alarm 2 LED is on when the Beacon 110 is experiencing an alarm 2 condition.

Ground Stud

The threaded ground stud is used for making connections to earth ground. It is connected through the main PCB to the **G** (ground) terminal on the AC in terminal strip. A kep nut on the stud may be removed for installation of one or more lugs to make wiring connections. This stud is typically used to connect the shield drain wire of shielded cable to earth ground at the Beacon 110.

Relays

The Beacon 110 includes three alarm relays located above the alarm terminal strip. They are from left to right Fail, Alarm 1, and Alarm 2. The relays are form C, single-pole, double-throw (SPDT) and rated for 10 amps at 115/220 VAC (resistive) or 10 amps at 30 VDC (resistive).

NOTE: You can select normally energized (N.EN) or normally de-energized (N.DE-EN) settings for the alarm 1 and alarm 2 relays. See "Chapter 5: Configuration Mode" on page 31.

The fail relay is factory set as normally energized and is not user adjustable.

AC & DC Circuit Protection

Two AC fuses are used in the Beacon 110. The two fuses are located on the left side of the main PCB, above the AC power terminal strip and below the power supply. They cut off the incoming AC power in the event of a short circuit or other electrical fault which causes a high current draw in the Beacon 110. They are housed in vertical fuse holders and are held in the holder by a quarter turn cover. They are labelled as F1 (left fuse) and F2 (right fuse) on the PCB silk-screen and are rated at 3 A, 250 V.

A polyswitch is used to protect the DC power input. It is located to the right of the relays and is labelled on the PCB silkscreen as PS3. In the event of a short circuit or other electrical fault which causes a high current draw in the Beacon 110, the polyswitch will interrupt the DC power if the unit is powered from DC. When the fault situation is corrected, the polyswitch resets and the unit will continue to operate. The polyswitch is not user serviceable.

Power Switch

The power switch is located to the right of the power supply and above the relays (see Figure 1 on page 8). The power switch turns the incoming AC power source on and off at the Beacon 110. When the switch is up, the power switch is on.

CAUTION: *The DC power input has no on/off switch and is not affected by the position of the power switch.*

Control PCB

The LCD display and control buttons are located on the control PCB. It is installed on the main PCB with three standoffs. The control PCB is connected to the main PCB with the display cable which is a ribbon cable terminated with 20 position rectangular connectors on each end. The display cable connects to the control PCB on the back of the top edge and to the main PCB directly below the control PCB.

Internal Description

This section describes the internal components of the Beacon 110.

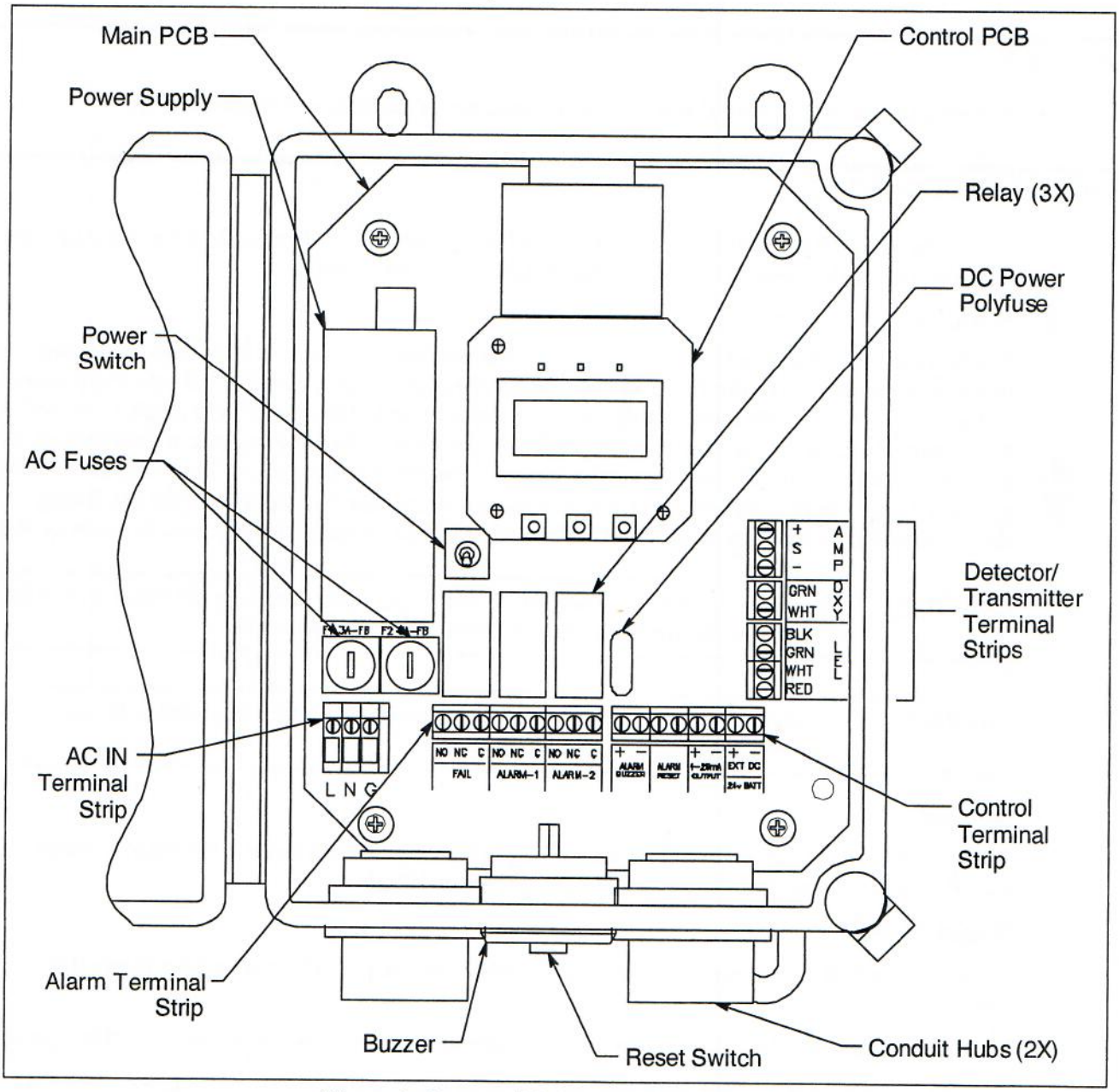

Figure 1: Beacon 110 Component Location

Main Printed Circuit Board (PCB)

The main PCB is mounted inside the housing. The main PCB includes the power supply, terminal strips, relays, fuses, and power switch.

Power Supply

The power supply is located on the left side of the main PCB. It takes AC line voltage supplied to the Beacon 110 and converts it to 24 VDC which is used to run the Beacon 110.

Specifications

Table 1 lists specifications for the Beacon 110.

Table 1: Beacon 110 Specifications

Input Power	100/115/220V ~ ±10%, 50/60Hz, 0.2/0.2/0.1A **or** 24 V ⎓ ± 10%, 0.5A
Construction (housing)	Fiberglass/polyester with lexan window (NEMA 4X)
Dimensions	8.5 in. H x 6.5 in. W x 4.5 in. D (216 mm H x 165 mm W x 108 mm D)
Weight	4.2 lbs.
Safety/Regulatory	C US 186718
Environmental Conditions	• For indoor or outdoor locations (Type 4X) • -20°C to 50°C (-4°F to 122°F) ambient • Maximum relative humidity of 80% • Main supply voltage fluctuations not exceeding ± 10% of nominal • DC supply voltage fluctuations not exceeding ±10% of nominal • Overvoltage Category II, Pollution Degree 2
Relays	• Relay contacts rated for 10A @ 115/220V~ resistive or 10A @ 30V ⎓ resistive • SPDT Form C
User Controls	• Three push button control switches • One ON/OFF toggle switch • One push button reset switch
Signal Output	• 4 to 20 mA, 500 ohms impedance max

Chapter 6: Input Mode **34**

Overview 34

Selecting the Detector Head Input and Gas Type 34

Chapter 7: Maintenance **38**

Overview. 38

Calibration Frequency. 38

Calibration Mode 38

Replacing the Fuses 43

Preventive Maintenance 43

Trouble Shooting. 44

Parts List 46

Appendix A: Control Button Quick Reference Guide. 47

Product Warranty

RKI Instruments, Inc., warrants gas alarm equipment sold by us to be free from defects in materials, workmanship, and performance for a period of one year from date of shipment from RKI Instruments, Inc. Any parts found defective within that period will be repaired or replaced, at our option, free of charge. This warranty does not apply to those items which by their nature are subject to deterioration or consumption in normal service, and which must be cleaned, repaired, or replaced on a routine basis. Examples of such items are:

a) Absorbent cartridges

b) Pump diaphragms and valves

c) Fuses

d) Batteries

e) Filter elements

Warranty is voided by abuse including mechanical damage, alteration, rough handling, or repair procedures not in accordance with the operator's manual. This warranty indicates the full extent of our liability, and we are not responsible for removal or replacement costs, local repair costs, transportation costs, or contingent expenses incurred without our prior approval.

THIS WARRANTY IS EXPRESSLY IN LIEU OF ANY AND ALL OTHER WARRANTIES AND REPRESENTATIONS, EXPRESSED OR IMPLIED, AND ALL OTHER OBLIGATIONS OR LIABILITIES ON THE PART OF RKI INSTRUMENTS, INC., INCLUDING BUT NOT LIMITED TO, THE WARRANTY OF MERCHANTABILITY OR FITNESS FOR A PARTICULAR PURPOSE. IN NO EVENT SHALL RKI INSTRUMENTS, INC., BE LIABLE FOR INDIRECT, INCIDENTAL, OR CONSEQUENTIAL LOSS OR DAMAGE OF ANY KIND CONNECTED WITH THE USE OF ITS PRODUCTS OR FAILURE OF ITS PRODUCTS TO FUNCTION OR OPERATE PROPERLY.

This warranty covers instruments and parts sold to users by authorized distributors, dealers, and representatives as appointed by RKI Instruments, Inc.

We do not assume indemnification for any accident or damage caused by the operation of this gas monitor, and our warranty is limited to the replacement of parts or our complete goods.