INSTRUMENTS

Beacon 110 Gas Monitor
Operator's Manual

Part Number: 71-0110RK

Revision: J

Released: 6/26/20

RKI Instruments, Inc.
www.rkiinstruments.com

Table of Contents

Chapter 1: Introduction 5
Overview 5
About the Beacon 110 5
About this Manual 5
Specifications 6
Chapter 2: Description 7
Overview 7
External Description 7
Internal Description 8
Optional Accessories. 13
Chapter 3: Installation & Startup 16
Overview 16
Mounting the Beacon 110 16
Wiring the Beacon 110 17
Start Up 23
Chapter 4: Operation 25
Overview 25
Normal Operation 25
4 - 20 mA Signal Output Operation 25
Viewing and Resetting Min/Max Readings 26
Battery Charging (Optional) 26
Alarm Indications 27
Chapter 5: Configuration Mode 31
Overview 31
Viewing & Changing Beacon 110 Parameters 31

Chapter 1: Introduction

Overview

This chapter briefly describes the Beacon 110 Gas Monitor. This chapter also describes the *Beacon 110 Operator's Manual* (this document). Table 1 at the end of this chapter lists the specifications for the Beacon 110.

About the Beacon 110

The Beacon 110 is a fixed mount, single channel continuous-monitoring gas monitoring controller. All user adjustable parameters may be accessed using push button switches. Both direct connect (internal amplifier type) detector heads and 4 - 20 mA transmitter (remote amplifier type) detector heads may be used with the Beacon 110.

The Beacon 110 displays the current gas reading on an LCD display which is visible through a window in the door. It includes audible and visual alarms that warn you of hazardous gas conditions. The alarm circuit includes two levels of gas alarms. The fail circuit alerts you to failures in the gas detector heads or Beacon 110. The Beacon 110 provides a 4 - 20 mA signal proportional to the target gas reading for use by a recording device. Three sets of relay contacts, two controlled by the gas alarms and one by the fail alarm, rated at 10 amps 115 VAC, 10 amps 220 VAC, and 10 amps 30 VDC are available for controlling devices such as lights or horns or for controlling higher rated relays.

Three operating modes allow you to display and change setup and calibration settings and change the detector head input type. They are Calibration Mode, Configuration Mode, and Input Mode.

About this Manual

The *Beacon 110 Operator's Manual* uses the following conventions for notes, cautions, and warnings.

NOTE: Describes additional or critical information.

CAUTION: *Describes potential damage to equipment.*

WARNING: ***Describes potential danger that can result in injury or death.***

Chapter 2: Description

Overview

This chapter describes external and internal components of the Beacon 110 gas monitor.

External Description

This section describes the housing and all external components of the Beacon 110. For the purposes of this description, the housing door is considered the front of the monitor.

Housing

The Beacon 110's fiberglass housing is weather- and corrosion-resistant. It is suitable for installation where general purpose equipment is in use. The housing door is hinged on the left side and is secured by two latches on the right side. The display screen and status lights are visible through a window in the housing door. Four mounting feet are attached to the back of the housing (one at each corner). The mounting feet allow installation to a vertical surface. Two conduit hubs on the bottom of the housing are for external wiring connections. In some cases, the instrument is shipped with the gas detector already installed in the right conduit hub and factory wired to the appropriate terminals inside the unit.

CAUTION: *Only use the two factory installed conduit hubs on the bottom of the housing for wire entry into the housing. Do not drill the housing for any reason.*

CAUTION: *To avoid electrical interference, do not route detector and power wiring through the same conduit hub.*

Buzzer

The buzzer is on the bottom center of the housing in front of the reset switch. The buzzer sounds audible alarms to warn you of gas alarms and instrument failures.

Reset Switch

The reset switch is on the bottom of the housing behind the buzzer. The reset switch serves three functions:

- You can reset the alarm circuits for "latched" alarms after an alarm 1 or alarm 2 condition passes.
- You can silence the buzzer during an alarm 1 or an alarm 2 condition. You cannot silence a fail condition.
- You can acknowledge and turn off the optional strobe in an alarm 1 or alarm 2 condition if it has been installed and setup for this type of operation.
- You can display and reset the minimum and maximum readings that the Beacon 110 has experienced since the last min/max reset or startup.

Terminal Strips

The Beacon 110 includes terminal strips for external and factory wiring connections. See "Wiring the Beacon 110" on page 17 for detailed wiring procedures.

- **AC In Terminal Strip.** The AC in terminal strip is a 3-point terminal strip located in the lower left corner of the main PCB. It facilitates wiring from the AC power source. Table 2 lists the function of each terminal.

Table 2: Terminal Assignments for the AC In Terminal Strip

Terminal	Connects to:
L	Hot (line) wire from AC power source.
N	Neutral wire from AC power source.
G	Earth ground

- **Alarm Terminal Strip**. The 9-point alarm terminal strip is located along the bottom edge of the main circuit board to the right of the AC in terminal strip (see Figure 1). It facilitates wiring external alarm devices (horn, strobe, etc.) to the alarm relay contacts and includes common (C), normally closed (NC) and normally open (NO) terminals for fail, alarm 1, and alarm 2.
- **Controller Terminal Strip.** The 8-point controller terminal strip is located along the bottom edge of the main circuit board to the right of the alarm terminal strip (see Figure 1). The controller terminal strip facilitates various internal and external wiring connections. Table 3 lists the function of each terminal.

Table 3: Terminal Assignments for the Controller Terminal Strip

Terminal	Connects to:
Alarm Buzzer + & -	Factory installed buzzer (factory-wired)
Alarm Reset (2)	Reset switch (factory-wired)
4 - 20 mA Output +	+ connection of 4 - 20 mA output
4 - 20 mA Output -	- connection of 4 - 20 mA output
EXT DC (24V BATT) +	+ connection from 24 VDC power source[1] (or 24 V backup battery)
EXT DC (24V BATT) -	- connection from 24 VDC power source[1] (or 24 V backup battery)

* [1] ***If DC power is used as the primary power source, do not make wiring connections to the AC terminal strip.***

- **Detector/Transmitter Terminal Strips.** Three adjacent terminal strips are located along the right side of the main circuit board above the controller terminal strip (see Figure 1). These three terminal strips facilitate wiring connections to a detector or a 4 - 20 mA transmitter. The lower 4-point terminal strip is labelled **LEL** and is used to wire a combustible detector. The middle 2-point terminal strip is labelled **Oxy** and is used to wire an oxygen detector. The top 3-point terminal strip is labelled **AMP** and is used to wire 4 - 20 mA transmitters or direct connect preamp type detectors. Although terminal strips are present for various types of detectors, only one detector head at a time may be wired to the Beacon 110.

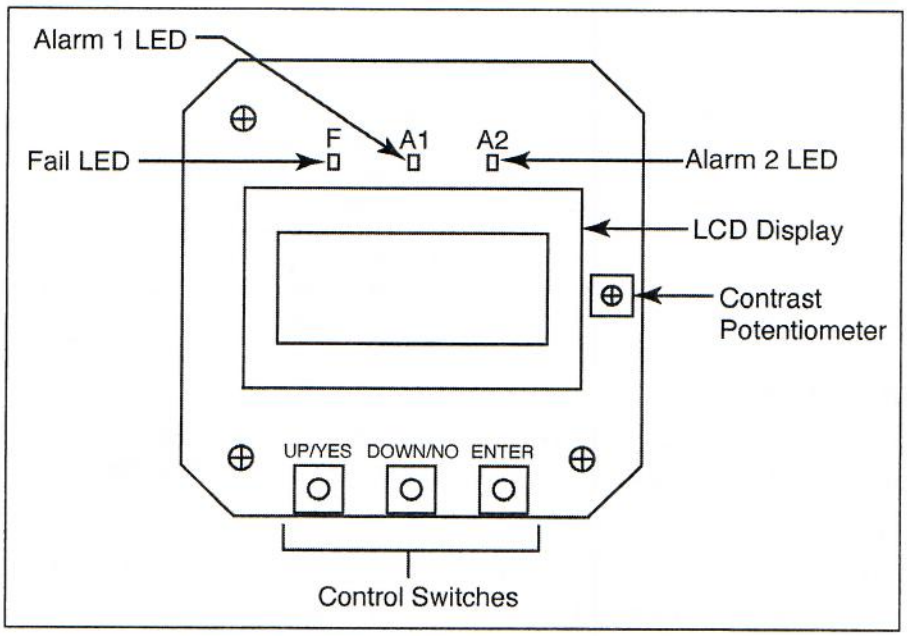

Figure 2: Control PCB Component Location

LCD Display

The LCD display is located at the top of the control PCB. It indicates the current gas reading and displays messages and parameters in the Beacon 110's operating modes.

Contrast Potentiometer

The contrast potentiometer is located to the right of the LCD display. It is used to adjust the contrast of the LCD. If the background of the LCD appears so dark that the characters are not visible or if the characters are too dim, turn the adjustment screw on the potentiometer clockwise or counterclockwise until the desired visibility is obtained.

Control Buttons

The Beacon 110 includes three push button switches that allow you to enter the Beacon 110's operating modes, navigate through the modes, update settings, and save changes to the settings. The push button switches are located along the bottom edge of the control PCB (see Figure 2). The UP/YES button is on the left, the DOWN/NO button is in the middle, and the ENTER button is on the right.

Table 4: Beacon 110 Control Button Functions

Switch	Function
UP/YES	• Saves settings • Changes the displayed setting • Enters Calibration Mode • Enters Input Mode (press with DOWN/NO button) • Enters Configuration Mode (press with ENTER button)

Optional Accessories

This section describes the optional accessories available for the Beacon 110. Both optional accessories are wired to the Strobe Terminal Strip as shown below.

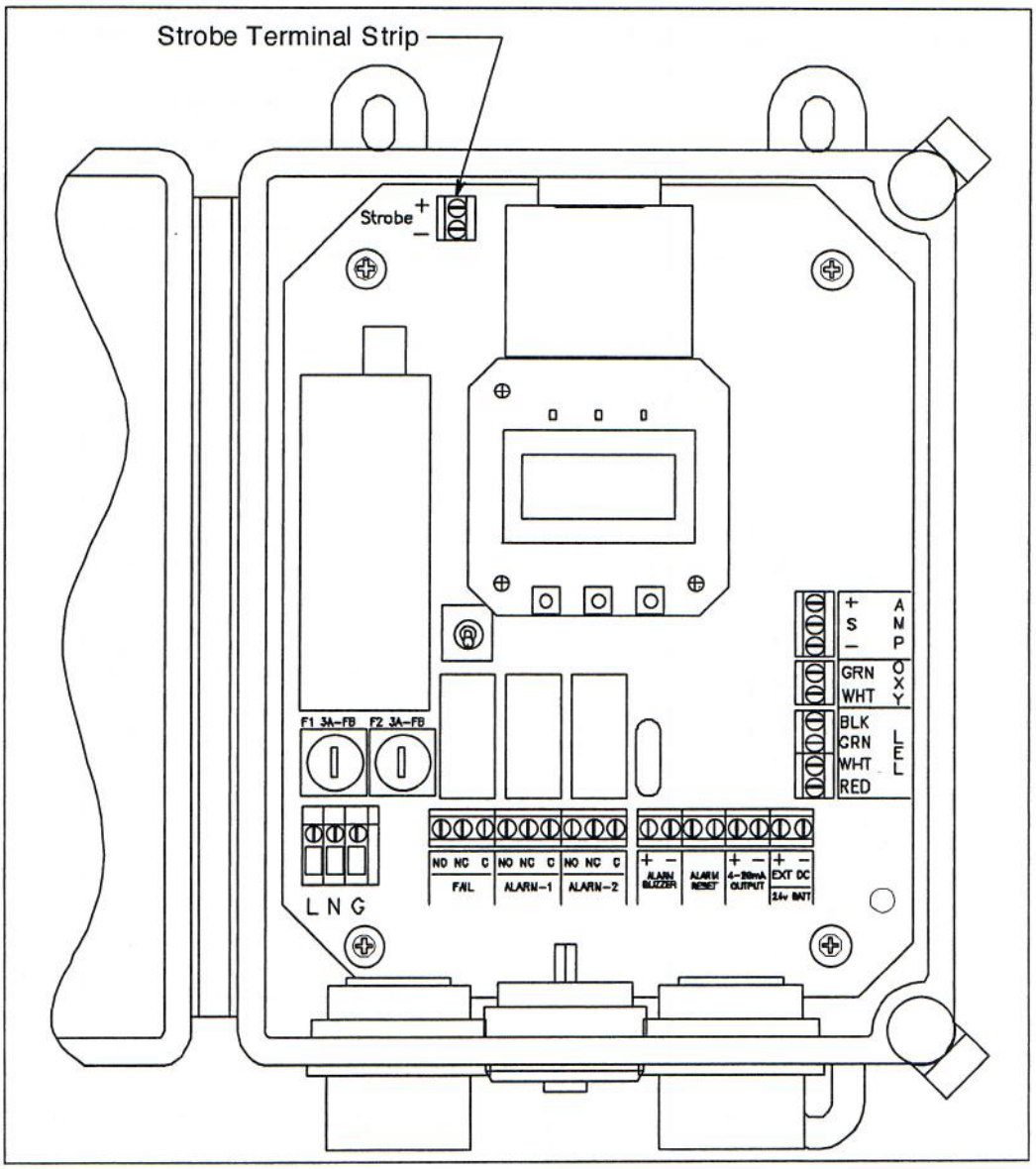

Figure 3: Strobe Terminal Strip Location

NOTE: See "Chapter 3: Installation & Startup" on page 16 for complete Beacon 110 installation instructions.

CAUTION: Do not adjust the strobe brightness or the horn volume at the strobe/horn, as this may overload the Beacon 110 strobe control circuit.

The optional horn/strobe is generally not factory installed and needs to be installed by the user. The following instructions describe the installation of the horn/strobe. If the horn/strobe is factory installed, the following instructions do not apply.

1. Mount the horn/strobe in the desired location.
2. Install an appropriately rated cable bushing or conduit to the left conduit hub on the bottom of the Beacon 110 housing.
3. Install an appropriately rated cable bushing or conduit at the horn/strobe.
4. Run a cable or wires in conduit from the horn/strobe to the Beacon 110 through the left conduit hub.
5. Connect the wires to the strobe terminal strip as shown in the figure below.

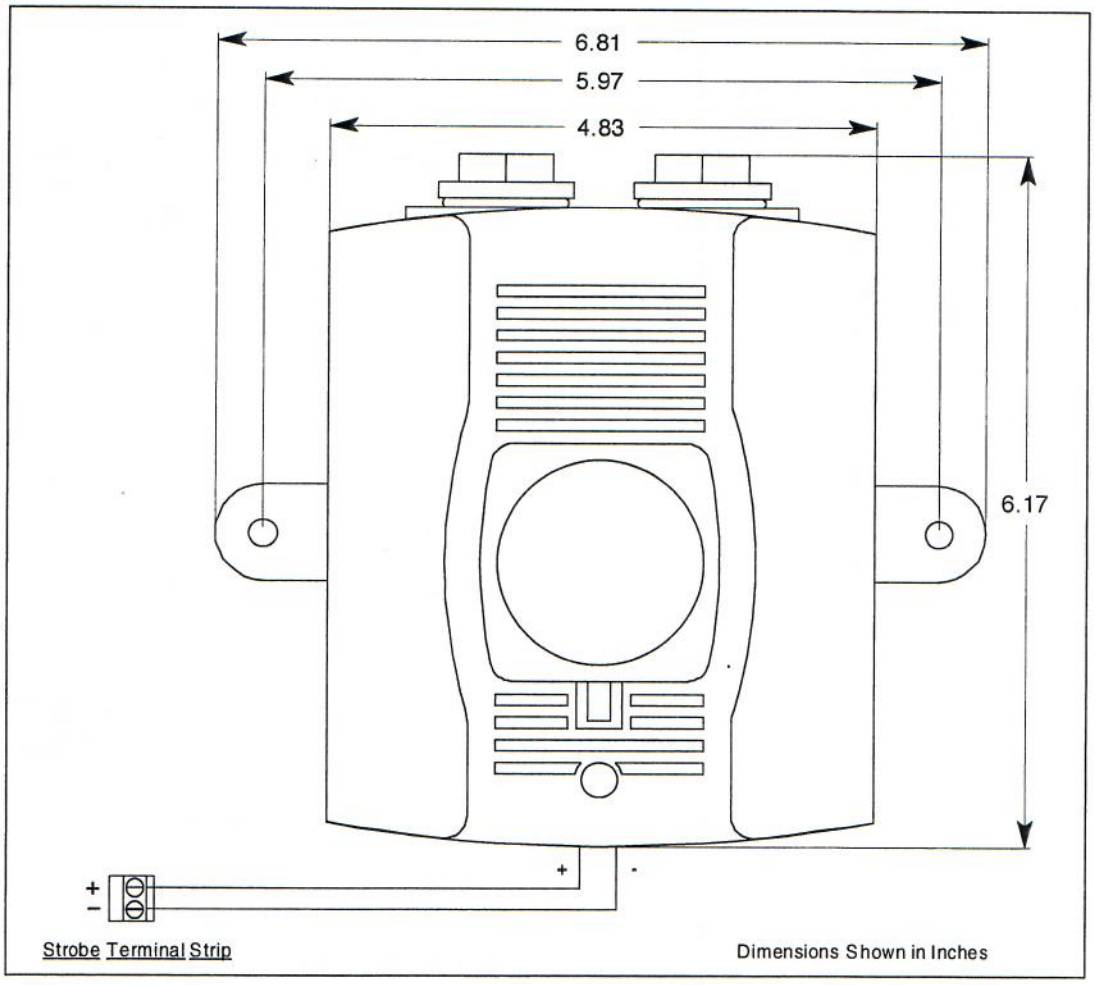

Figure 5: Horn/Strobe Wiring and Dimensions

1. Select the mounting site. When you select the mounting site consider the following factors:
   - Is an AC or DC power source available?
   - Is there enough room to open the housing door and make wiring connections through the conduit hubs at the bottom of the housing?
   - Are the display screen and status lights visible?
2. If necessary, close and latch the housing door.
3. Position the monitor on a vertical surface at eye level (4 1/2 to 5 feet from the floor).
4. Insert 1/4 in. or 5/16 in. screws through the slots in the mounting feet at each corner of the housing to secure the housing to the mounting surface.

Wiring the Beacon 110

This section describes procedures to connect the AC power source, DC power source, external alarm(s), recorder, and detector head.

WARNING: ***Make all connections to the Beacon 110 before you plug in or turn on the AC or DC power source. Before you make any wiring adjustments, always verify that all power sources are not live.***

Routing Wiring Into the Beacon 110 Housing

Wiring must be brought into the housing through one of the two factory-installed conduit hubs on the bottom of the housing.

Do not drill into the Beacon 110 housing for any reason. Drilling the Beacon 110 housing and routing wiring through holes not factory drilled will void the warranty and could result in:

- Damage to internal components from the drilling process.
- Moisture damage to internal components from poorly sealed holes.
- Unpredictable Beacon 110 behavior due to EMI/RFI interference caused by wires routed across the PCBs.
- Possible shorting of Beacon 110 components due to wires routed across the PCBs.

Connecting the AC Power Source

NOTE: If you are using DC power as the primary power source, go to the next section, "Connecting the DC Power Source".

The AC in terminal strip will accept 24 - 14 AWG wire. All connections to building electrical systems must be installed in accordance with local requirements and must be installed by qualified personnel. If this equipment is used in a manner not specified by the manufacturer, the protection provided by the equipment may be impaired. Install an appropriate switch or circuit breaker in the AC line close to the Beacon 110 that meets the local electrical code and within easy reach of the operator. The switch or circuit breaker must be marked as the disconnecting device for the Beacon 110.

Perform the following procedure to connect the AC power source to the Beacon 110.

Beacon 110 does not include the battery charging feature, you may use a self contained 24 VDC backup that keeps its batteries charged while AC power is on and recharges the batteries when AC power returns after a power failure. If your Beacon 110 includes the battery charging feature, see "Battery Charging (Optional)" on page 26 for a complete description of this feature and what type of battery to use.

WARNING: ***The External DC In terminals on the controller terminal strip are only intended for connecting a battery or a 24 VDC supply to the Beacon 110. Do not connect any horns or strobes to the External DC In terminals on the controller terminal strip.***

---

1. Turn off or unplug all incoming power to the Beacon 110.
2. Open the housing door, then place the power switch in the OFF position.

CAUTION: *The power switch does not control DC input power.*

---

3. Locate the DC power terminals on the controller terminal strip in the lower right corner of the main PCB (see Figure 1 on page 8). They are labelled EXT DC + and EXT DC -.
4. Install an appropriately rated cable bushing or conduit to the left conduit hub on the bottom of the Beacon 110 housing.

CAUTION: *Only use the two factory installed conduit hubs on the bottom of the housing for wire entry into the housing. Do not drill the housing for any reason. See "Routing Wiring Into the Beacon 110 Housing" on page 17 for more information.*

---

5. Guide a DC power cord or wires through the conduit hub.

CAUTION: *Do not route power and detector head wiring through the same conduit hub. The power wiring may disrupt the transmission of the detector head signal to the monitor.*

---

6. Connect the DC wires to the controller terminal strip as shown in Figure 8.

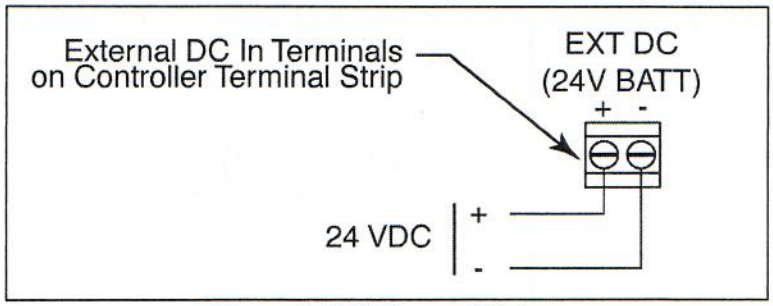

Figure 8: DC Power Wiring

NOTE: The Beacon 110 will operate from the DC input down to 18.5 volts. If a self contained backup battery is used, see its operator's manual for a description of its recharging characteristics. If your Beacon 110 includes the battery charging feature and a backup battery is used, the Beacon 110 will recharge the battery when AC power has returned after a power failure. See "Battery Charging (Optional)" on page 26 for a complete description of the battery charging feature.

Connecting Recorders

Perform the following procedure to connect an analog signal recording device to the Beacon 110. The output at the recorder output terminals is a 4 - 20 mA signal that is proportional to the detection range of the detector head connected to the Beacon 110.

1. Turn off or unplug incoming power to the Beacon 110.
2. Open the housing door, and locate the recorder output terminals on the controller terminal strip. See Figure 1 on page 8. They are labelled **4 - 20 mA OUTPUT +** and **4 - 20 mA OUTPUT -**.
3. Place the power switch in the off position.

CAUTION: *The power switch does not control DC input power.*

---

4. Install an appropriately rated cable bushing or conduit in the left conduit hub on the bottom of the Beacon 110 housing. This hub is typically used for power wiring and may already have conduit or other fittings installed because of this.

CAUTION: *Only use the two factory installed conduit hubs on the bottom of the housing for wire entry into the housing. Do not drill the housing for any reason. See "Routing Wiring Into the Beacon 110 Housing" on page 17 for more information.*

---

5. Guide the wiring from the recording device through the left conduit hub on the bottom of the Beacon 110 housing.
6. Connect the leads from the recording device to the analog output terminal strip as shown in Figure 10 below.

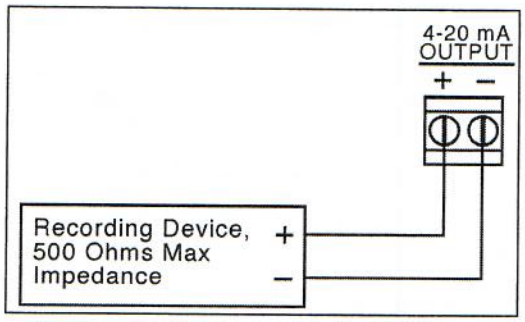

Figure 10: Recorder Output Wiring

Connecting RKI Detector Heads

Perform the following procedure to connect an RKI detector head to the Beacon 110.

1. Turn off or unplug power to the Beacon 110.
2. Open the Beacon 110 door and place the power switch in the off position.
3. See the detector head operator's manual for instructions on how to connect the detector head to a controller.
4. Install an appropriately rated cable bushing or conduit in the right conduit hub on the bottom of the Beacon 110 housing.

3. See the transmitter's instruction manual for instructions on how to connect wires to the transmitter.
4. Install an appropriately rated cable bushing or conduit in the right conduit hub on the bottom of the Beacon 110 housing.

CAUTION: *Only use the two factory installed conduit hubs on the bottom of the housing for wire entry into the housing. Do not drill the housing for any reason. See "Routing Wiring Into the Beacon 110 Housing" on page 17 for more information.*

---

5. Route the wires from the transmitter through the right conduit hub into the Beacon 110.
6. Connect the wires from the transmitter to the AMP terminal strip. Figure 11 below illustrates typical transmitter wiring connections. See the transmitter instruction manual for controller terminal connections. If shielded cable is used, connect the cable shield's drain wire at the Beacon 110 to the ground stud on the main PCB.

CAUTION: *Do not route power and transmitter wiring through the same conduit hub. The power wiring may disrupt the transmission of the transmitter's signal to the Beacon 110.*

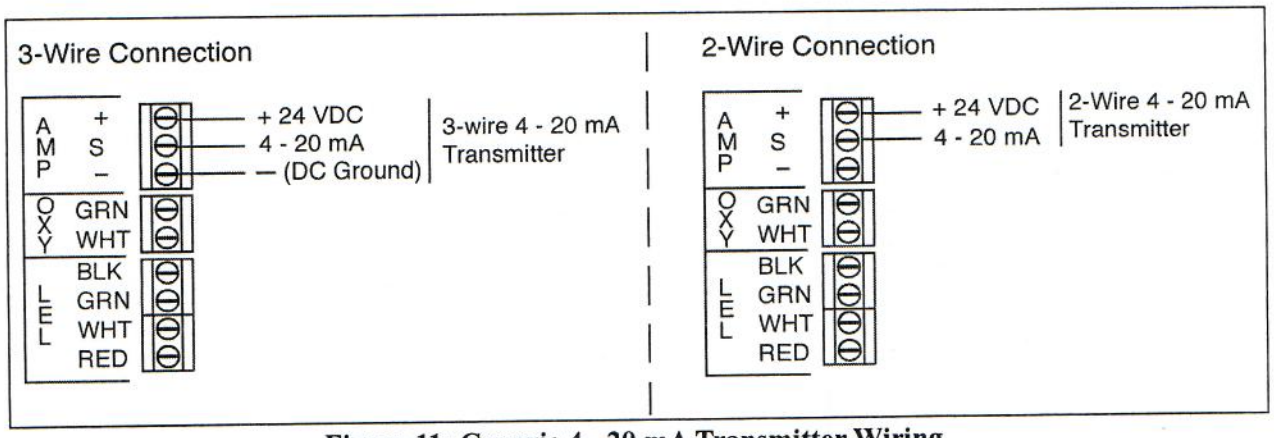

Figure 11: Generic 4 - 20 mA Transmitter Wiring

Start Up

Introducing Incoming Power

Perform the following procedure to place the Beacon 110 into normal operation.

1. Complete the mounting and wiring procedures described earlier in this chapter.
2. Complete all installation procedures described in the detector head or user supplied 4 - 20 mA transmitter operator's manual.
3. Verify that all wiring connections are correct and secure and that the Beacon 110's power switch is in the OFF position.
4. Plug in or turn on the incoming power source (AC or DC).
5. Turn on the power switch if AC power is used as primary power.

Chapter 4: Operation

Overview

This chapter describes the Beacon 110 in normal operation. This chapter also describes the Beacon 110 in alarm 1, alarm 2, and fail conditions and suggests response to these conditions.

Normal Operation

Normal operation is defined as follows:

- The start-up procedure is complete.
- The Beacon 110 is not indicating an alarm 1, alarm 2, or fail condition.
- The Beacon 110 is not in Calibration, Configuration, or Input Mode.

During normal operation, the Beacon 110 simultaneously displays the current gas reading, unit of measure, and target gas. The example below illustrates a typical LEL Beacon 110.

METHANE 0 %LEL

4 - 20 mA Signal Output Operation

The output at the 4 - 20 mA output terminals is a 4 - 20 mA signal that is proportional to the detection range of the Beacon 110. During normal operation, this signal tracks the gas concentration on the LCD.

There are several circumstances where the signal output will not track the display reading but will behave as follows:

- When the Beacon 110 is in its warm-up period, the signal output will be fixed at 4 mA (zero) for all gas types except oxygen. For oxygen types, the output will be fixed at 17.4 mA (20.9% oxygen) while the Beacon 110 is in warm-up.
- When the Beacon 110's gas type is changed, the Beacon 110 will enter Configuration Mode for you to verify the parameter settings. When you exit Configuration Mode, the display will indicate **NEEDS CALIBRATION** and will continue to indicate this until Calibration Mode is entered and a calibration is performed. In this situation, the signal output will be fixed at 3.5 mA for all versions other than oxygen and 17.4 mA for oxygen versions from the time Gas Type Mode is entered until the Beacon 110 is calibrated and returns to normal operation.
- If you enter Calibration Mode, Configuration Mode, or Gas Type Mode, the signal output will be fixed at 3.5 mA for all versions other than oxygen and 17.4 mA for oxygen versions until the Beacon 110 returns to normal operation.
- If the Beacon 110's input power decreases below 18.5 volts so that the Beacon 110 is in a low power alarm, the signal output is fixed below 2.4 mA until the low power alarm is cleared.

Alarm Indications

NOTE: The Beacon 110 includes alarm on and alarm off delay settings for alarm 1 and alarm 2. The alarm indications described in this section operate according to the factory set alarm settings. See Table 7 on page 32 for all the factory settings.

Table 6: Visual and Audible Alarm Indications

Condition	Cause	Visual Indication(s)	Audible Indication
Alarm 1[1]	Increasing (decreasing for O_2) gas reading at or above the alarm 1 setpoint	• Alarm 1 LED is on • Gas reading alternates with **ALARM-1** message • If installed and set to activate for alarm 1, strobe flashes	• Pulsing tone
Alarm 2[1]	Increasing gas reading at or above the alarm 2 setpoint	• Alarm 2 LED is on • Gas reading alternates with **ALARM-2** message • If installed and set to activate for alarm 2, strobe flashes	• Pulsing tone
Fail	• Disconnected or misconnected detector head wiring • Display reading at -10% of full scale or lower • Defective components	• Fail LED is on • **FAIL** message replaces gas reading • If installed, strobe flashes *NOTE: There is a 30 second delay on the fail indications.*	• Steady tone
Low Power	DC power source less than 18.5 volts.	• Fail LED is on • **LowPower** message and actual voltage of incoming DC power	• None

* [1]*If the Beacon 110 is in both an alarm 1 and an alarm 2 condition, both alarm LEDs are on and the display alternates between the gas reading and the ALMS 1&2 message.*

NOTE: You can select normally energized (N. EN) or normally de-energized (N. DE-EN) alarm 1 and alarm 2 relay settings in Configuration Mode. The following sections describe the standard factory setting for these relays which is N. DE-EN.

The fail relay is set as normally energized in the firmware and is not user-adjustable.

Responding to an Alarm 2 Condition

1. Follow your established procedure for a high level combustible or toxic gas condition or an increasing oxygen concentration condition.
2. Oxygen alarms are factory set as self-resetting and will automatically clear when the oxygen reading rises above the alarm 2 setpoint.
3. Alarms for all other gas types are factory set as latching. After the gas reading falls below the alarm 2 setpoint, press the reset switch to reset the alarm circuit. Resetting the alarm circuit silences the buzzer, turns off the Alarm 2 LED, returns the LCD to the normal operation screen, de-energizes the alarm 2 relay, and turns off the strobe if it is installed and set to operate for alarm 2.

NOTE: If the reset switch is pressed while the Beacon 110 is in an alarm 2 condition, the buzzer will be silenced and the alarm 2 LED will flash but all other indications will remain unchanged. If the strobe is installed and its alarm 2 operation is set to **CanReset** in Configuration Mode, the strobe will turn off.

You cannot de-energize the alarm 2 relay until the gas reading falls below the alarm 2 setpoint.

Fail Condition

Fail Condition Indications

The Beacon 110 indicates a fail condition for any of the following:

- The detector head wiring is disconnected or incorrectly connected.
- The display reading is -10% of full scale or lower.

When the Beacon 110 senses a fail condition, it alerts you as follows:

- The fail LED turns on.
- The gas reading is replaced by the **FAIL** message.
- The buzzer sounds a steady tone.
- The fail relay de-energizes.
- If installed, the strobe flashes.

NOTE: The fail alarm has a 30 second delay.

Responding to a Fail Condition

NOTE: A fail condition cannot be reset using the reset switch.

---

1. Verify that the detector head wiring is correctly and securely connected.
2. If the detector head includes a replaceable plug-in sensor, verify that the replaceable plug-in sensor is properly installed.
3. If necessary set the zero reading for your detector head as described in "Calibration Mode" on page 38.

Chapter 5: Configuration Mode

Overview

This chapter describes how to view and change Beacon 110 parameters using Configuration Mode. It is accessed using the program buttons.

Configuration Mode includes a 5-minute time-out feature. If you do not press a control button for 5 minutes, the Beacon 110 automatically returns to normal operation.

NOTE: If the Beacon 110 returns to normal operation because of a time-out, it enters a warm-up period just as it does when it is first turned on.

If you are installing a new Beacon 110, it has been set up at the factory. Use Configuration Mode only if you want to change the Beacon 110's setup. If you want to change the detector type see "Chapter 6: Input Mode" on page 34.

Viewing & Changing Beacon 110 Parameters

1. While in normal operation, simultaneously press and hold the UP/YES and ENTER buttons for 5 seconds to enter Configuration Mode. Release the buttons when the following screen appears.

Enter Config?

2. If you want to exit Configuration Mode, press and release the DOWN/NO button and the Beacon 110 will return to normal operation.

   If you want to continue in Configuration Mode, press and release the UP/YES button. The target gas and the full scale will be displayed for a few seconds before the first adjustable parameter, the alarm 1 setpoint, is displayed.

3. If you want to change the currently displayed parameter, use the UP/YES and DOWN/NO buttons to adjust it to the desired setting, then press ENTER to continue to the next parameter.

   If the currently displayed parameter is OK, press the ENTER button to proceed to the next parameter.

   Table 7 lists the Beacon 110 parameters you can set. Table 7 also lists the factory set value for each parameter.

Table 7: Configuration Parameters (Continued)

Parameter (Factory Set Value)	Description
A2Strobe (None if no strobe is installed, Non Reset if a strobe is installed)	If set as **None**, there is no strobe operation. If set as **NonReset**, it is not possible to turn off the strobe with the reset switch while the Beacon 110 is in an alarm 2 condition. If set as **CanReset**, the strobe can be turned off while the Beacon 110 is in an alarm 2 condition by pressing the reset switch.
A2 OnDy (alarm 2 on delay) (2 min for oxygen, 1 secs for all other channel types)	The amount of time the Beacon 110 delays activation of the alarm 2 circuit once an alarm 2 condition is initiated.
A2 OffDy (alarm 2 off delay) (0 sec.)	The amount of time the Beacon 110 delays turning off the alarm 2 circuit once an alarm 2 condition passes. This parameter appears only if the alarm 2 relay reset setting is set to **SELF-RST**.
ZeroSupp (0.0% of the **detection range** in terms of the detection units for carbon dioxide channel types, 0.5% **oxygen** for oxygen channel type, 2.0% of the **detection range** in terms of the detection units for all other channel types)	The zero suppression feature helps prevent "jumpy" readings near the fresh air reading. For example, if the zero suppression setting for a combustible detector is **2.0% LEL,** the Beacon 110 will display a reading of 0% LEL for gas readings from -2% LEL to 2% LEL.
FILTER (5 secs)	The filter feature helps "smooth out" jumpy or noisy signals from the detector. You can set the filter from 0 seconds to 60 seconds in 5 seconds increments. The displayed gas reading is the average reading over the previous time period defined by the filter setting. So if the filter is set to 5 seconds, the displayed gas reading is the average over the past 5 seconds.
CAL Time (15 mins)	The calibration time-out sets the amount of time after the last button push while in Calibration Mode that the Beacon 110 will wait before returning to normal operation. If the calibration time-out is set to **15 mins**, then Beacon 110 will return to normal operation automatically 15 minutes after the last button push.

4. When you have scrolled through all the adjustable parameters, **SAVE IT? YES/NO** appears on the display.
5. To save the adjustments made, press and release the UP/YES button. **Config Saved** is indicated on the display for a few seconds and the Beacon 110 returns to normal operation.

   If you do not wish to save the adjustments, press and release the DOWN/NO button. The **DO OVER? YES/NO** message will display. Press and release the DOWN/NO button. The **ABORT? YES/NO** message will display.Press the UP/YES button to return to normal operation.

Table 8: Beacon 110 Detector Head Input Types

Detector Head Input Type	Description
OXY DIR	An **OXY DIR** detector head is an oxygen detector head in which the oxygen detector is wired to the Beacon 110 with 2 wires using the OXY GRN and WHT terminals from the detector/transmitter terminal strips. All calibration adjustments are made at the Beacon 110.
TOX DIR	A **TOX DIR** detector head is connected to the Beacon 110 with 2 wires using the AMP + and S terminals from the detector/transmitter terminal strips. All calibration adjustments are made at the Beacon 110.
LEL DIR	An **LEL DIR** detector head is a combustible gas detector head in which the combustible gas detector is wired to the Beacon 110 with 4 wires using the LEL BLK, GRN, WHT, and RED terminals from the detector/transmitter terminal strips. All calibration adjustments are made at the Beacon 110.
4 - 20 mA	A **4 - 20 mA** detector head is connected to the Beacon 110 with 2 or 3 wires, depending on the detector head model, using the AMP +, S, and - terminals on the detector head terminal strip. All calibration adjustments are made at the detector head.

4. When the desired detector head input type is on the display, press and release the UP/YES button. The display will ask **SAVE IT? YES/NO**.
5. If you want to discard the detector head input type change, press and release the DOWN/NO button. The display will ask **DO OVER? YES/NO**. Press the DOWN/NO button. The display will ask **ABORT? YES/NO**. Press the UP/YES button. The display will indicate **Aborting INPUT** and then **NO CHANGE** before indicating **Select GasType?**.

NOTE: If your Beacon 110 is configured as direct connect oxygen and the detector head input type selection is aborted, the Beacon 110 will return to normal operation after indicating **NO CHANGE**.

If you want to save the input type selection, press and release the UP/YES button. The display will indicate **Input Updated** for a few seconds if you changed the input type and then the display will indicate **Gas Type?** on the top display line and the gas type choice on the bottom display line. If you did not change the input type from the current type, the display indicates **NO CHANGE** and then **Select GasType?**.

NOTE: If you selected OXY DIR, the Beacon 110 will enter Configuration Mode after pressing and releasing the UP/YES button since the gas type and full scale are pre-defined for a direct connect oxygen type input. Skip to step 10.

---

10. While in Configuration Mode press and release the ENTER button to accept the displayed parameter setting and move to the next one. Use the UP/YES and DOWN/NO buttons to adjust a setting. See "Chapter 5: Configuration Mode" on page 31 for a complete description of Configuration Mode.
11. When you have reviewed and accepted the last item in Configuration Mode by pressing the ENTER button, display will ask **SAVE IT? YES/NO**.
12. To save the configuration settings, press and release the UP/YES button.The display will indicate **Config Saved** and the Beacon 110 will begin its warm-up sequence.

    To discard the settings and review them again, press the DOWN/NO button. The display will ask **DO OVER? YES/NO**. Press the UP/YES button and the display will indicate **Re-do Config**, then display the target gas and the detection range for a few seconds before returning to Configuration Mode. Repeat steps 6 - 8 until the settings are as desired.
13. After the Beacon 110 completes its warm-up sequence, the display will indicate **CAL NEEDED**, the buzzer will sound a steady tone, the strobe (if installed) will flash, the fail relay will activate, and the fail LED will turn on. Since the input type and/or gas type has been changed, a successful calibration must be performed before the Beacon 110 can enter normal operation.

NOTE: If the input type was set as 4 - 20 mA, the Beacon 110 will enter normal operation since calibration is done at the detector for a 4 - 20 mA type input.

---

14. Press and release the UP/YES button to enter Calibration Mode. Normally, you must hold the UP/YES button for 5 seconds to enter Calibration Mode, but since a calibration is required, only a momentary push is needed to enter Calibration Mode after changing the gas type.
15. See "Calibration Mode" on page 38 for calibration instructions.

NOTE: When calibrating a Beacon 110 after changing the gas type, the Beacon 110 will not ask if you want to calibrate, or whether you want to perform a fresh air adjustment, span adjustment or zero adjustment. Since a complete calibration is required, the calibration sequence will proceed without asking if you want to perform certain operations.

Calibration Gas Response Memory Feature

When a direct connect detector head is installed, the Beacon 110 has the capability to "remember" the detector's response to the calibration gas after the gas is removed from the detector during the fresh air or span (zero for an oxygen detector) adjustment procedure. This feature enables one person to perform calibration if the detector is mounted remotely from the Beacon 110. When zero air is applied to the Beacon 110 during a fresh air adjustment, the Beacon 110 will freeze the display reading at the lowest (highest for an oxygen detector) response and the Beacon 110 will continue to display this reading and retain it in its memory until the fresh air adjustment procedure is completed. When calibration gas is applied to the Beacon 110 during a span (zero for an oxygen detector) adjustment, the Beacon 110 will freeze the display reading at the highest (lowest for an oxygen detector) response to the calibration gas. The calibration gas can then be removed and the Beacon 110 will continue to display this reading and retain it in its memory until the span (zero for an oxygen detector) adjustment procedure is completed.

Calibration Program Flow

Figure 12 and Figure 13 below illustrate the general flow of the Calibration Program for the two detector head types. See the next section, "Entering Calibration Mode", for instructions to enter Calibration Mode. In general, if a question mark, "?", is part of the display text, use the UP/YES or DOWN/NO button to respond. Use the UP/YES and DOWN/NO buttons to increase or decrease a displayed gas reading when performing a span (zero for oxygen) operation, and use the ENTER button to accept a displayed value and continue.

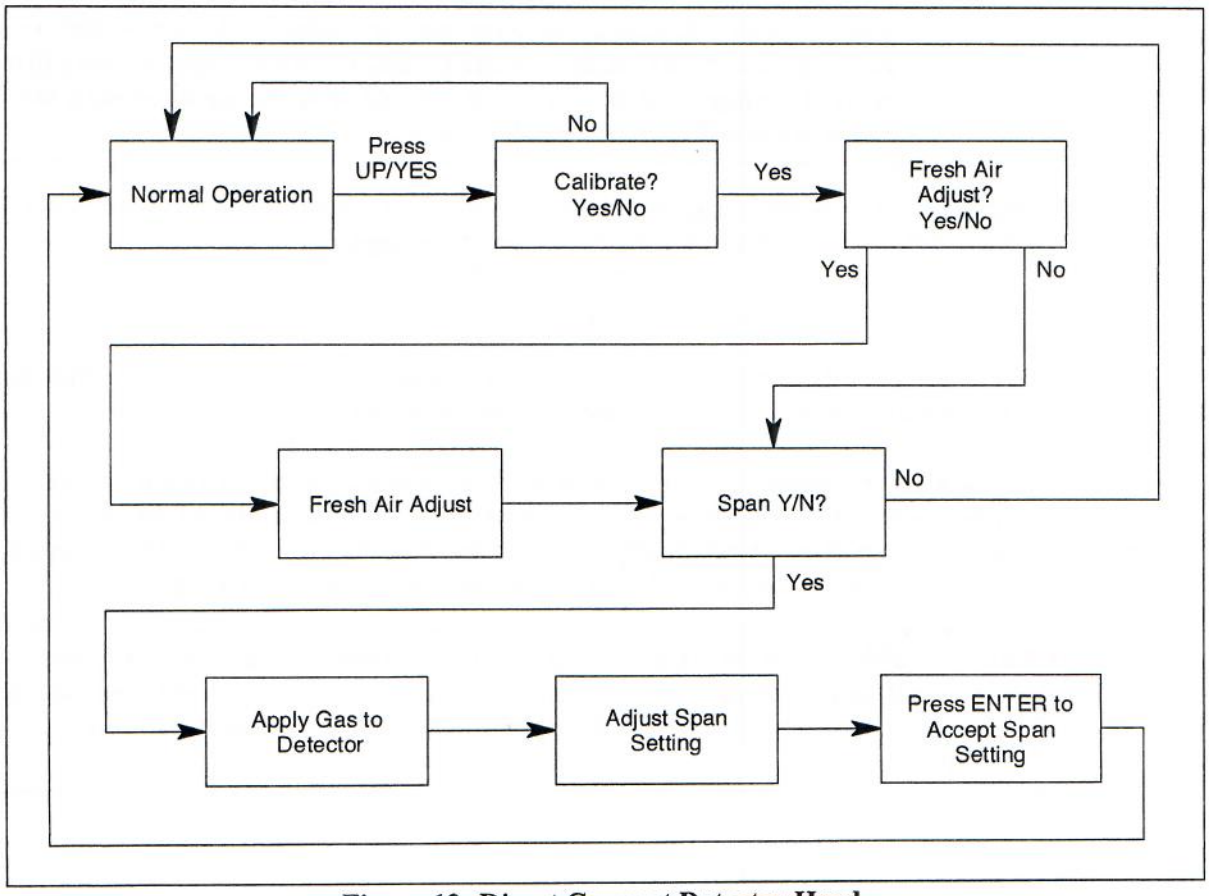

Figure 12: Direct Connect Detector Head

Calibrating a 4 - 20 mA Detector Head

If a 4-20 mA detector head is installed on the Beacon 110, proceed as follows:

1. The display will be alternating between **CAL AT AMP** and the current gas reading as described above.
2. Verify that the detector head is in a fresh-air environment. (If necessary, use a zero-emission air cylinder, also known as zero air, to introduce a fresh-air sample when adjusting the fresh air reading below.)
3. Adjust the detector head's fresh air reading (sometimes referred to as the zero reading for non-oxygen detector heads). See the detector head operator's manual for instructions on how to adjust the fresh air reading.
4. Apply calibration gas to the detector head's detector and adjust the detector head's span reading (zero reading for oxygen). See the detector head's operator's manual for instructions on how to adjust the span reading (zero reading for oxygen).
5. Press and release the ENTER button to indicate that you are done with calibrating the detector head. The display will indicate **Leaving CAL Mode** for a few seconds.
6. The display will now alternate between the normal operation screen and the message **REMOVE CAL GAS** for 1 minute. If the calibration gas has not been removed from the detector, remove it now to avoid unwanted alarms.

   During this 1 minute period, the 4 - 20 mA output will remain fixed at 3.5 mA (17.4 mA if an oxygen detector head is installed) and the relays will remain in their non-alarm state to avoid unwanted alarms while the calibration gas clears from the detector. At the end of the 1 minute period, the **REMOVE CAL GAS** message will stop appearing and the Beacon 110 will return to normal operation.

Calibrating a Direct Connect Detector Head

If a direct connect detector head is installed on the Beacon 110, proceed as follows:

1. The display will indicate **FreshAir Adjust?** as described above in "Entering Calibration Mode".
2. If you want to skip adjusting the fresh air reading, press and release the DOWN/NO button. The display will indicate **SPAN w/Cal Gas? (ZERO w/Cal Gas?** for an oxygen detector head). Skip the next step and continue with step 4.

   If you want to continue with adjusting the fresh air reading, press and release the UP/YES button. **ENTER** will alternate with **FreshAir** on the top display line and the current gas reading will be on the bottom display line.
3. If the detector is in a fresh air environment, press and release the ENTER button. The Beacon 110 will perform a fresh air adjustment and the display will indicate **SPAN w/Cal Gas? (ZERO w/Cal Gas?** for an oxygen detector head).

   If you suspect the detector area is not a fresh air environment, apply zero air to the detector before pressing the ENTER button to perform the fresh air adjustment. See the detector head operator's manual for instructions to apply zero air to the detector. The Beacon 110 will freeze the display reading at the lowest level reached while applying zero air (highest level for an oxygen detector head). After applying zero air for the required amount of time, usually two minutes, remove the zero air source from the detector. Press and release the ENTER button at the Beacon 110. The Beacon 110 will perform a fresh air adjustment and the display will indicate **SPAN w/Cal Gas? (ZERO w/Cal Gas?** for an oxygen detector head).

Replacing the Fuses

The Beacon 110 has two replaceable AC fuses.

NOTE: To replace other components of the Beacon 110, contact RKI Instruments, Inc. for further information.

1. Turn off or unplug all incoming power to the Beacon 110.
2. Open the housing door of the Beacon 110, then place the power switch in the OFF position.
3. Locate the vertical fuse holders above the AC In Terminal Strip. The AC fuses are labelled F1 and F2 on the main PCB silkscreen.
4. Use a flat-blade screwdriver to rotate the applicable fuse holder 1/4 turn counterclockwise. The fuse holder releases from the socket.
5. Remove the fuse holder from the socket, then remove the fuse from the fuse holder.

CAUTION: *Verify that the replacement fuse is the same type and rating as the fuse you are replacing. See the "Parts List" on page 46 for correct fuse.*

6. Install the appropriate replacement fuse in the fuse holder, then place the fuse holder in the socket.
7. Push the fuse holder into the socket, then turn the holder 1/4 turn clockwise to secure it in the socket.
8. Plug in or turn on all incoming power to the Beacon 110.
9. Place the Beacon 110's power switch in the ON position, then verify that the Beacon 110 completes its warm-up sequence and enters normal operation.
10. Close and secure the housing door.

Preventive Maintenance

Preventive maintenance of the Beacon 110 consists of daily, monthly, and quarterly procedures to ensure that the detector head is operating properly. See the detector head operator's manual for preventive maintenance procedures that apply to the detector head supplied with your Beacon 110.

Table 9: Troubleshooting the Beacon 110 (Continued)

Condition	Symptom(s)	Probable Causes	Recommended Action
Buzzer Not Working	• The buzzer does not sound an audible alarm during alarm conditions. • The buzzer sounds weak or broken.	• The buzzer is disconnected or misconnected. • The buzzer is malfunctioning.	1. Verify that the wiring to the **ALARM BUZZER** + & - terminals of the Controller Terminal Strip is correct and secure. 2. If the buzzer difficulties continue, contact RKI for further instruction.
Reset Switch Not Working	• The buzzer does not silence when you press the reset switch. • The alarm 1 or alarm 2 circuit does not reset when you press the reset switch after the alarm condition passes.	• The reset switch is disconnected or misconnected. • The reset switch is malfunctioning.	1. Verify that the wiring to the **ALARM RESET** (2) terminals of the Alarm/ Controller Terminal Strip is correct and secure. 2. If the reset switch difficulties continue, contact RKI for further instruction.
If Installed, Option Strobe Not Working	• The strobe does not flash when an alarm 1 or alarm 2 condition occurs. • The strobe does not flash when a fail condition occurs.	• The strobe is not setup to activate in an alarm 1 or alarm 2 condition. • The strobe is not connected to the strobe terminal strip properly. • The strobe is malfunctioning.	1. Verify that the strobe is setup properly for the desired alarm operation in Configuration Mode. See "Chapter 5: Configuration Mode" on page 31. 2. Verify that the strobe is wired properly to the strobe terminal strip. The red wire goes to the + terminal and the black wire goes to the - terminal.

Appendix A: Control Button Quick Reference Guide

The Beacon 110's control buttons and reset switch allow access to operational modes, resetting of alarms, and display of the Information Screen. Table 11 shows which button combinations perform these functions and which parameters are available for adjustment while in the operational modes. While in these modes, display prompts showing a "?" require you to respond by pressing either the UP/YES (for yes) or DOWN/NO (for no) button. To change parameter settings, use the UP/YES and DOWN/NO buttons to get the desired setting, then press and release the ENTER button to accept the setting.

Table 11: Control Button Quick Reference Chart

Mode Entered or Function Performed	Button Combination	Adjustable or Viewable Parameters
Alarm Reset	Press and Release the Reset Switch	n/a
Min/Max	Press and Hold the Reset Switch for 3 seconds	Minimum and maximum readings can be viewed and reset.
Show Information Screen	Press and Hold DOWN/NO	• Operating DC Voltage. For AC powered units, this is the DC voltage from the power supply. • Beacon 110 Version/Revision Information
Calibration Mode	Press and Hold UP/YES for 5 seconds	• Fresh Air Adjust • Span (or Zero for Oxygen) Adjust with Calibration Gas
Configuration Mode	Press and Hold UP/YES & ENTER for 5 seconds	• Alarm Levels • Increasing or Decreasing Alarms • Normally Energized or Normally De-energized Relays • Latching or Self-resetting Alarms • Strobe operation (if installed) • Alarm On Delay • Alarm Off Delay (if self-resetting) • Zero Suppression • Noise Filter • Calibration Time-out Period
Input Mode	Press and Hold UP/YES and DOWN/NO for 5 seconds	Define Detector Head Input

Beacon 110 Detector Head Specifications
65-2497RK

Target Gas	Oxygen (O_2)
Sampling Method	Diffusion
Alarm 1 Setpoint	19.5% volume, decreasing*
Alarm 2 Setpoint	23.5% volume, increasing*
Response Time	90% in 30 seconds
Accuracy	± 0.5% O_2

* *These specifications represent RKI standard settings; however, you can adjust them in Configuration Mode.*

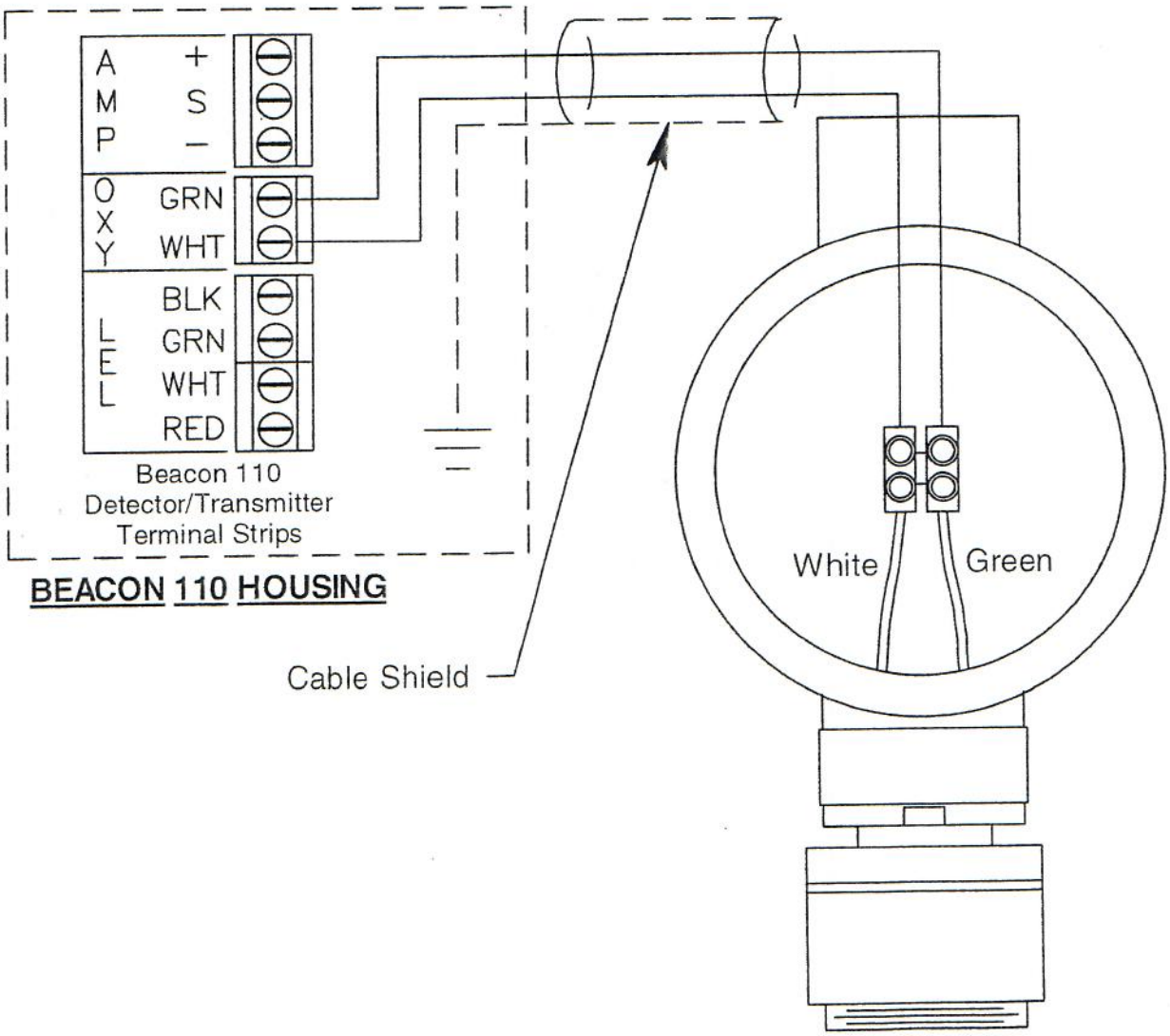

65-2497RK Wiring to Beacon 110

INSTRUMENTS

65-2494RK/65-2497RK Oxygen Detector Operator's Manual

Part Number: 71-0179RK

Revision: A

Released: 6/24/21

www.rkiinstruments.com

Product Warranty

RKI Instruments, Inc. warrants gas alarm equipment sold by us to be free from defects in materials, workmanship, and performance for a period of one year from date of shipment from RKI Instruments, Inc. Any parts found defective within that period will be repaired or replaced, at our option, free of charge. This warranty does not apply to those items which by their nature are subject to deterioration or consumption in normal service, and which must be cleaned, repaired, or replaced on a routine basis. Examples of such items are:

a) Absorbent cartridges

b) Pump diaphragms and valves

c) Fuses

d) Batteries

e) Filter elements

Warranty is voided by abuse including mechanical damage, alteration, rough handling, or repair procedures not in accordance with the operator's manual. This warranty indicates the full extent of our liability, and we are not responsible for removal or replacement costs, local repair costs, transportation costs, or contingent expenses incurred without our prior approval.

THIS WARRANTY IS EXPRESSLY IN LIEU OF ANY AND ALL OTHER WARRANTIES AND REPRESENTATIONS, EXPRESSED OR IMPLIED, AND ALL OTHER OBLIGATIONS OR LIABILITIES ON THE PART OF RKI INSTRUMENTS, INC. INCLUDING BUT NOT LIMITED TO, THE WARRANTY OF MERCHANTABILITY OR FITNESS FOR A PARTICULAR PURPOSE. IN NO EVENT SHALL RKI INSTRUMENTS, INC. BE LIABLE FOR INDIRECT, INCIDENTAL, OR CONSEQUENTIAL LOSS OR DAMAGE OF ANY KIND CONNECTED WITH THE USE OF ITS PRODUCTS OR FAILURE OF ITS PRODUCTS TO FUNCTION OR OPERATE PROPERLY.

This warranty covers instruments and parts sold to users by authorized distributors, dealers, and representatives as appointed by RKI Instruments, Inc.

We do not assume indemnification for any accident or damage caused by the operation of this gas monitor, and our warranty is limited to the replacement of parts or our complete goods.

Overview

This manual describes the 65-2497RK oxygen detector. This manual also describes how to install, start up, maintain, and calibrate the oxygen detector when used with a gas monitoring controller. A parts list at the end of this manual lists replacement parts and accessories for the oxygen detector.

The 65-2497RK oxygen detector includes the 65-2494RK oxygen detector and a junction box. This manual may also be used for the 65-2494RK oxygen detector which does not include a junction box and is normally mounted in one of a controller's conduit hubs. If you are using a 65-2494RK oxygen detector, disregard all references to the junction box and junction box terminal strip.

Specifications

WARNING: ***Do not use this product in a manner not specified in this instruction manual.***

Table 1 lists specifications for the 65-2494RK and 65-2497RK oxygen detectors.

Table 1: Specifications

Target Gas	Oxygen (O_2)
Sampling Method	Diffusion
Detection Range	0-25% oxygen
Response Time	90% in 30 seconds
Accuracy	± 0.5% O_2
Operating Temperature	-4°F to 113°F (-20°C to 45°C)

WARNING: ***When using the 65-2494RK/65-2497RK, you must follow the instructions and warnings in this manual to assure proper and safe operation of the 65-2494RK/65-2497RK and to minimize the risk of personal injury. Be sure to maintain and periodically calibrate the 65-2494RK/65-2497RK as described in this manual.***

Detector Housing Body

The detector housing body protects the electronic components within the housing. Use the mounting threads at the top of the housing to screw the oxygen detector into a 3/4 NPT hub. Two wires extend from the top of the detector housing body. Use these wires to connect the detector to a controller. One of the wires is white and one of the wires is green.

The housing body includes two sockets installed on a circuit board. These sockets accept the plug-in sensor's two pins to provide an electrical connection for the sensor. The circuit board with the sockets conditions the sensor's signal before the signal reaches the controller.

Housing Cap & Cap Gasket

The housing cap screws onto the detector housing. It retains the plug-in sensor and protects it from damage. A foam gasket inside the housing cap seals against the face of the sensor when the cap is screwed on the housing body. A hydrophobic membrane on the outside of the cap face keeps water and particulates away from the sensor face behind the cap. Unscrew the detector cap to access the plug-in sensor for maintenance or replacement. A cap gasket seals the interface between the housing and cap.

Plug-in Sensor

The plug-in sensor is secured in the detector assembly by the housing cap. Through a series of chemical and electrical reactions, the sensor produces an electrical output that corresponds to the detection range of the detector. The sensing element used is a capillary type that is not susceptible to output changes with changes in atmospheric pressure.

Junction Box

Use the junction box to install the oxygen detector at a mounting site that is remote from a controller and to protect the detector wiring connections. Two conduit hubs allow you to mount the detector to the junction box and connect the wiring from the detector to a controller. Three spacers installed on the back of the junction box control the distance of the junction box from a mounting surface and ensure that there is enough room to install a calibration cup on the detector during calibration. A terminal block within the junction box facilitates the wiring connections. A cover on the front of the junction box allows access to the interior of the junction box.

Installation

This section describes procedures to mount the oxygen detector in the monitoring environment and wire the detector to a controller.

Mounting the Oxygen Detector

NOTE: If you are installing a 65-2494RK, it does not include a junction box and is usually factory installed in one of a controller's conduit hubs or may be field installed using the 3/4 NPT threads on the end with the wires. The 65-2497RK includes a junction box as shown in Figure 3 below.

1. Select a mounting site that is representative of the monitoring environment. Consider the following when you select the mounting site.
   - Select a site where the detector is not likely to be bumped or disturbed. Make sure there is sufficient room to perform start-up, maintenance, and calibration procedures.
   - Select a site where the target gas is likely to be found first.

6. Connect the two wires to the detector using the terminal block.

CAUTION: *If using shielded cable, leave the drain wire insulated and disconnected at the detector. You will connect the opposite end of the cable's drain wire at the controller.*

7. Secure the junction box cover to the junction box.
8. Route the cable or wires leading from the oxygen detector through one of the conduit hubs at the controller housing. Use appropriate conduit fittings and construction technique for the environmental rating of the controller. RKI controllers are typically rated NEMA 4X.

CAUTION: *Do not route power and detector wiring through the same conduit hub. The power cable may disrupt the transmission of the detector signal to the controller.*

9. Connect the wires to the applicable controller terminal strip. See the controller operator's manual and the controller's detector head specification sheet for the 65-2497RK detector.

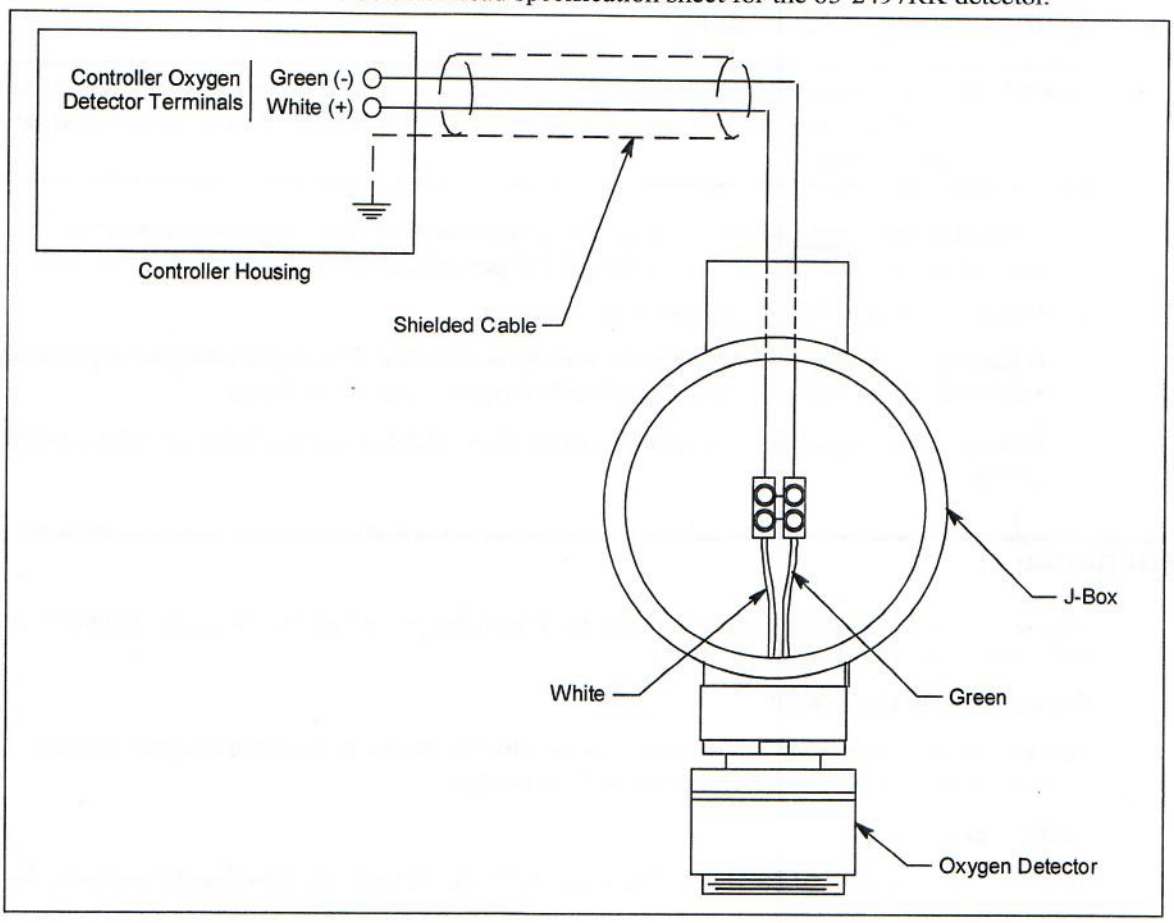

Figure 4: Wiring the Oxygen Detector to a Controller

10. If using shielded cable, connect the cable's drain wire to an available chassis ground at the controller. RKI controllers typically have a ground stud that is a convenient grounding location.

Troubleshooting

The troubleshooting guide describes symptoms, probable causes, and recommended action for problems you may encounter with the oxygen detector.

NOTE: This troubleshooting guide describes detector problems only. See the controller operator's manual for problems you may encounter with the controller.

Table 2: Troubleshooting the Oxygen Detector

Condition	Symptom(s)	Probable Causes	Recommended Action
Fail Condition	• Controller indicates a fail condition.	• The detector wiring is disconnected or misconnected. • The plug-in sensor is not properly plugged into the socket pattern in the detector housing body. • The detector's zero reading is low enough to cause a fail condition. • The detector is malfunctioning.	1. Verify that the detector wiring is correct and secure. 2. Confirm that the plug-in sensor is installed properly. 3. Perform a fresh air adjustment. A full calibration is recommended. 4. If the fail condition continues, replace the plug-in sensor as described later in this section. 5. If the fail condition continues, contact RKI for further instruction.
Slow or No Response/ Difficult or Unable to Calibrate	• Unable to accurately set the fresh air or zero reading during calibration. • Detector requires frequent calibration. ***Note:*** *Under "normal" circumstances, the transmitter requires calibration once every 3 months.* *Some applications may require a more frequent calibration schedule.*	• The calibration cylinder is low, out-dated, or defective. • The calibration gas is not an appropriate concentration. • The membrane on the detector housing cap is blocked with dirt or some other particulate contamination. • The detector is malfunctioning.	1. Verify that the calibration cylinder contains an adequate supply of a fresh test sample. 2. Verify that the calibration gas concentration is appropriate for the transmitter. Zero emission air (20.9% oxygen) is normally used for a fresh air adjustment if the environment is suspect and 100% nitrogen (0% oxygen) is normally used for a zero adjustment. 3. Check the sensor face for dirt. Clean if necessary. 4. Check the face of the detector housing cap and remove any particulate contamination from the hydrophobic membrane if necessary. If the membrane appears saturated with contamination or damaged, replace the membrane as described in the next section. 5. If the calibration/response difficulties continue, replace the plug-in sensor as described later in this section. 6. If the calibration/response difficulties continue, contact RKI for further instruction.

Replacing the Oxygen Detector

NOTE: In most cases, it is only necessary to replace the plug-in sensor.

1. Turn off the controller.
2. Turn off or unplug incoming power to the controller.
3. If the detector is installed directly on a controller, open the controller door.

   If the detector is installed remotely from a controller in a junction box, remove the junction box cover.
4. If the detector is installed directly on a controller, disconnect the detector leads from the detector terminal strip in the controller. Note the position of the color-coded leads as you remove them.

   If the detector is installed remotely from a controller in a junction box, disconnect the detector leads from the terminal block in the junction box. Note the position of the color-coded leads as you remove them.
5. Unscrew the detector from the controller conduit hub or junction box conduit hub.
6. Guide the detector leads of the replacement detector through the controller conduit hub or junction box conduit hub, then screw the mounting threads of the detector into the hub. If necessary for environmental conditions, apply thread sealant or Teflon tape to the hub and/or detector threads to seal them.
7. If the detector is installed directly on a controller, connect the detector leads to the appropriate detector terminal strip terminals. See Figure 4 on page 9 for wiring to a generic controller. See the controller operator's manual and the controller's detector head specification sheet for the 65-2494RK detector for wiring specific to your controller.

   If the detector is installed remotely from a controller in a junction box, connect the detector leads to the terminal block the same way the old detector was wired (see Figure 4 on page 9). See the controller operator's manual and the controller's detector head specification sheet for the 65-2497RK detector to verify the connections to the controller are correct.
8. If the detector is installed remotely from a controller in a junction box, reinstall the junction box cover.
9. Turn on or plug in power to the controller.
10. Turn on the controller and place into normal operation.

CAUTION: *Allow the replacement detector to warm up for 5 minutes before you continue with the next step.*

11. Calibrate the replacement detector as described in "Calibration" on page 14.

6. Unscrew the regulator from the zero air calibration cylinder. Leave the sample tubing connected to the regulator and the calibration cup.

NOTE: Depending on the size of your zero air cylinder, it is possible that you will have a different regulator for the zero air cylinder and the nitrogen gas cylinder. If necessary to fit the nitrogen gas cylinder, change the regulator.

Setting the Zero Reading

1. Screw the regulator into the 100% nitrogen calibration cylinder. Make sure the regulator is off. It is off when the on/off knob is turned all the way clockwise.
2. Follow the directions in the controller operator's manual for setting the zero reading.
3. When the directions call for exposing the detector to gas, turn the regulator's on/off knob counterclockwise to open it. Gas will begin to flow.
4. Allow the gas to flow to the detector for 2 minutes.
5. Set the zero reading according to the controller operator's manual.
6. After setting the zero reading, turn the regulator's on/off knob clockwise to turn it off.
7. Unscrew the regulator from the cylinder.
8. Unscrew the calibration cup from the oxygen detector. Make sure that you do not loosen the detector housing cap when you unscrew the calibration cup.

NOTE: For convenience, leave the regulator and calibration cup connected by the sample tubing.

---

9. Allow about 45 seconds for the gas reading to increase above the decreasing alarm point and then return the controller to normal operation.

NOTE: If you do not allow the gas reading to increase above the decreasing alarm point, then unwanted alarms may occur.

---

10. Verify that the controller display reading increases and stabilizes at 20.9% oxygen.
11. Store the components of the calibration kit in a safe and convenient place.