ME 144L Pre-Lab 6: Strain Gauges and Force Measurements

Alejandro Diaz
TA: Gabrielle Naquila

March 3, 2026

1 Wheatstone Bridge for Strain-Gage Measurements

Strain gauges are designed to convert mechanical deformations into electrical resistances that can be read with electronic systems. On it's own, a strain gauge's measured changes in resistances are extremely sensitive, which can cause issues when exposed to different thermal conditions or vibrations, making it very difficult to interpret signals with heavy noise involved. A Wheatstone bridge solves this issue by arranging the strain gauge elements into a 4 resistor network, essentially creating a leveling baseline. The output voltage (V_{out}) can be modeled as proportional to the source voltage, V_s in the following equation:

$$V_{out} = V_s \left(\frac{R_3}{R_3 + R_4} - \frac{R_2}{R_1 + R_2} \right) \tag{1}$$

When all four resistors are equal and no load is applied, the bridge is balanced and $V_{out} = 0$. This differential output highlights the key ability that rather than trying to precisely measure absolute resistance, the bridge gives a near-zero baseline that only changes when strain is applied, making it much easier to amplify accurately.

2 NAU7802 Qwiic Scale Hookup Guide

The SparkFun Qwiic Scale uses a NAU7802 24-bit analog-to-digital converter to connect a Wheatstone-bridge load cell with a microcontroller. The NAU7802 communicates over I2C, allowing it use the Qwiic connector system, which runs at 3.3 V logic.

On the load cell side, four wires connect to a spring terminal on the board with silkscreen labels: Red ($E+$), Black ($E-$), Green ($A+$), and White ($A-$). An optional Yellow wire connects to a Shield pin to reduce EMI. On the microcontroller side, the Qwiic connector carries all four required signals — SDA, SCL, 3.3 V, and GND in a single cable. Figure 1 shows the key connections.

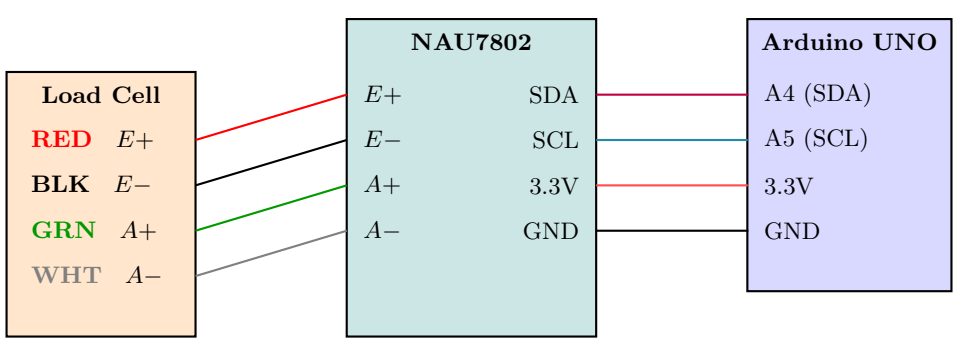

Figure 1: Wiring diagram between the load cell, NAU7802 Qwiic Scale Board, and Arduino UNO. Note: The TikZ code for LaTeX generated with the assistance of Claude Sonnet 4.6 (Anthropic).

3 Load Cell Description and Strain Gage Layout

3.1 Beam Type and Specifications

The SparkFun Mini Load Cell (TAL221) is a parallel beam type load cell. It consists of a short aluminum alloy bar with two parallel flexure sections that deform under load. The key specifications are summarized below.

Parameter	**Value**
Model	TAL221
Capacity	500 g
Beam type	Parallel beam (double-bending)
Dimensions	47 mm × 12 mm × 6 mm
Number of strain gauges	4

Table 1: Specifications for the SparkFun TAL221 Mini Load Cell

3.2 Strain Gage Placement and Tension/Compression Assignment

In a parallel beam configuration, one end of the beam is fixed and the load is applied at the free end, creating a bending moment along the flexure sections. Four strain gauges are bonded to the beam, two on the top surface and two on the bottom surface of each flexure web. This is illustrated below in Figure 2.

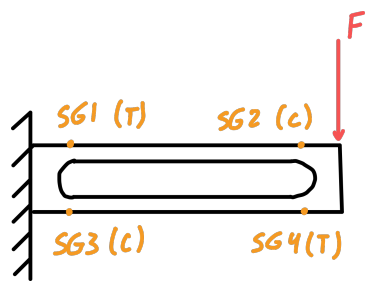

Figure 2: Parallel Beam Flexure Load Cell. Strain Gauge Locations (SG) labeled in Tension (T), and Compression (C). Applied Force (F) Indicated in Red

The bending moment distribution in a parallel beam reverses sign between the two flexure sections, which is what causes the tension/compression pattern to flip between the left and right webs. Under a downward load, the top surface of the left flexure is in tension while its bottom is in compression; at the right flexure, this reverses. Wiring all four gauges into a full bridge ensures their contributions add, providing passive temperature compensation.

4 Strain-Gage vs. Piezoelectric Load Cells

Choosing between a strain-gauge-based load cell and a piezoelectric-based load cell comes down to what the application requires. Both of these sensors are capable of providing highly accurate measurements of applied force, but they have different approaches that stand out.

A piezoelectric load cell works by directly converting the voltage generated by the deformation of a crystal into a measurement of applied force, which is good for providing highly fast responses to changing conditions. A major drawback is that a piezoelectric cell cannot hold static measurements well, as the charge generated from the sensor decays over time.

The strain gauge load cell does not have this issue. Since the measurement is based on changes in resistance rather than the accumulation of charge, the measurement is perfectly stable in the presence of a constant load for as long as the load is applied. This makes the strain gauge load cell the

correct choice for any static or held force measurements. This includes the vast majority of industrial measurements. For example, the TAL221 load cell used in this lab is designed to measure the weight of an object resting on it. This is a static measurement that a piezoelectric sensor cannot perform. Piezoelectric sensors are good if the measurement situation has rapidly varying dynamic forces.

In industrial purposes, it is much more common for measuring a static force or quasi-static load to be done with a strain gauge load cell for these reasons. Strain gauge cells are much easier to calibrate as well, which makes them a great tool for industries and products when recalibrating and ensuring measurement performance is accurate. When strain gauges can last longer, be maintained, and provide immediate use for simple force measurement conditions, they become a much more practical option compared to piezoelectric systems.