Replacement Parts, W/D & Tech Data
NHP018-060 Series

NOTE: This illustration is for reference only. The appearance of your unit may differ from the unit shown.

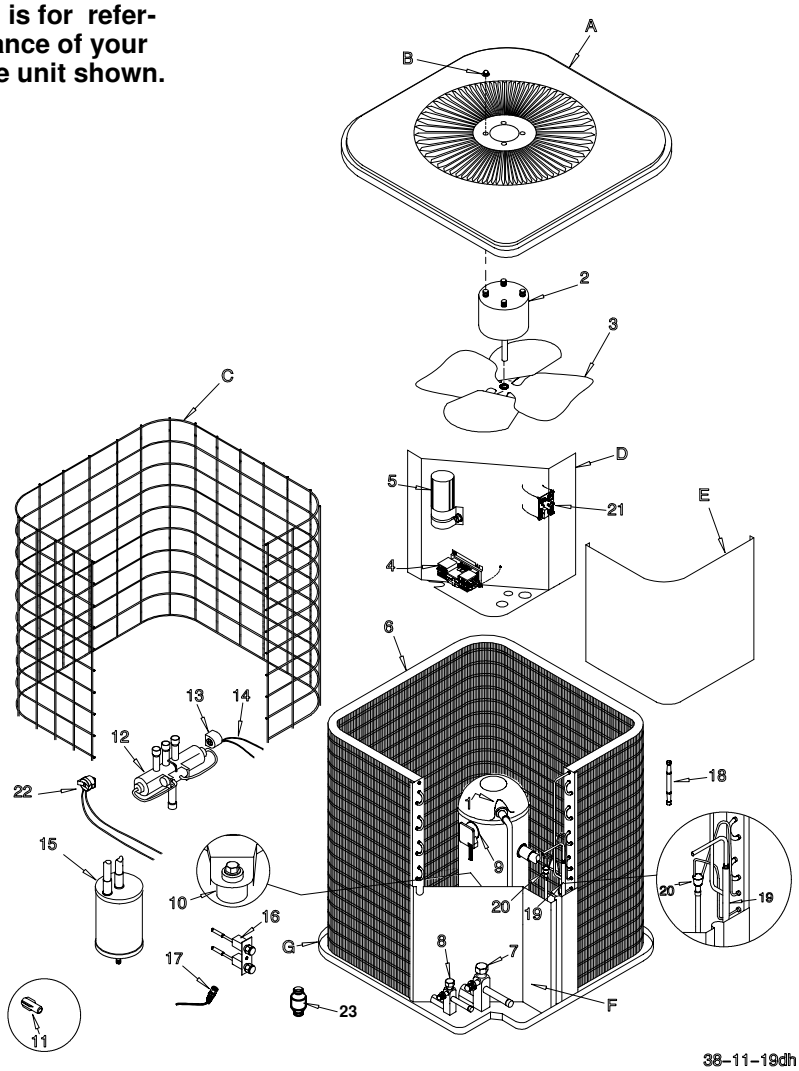

38-11-19dh

KEY NO.	DESCRIPTION	PART NUMBER	NHP018AKA1	NHP018GKA1	NHP018MKA1	NHP024AKA1	NHP024GKA1	NHP024MKA1	NHP030AKA1	NHP030GKA1	NHP030MKA1	NHP036AKA1	NHP036GKA1	NHP036MKA1	NHP036AKB1	NHP036GKB1	NHP036MKB1	NHP042AKA1	NHP042GKA1	NHP042MKA1	NHP048AKA1	NHP048GKA1	NHP048MKA1	NHP048AKA2	NHP048GKA2	NHP048MKA2	NHP060AKA1	NHP060GKA1	NHP060MKA1	NHP060AKA2	NHP060GKA2	NHP060AKA3	NHP060GKA3	NHP060MKA3
A	Panel, Top	1086005	1	1	1	1	1	1	1	1	1																							
A		1086008	-	-	-	-	-	-	-	-	-	1	1	1	1	1	1	1	1	1	1	1	1	1	1	1	1	1	1	1	1	1	1	1
B	Nut, Cap	1086697	4	4	4	4	4	4	4	4	4	4	4	4	4	4	4	4	4	4	4	4	4	4	4	4	4	4	4	4	4	4	4	4
C	Grille, Inlet	1086075	1		1																													
C		1086077	-	-	-	1		1																										
C		1086078	-	-	-	-	-	-	1		1																							
C		1086161	-	-	-	-	-	-	-	-	-	1		1	1		1																	
C		1086400	-	-	-	-	-	-	-	-	-	-		-	-	-	-	1		1							1		1	1		1		1
C		1086401	-	-	-	-	-	-	-	-	-	-		-	-	-	-	-	-	-	1		1	1		1								
C	Guard, Coil (Metal)	1086302	-	1																														
C		1086304	-		-	-	1																											
C		1086305	-	-	-	-	-	-	-	1																								
C		1086306	-	-	-	-	-	-	-	-	-	-	1		-	1																		
C		1086309	-	-	-	-	-	-	-	-	-	-		-	-	-	-	-	1									1			1		1	
C		1086310	-	-	-	-	-	-	-	-	-	-		-	-	-	-	-	-	-	-	1		-	1									
C	Guard, Coil (Mesh)	1087401	-		1																													
C		1087403	-		-	-	-	1																										
C		1087405	-	-	-	-	-	-	-	-	1																							
C		1087407	-	-	-	-	-	-	-	-	-	-		1	-	-	1																	
C		1087408	-	-	-	-	-	-	-	-	-	-		-	-	-	-	-	-	1									1					1
C		1087410	-	-	-	-	-	-	-	-	-	-		-	-	-	-	-	-	-	-		1	-	-	1								
D	Box, Control	1087507	1	1	1	1	1	1	1	1	1										1	1	1	1	1	1								
D		1087509	-	-	-	-	-	-	-	-	-	1	1	1	1	1	1	1	1	1							1	1	1	1	1	1	1	1
E	Cover, Control Box	1086004	1	1	1	1	1	1	1	1	1	1	1	1	1	1	1	1	1	1	1	1	1	1	1	1	1	1	1	1	1	1	1	1
F	Panel, Corner	1086323	1	1	1																													
F		1086324	-		-	1	1	1				1	1	1	1	1	1																	
F		1086326	-	-	-	-	-	-	1	1	1																							
F		1086325	-	-	-	-	-	-	-	-	-	-		-	-	-	-	1	1	1							1	1	1	1	1	1	1	1
F		1086327	-	-	-	-	-	-	-	-	-	-		-	-	-	-	-	-	-	1	1	1	1	1	1								
G	Panel, Base	1085982	1	1	1	1	1	1	1	1	1																							
G		1086041	-		-		-	-	-			1	1	1	1	1	1	1	1	1	1	1	1	1	1	1	1	1	1	1	1	1	1	1
)(	Pin, Push (Mesh Grille)	1087347	-	-	4			4			4			4			4			4			4			4			4					4
)(	Manual, Parts List	42803300105	1	1	1	1	1	1	1	1	1	1	1	1	1	1	1	1	1	1	1	1	1	1	1	1	1	1	1	1	1	1	1	1
)(	Manual, Owners	42802300100	1	1	1	1	1	1	1	1	1	1	1	1	1	1	1	1	1	1	1	1	1	1	1	1	1	1	1	1	1	1	1	1
)(	Manual, Installation	42101300100	1	1	1	1	1	1	1	1	1	1	1	1	1	1	1	1	1	1	1	1	1	1	1	1	1	1	1	1	1	1	1	1

Replacement Parts - NHP018-060 Series

KEY NO.	DESCRIPTION	PART NUMBER	NHP018AKA1	NHP018GKA1	NHP018MKA1	NHP024AKA1	NHP024GKA1	NHP024MKA1	NHP030AKA1	NHP030GKA1	NHP030MKA1	NHP036AKA1	NHP036GKA1	NHP036MKA1	NHP036AKB1	NHP036GKB1	NHP036MKB1	NHP042AKA1	NHP042GKA1	NHP042MKA1	NHP048AKA1	NHP048GKA1	NHP048MKA1	NHP048AKA2	NHP048GKA2	NHP048MKA2	NHP060AKA1	NHP060GKA1	NHP060MKA1	NHP060AKA2	NHP060GKA2	NHP060AKA3	NHP060GKA3	NHP060MKA3
1	Compressor	CR16KFPFV130	1	1	1																													
1		CR22KFPFV130	-	-	-	1	1	1																										
1		CR28KFPFV130	-	-	-	-	-	-	1	1	1																							
1		ZR36KCPFV130	-	-	-	-	-	-	-	-	-	1	1	1																				
1		CR34K6PFV130	-	-	-	-	-	-	-	-	-	-	-	-	1	1	1																	
1		CR38K6PFV130	-	-	-	-	-	-	-	-	-	-	-	-	-	-	-	1	1	1														
1		ZR45KCPFV135	-	-	-	-	-	-	-	-	-	-	-	-	-	-	-	-	-	-	1	1	1	1	1	1								
1		**ZR61KCPFV133	-	-	-	-	-	-	-	-	-	-	-	-	-	-	-	-	-	-	-	-	-	-	-	-	1	1	1	1	1	1	1	1
2	Motor, Condenser Fan	1086485	1	1	1	1	1	1																										
2		1086486	-	-	-	-	-	-	1	1	1																							
2		1086696	-	-	-	-	-	-	-	-	-	1	1	1	1	1	1	1	1	1	1	1	1	1	1	1	1	1	1	1	1	1	1	1
3	Fan Blade	1085684	1	1	1	1	1	1																										
3		1085958	-	-	-	-	-	-	1	1	1																							
3		1087333	-	-	-	-	-	-	-	-	-	1	1	1	1	1	1	1	1	1														
3		1087332	-	-	-	-	-	-	-	-	-	-	-	-	-	-	-	-	-	-	1	1	1	1	1	1	1	1	1	1	1	1	1	1
4	Contactor, 25 Amp	1050699	1	1	1	1	1	1	1	1	1	1	1	1	1	1	1																	
4	35 Amp	1050839	-	-	-	-	-	-	-	-	-	-	-	-	-	-	-	1	1	1	1	1	1	1	1	1								
4	40 Amp	1053980	-	-	-	-	-	-	-	-	-	-	-	-	-	-	-	-	-	-	-	-	-	-	-	-	1	1	1	1	1	1	1	1
5	Capacitor, 370 Volt. 3+25 Mfd	1086676	1	1	1																													
5	370 Volt 3+30 Mfd	1086677	-	-	-	1	1	1																										
5	370 Volt 3+35 Mfd	1086678	-	-	-	-	-	-	1	1	1																							
5	440 Volt 5+40 Mfd	1086642	-	-	-	-	-	-	-	-	-	1	1	1				1	1	1														
5	370 Volt 5+50 Mfd	1094993	-	-	-	-	-	-	-	-	-	-	-	-	1	1	1																	
5	370 Volt 5+40 Mfd	1086639	-	-	-	-	-	-	-	-	-	-	-	-	-	-	-	-	-	-	1	1	1	1	1	1								
5	370 Volt 5+60 Mfd	1086645	-	-	-	-	-	-	-	-	-	-	-	-	-	-	-	-	-	-	-	-	-	-	-	-	1	1	1	-	-	-	-	-
5	370 Volt 5+80 Mfd	1086648	-	-	-	-	-	-	-	-	-	-	-	-	-	-	-	-	-	-	-	-	-	-	-	-	-	-	-	1	1	-	-	-
5	370 Volt 5+70 Mfd	***1087950	-	-	-	-	-	-	-	-	-	-	-	-	-	-	-	-	-	-	-	-	-	-	-	-	-	-	-	-	-	1	1	1
6	Condenser Coil	1086455	1	1	1																													
6		1086456	-	-	-	1	1	1																										
6		1086457	-	-	-	-	-	-	1	1	1																							
6		1086458	-	-	-	-	-	-	-	-	-	1	1	1	1	1	1																	
6		1086459	-	-	-	-	-	-	-	-	-	-	-	-	-	-	-	1	1	1														
6		1086460	-	-	-	-	-	-	-	-	-	-	-	-	-	-	-	-	-	-	1	1	1	1	1	1								
6		1086461	-	-	-	-	-	-	-	-	-	-	-	-	-	-	-	-	-	-	-	-	-	-	-	-	1	1	1	1	1	1	1	1
7	Service Valve (Suction)	1086738	1	1	1	1	1	1																										
7		1085991	-	-	-	-	-	-	1	1	1	1	1	1	1	1	1																	
7		1085988	-	-	-	-	-	-	-	-	-	-	-	-	-	-	-	1	1	1	1	1	1	1	1	1	1	1	1	1	1	1	1	1
8	Service Valve (Liquid)	1085989	1	1	1	1	1	1	1	1	1	1	1	1	1	1	1	1	1	1	1	1	1	1	1	1	1	1	1	1	1	1	1	1
9	Plug, Compressor Harness	1081938	1	1	1	1	1	1																										
9		1081939	-	-	-	-	-	-	1	1	1	1	1	1	1	1	1	1	1	1														
9		1081940	-	-	-	-	-	-	-	-	-	-	-	-	-	-	-	-	-	-	1	1	1	1	1	1	1	1	1	1	1	1	1	1
10	Grommet, Compressor	1053188	4	4	4	4	4	4	4	4	4				4	4	4	4	4	4														
10		1052060	-	-	-	-	-	-	-	-	-	4	4	4							4	4	4	4	4	4	4	4	4	4	4	4	4	4
11	Restrictor, .048	1057994	1	1	1																													
11	.058	1069078	-	-	-	1	1	1																										
11	.063	1052933	-	-	-	-	-	-	1	1	1																							
11	.070	1053644	-	-	-	-	-	-	-	-	-	1	1	1																				
11	.067	1057899	-	-	-	-	-	-	-	-	-	-	-	-	1	1	1																	
11	.073	1054027	-	-	-	-	-	-	-	-	-	-	-	-	-	-	-	1	1	1														
11	.079	1053661	-	-	-	-	-	-	-	-	-	-	-	-	-	-	-	-	-	-	1	1	1	1	1	1								
11	.090	1053663	-	-	-	-	-	-	-	-	-	-	-	-	-	-	-	-	-	-	-	-	-	-	-	-	1	1	1	1	1	1	1	1
12	Valve, Reversing	34329022	1	1	1	1	1	1																										
12		34329020	-	-	-	-	-	-	1	1	1																							
12		34329000	-	-	-	-	-	-	-	-	-	1	1	1	1	1	1																	
12		513542	-	-	-	-	-	-	-	-	-	-	-	-	-	-	-	1	1	1														
12		34329002	-	-	-	-	-	-	-	-	-	-	-	-	-	-	-	-	-	-	1	1	1	1	1	1								
12		34329030	-	-	-	-	-	-	-	-	-	-	-	-	-	-	-	-	-	-	-	-	-	-	-	-	1	1	1	1	1	1	1	1
13	Coil, Reversing Valve	34329055	1	1	1	1	1	1	1	1	1	1	1	1	1	1	1	1	1	1	1	1	1	1	1	1	1	1	1	1	1	1	1	1
14	Harness, Reversing Valve Coil	1066711	1	1	1	1	1	1	1	1	1	1	1	1	1	1	1	1	1	1	1	1	1	1	1	1	1	1	1	1	1	1	1	1
15	Accumulator	1063781	1	1	1	1	1	1																										
15		1092835	-	-	-	-	-	-	1	1	1	1	1	1	1	1	1																	
15		1081064	-	-	-	-	-	-	-	-	-	-	-	-	-	-	-	1	1	1														
15		1081063	-	-	-	-	-	-	-	-	-	-	-	-	-	-	-	-	-	-	1	1	1	1	1	1								
15		1081065	-	-	-	-	-	-	-	-	-	-	-	-	-	-	-	-	-	-	-	-	-	-	-	-	1	1	1	1	1	1	1	1
16	Port Valve Asy	1086714	1	1	1	1	1	1	1	1	1	1	1	1	1	1	1	1	1	1	1	1	1	1	1	1	1	1	1	1	1	1	1	1
17	Switch, Low Pressure	1081019	1	1	1	1	1	1	1	1	1	1	1	1	1	1	1	1	1	1	1	1	1	1	1	1	1	1	1	1	1	1	1	1
18	Control, Flow .037	1086601	1	1	1																													
18	.040	1086602	-	-	-	1	1	1																										
18	.046	1086603	-	-	-	-	-	-	1	1	1																							
18	.051	1087255	-	-	-	-	-	-	-	-	-	-	-	-	1	1	1																	
18	.056	1086604	-	-	-	-	-	-	-	-	-	1	1	1				1	1	1														
18	.065	1086605	-	-	-	-	-	-	-	-	-	-	-	-	-	-	-	-	-	-	1	1	1	1	1	1								
18	.073	1086606	-	-	-	-	-	-	-	-	-	-	-	-	-	-	-	-	-	-	-	-	-	-	-	-	1	1	1	1	1	1	1	1
20	Distributor	1052830	1	1	1																													
20		1053086	-	-	-	1	1	1	1	1	1	1	1	1	1	1	1	1	1	1														
20		1053087	-	-	-	-	-	-	-	-	-	-	-	-	-	-	-	-	-	-	1	1	1	1	1	1								
20		1052793	-	-	-	-	-	-	-	-	-	-	-	-	-	-	-	-	-	-	-	-	-	-	-	-	1	1	1	1	1	1	1	1
21	Control, Defrost	1087562	1	1	1	1	1	1	1	1	1	1	1	1	1	1	1	1	1	1	1	1	1	1	1	1	1	1	1	1	1	1	1	1
22	Sensor, Defrost Control	1082738	1	1	1	1	1	1	1	1	1	1	1	1	1	1	1	1	1	1	1	1	1	1	1	1	1	1	1	1	1	1	1	1
23	Muffler	1059730	-	-	-	-	-	-	-	-	-	-	-	-	-	-	-	-	-	-	-	-	-	1	1	1						1	1	1

** ZR61KCPFV133 Replacement on all 5 ton.
***1087950 Cap must be used with compressor change for A1 and A2 models

NHP018, 24, 30 & 42

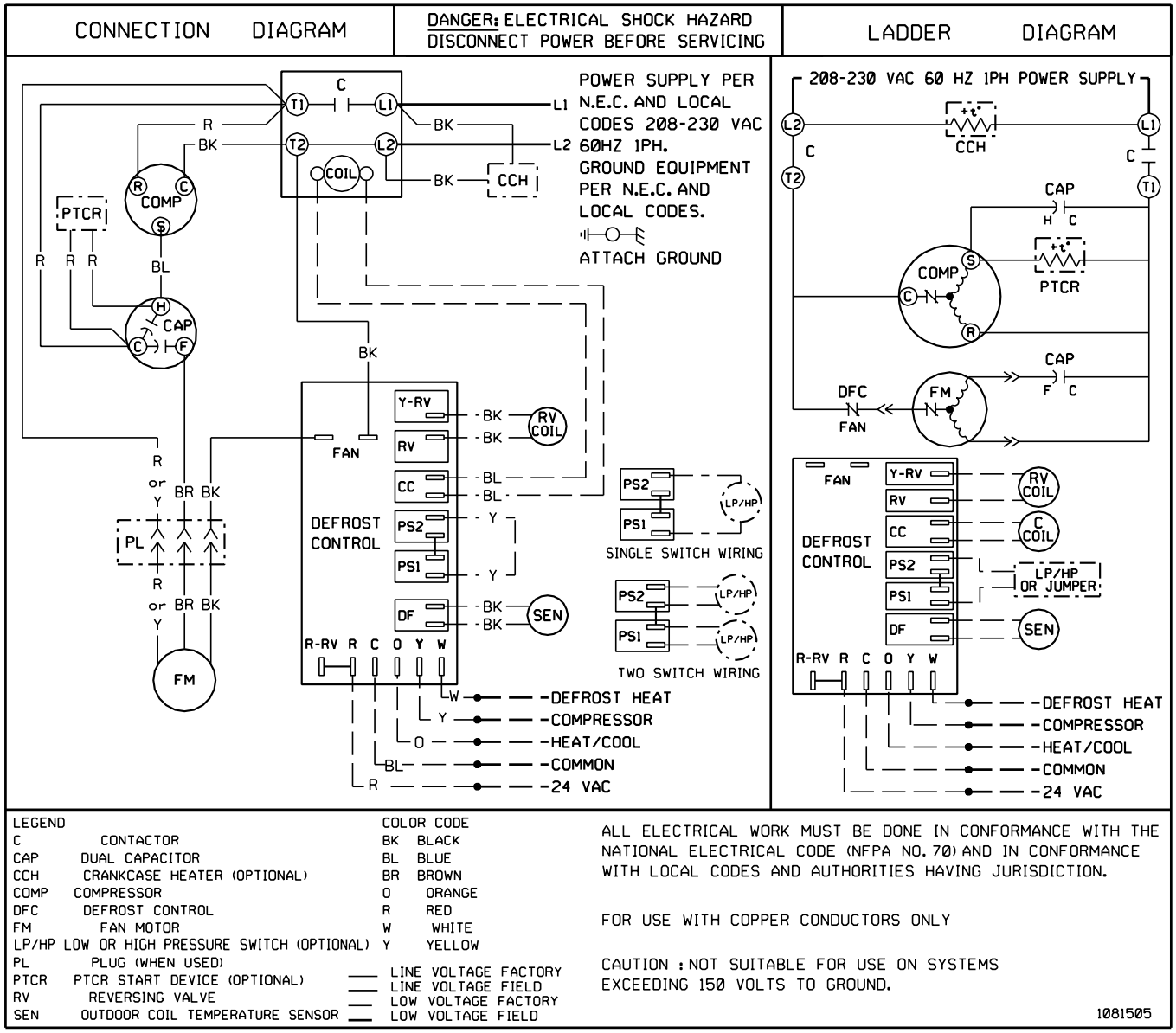

Outdoor Units (2)	COIL MODELS (1)																													
	EPA/D/M18 (51)	EPA/D/M24 (59)	EPA/D/M30 (65)	EPA/D/M36 (72)	EPA/D/M42 (78)	EPA/D/M48 (79)	EPA/D/M60 (90)	EPP024 (59)	EPP030 (65)	EPP036 (72)	EAH5524SA (56)	EAH5536SA (71)	EAH5548SA (84)	EAH5560SA (89)	EEA/D24 (51)	EEA/D30 (59)	EEA/D36 (65)	EEA/D48 (78)	EEA/D60 (79)	EMH24 (59)	EMH30 (65)	EMH36 (72)	EMH42 (78)	EMH48 (79)	FCP24 (59)	FCP30 (65)	FCP36 (72)	FCP42 (78)	FCP48 (79)	FCP60 (90)
NHP018(48)		48									48					48				48					48					
NHP024(58)			58								58						58				58				59					
NHP030 (63)				63								63						63				63				63	63			
NHP036(67)				67	67							67						67				67	67				67	67		
NHP042(73)						73							73						73					73				73	73	
NHP048(78)							78						78																79	78
NHP060(87)							87							87																87

(1) - The number in parentheses with the coil model number is the size of the piston installed in the coil. The installer must change the pin to the size indicated in the chart if it is different from the factory installed pin.

(2) - The number in parentheses following the outdoor unit model number is the size of the piston shipped with the outdoor unit.

Note: If the required orifice is not shipped with the outdoor unit or coil it must be field supplied.

428 03 3001 05

NHP036, 48 & 60

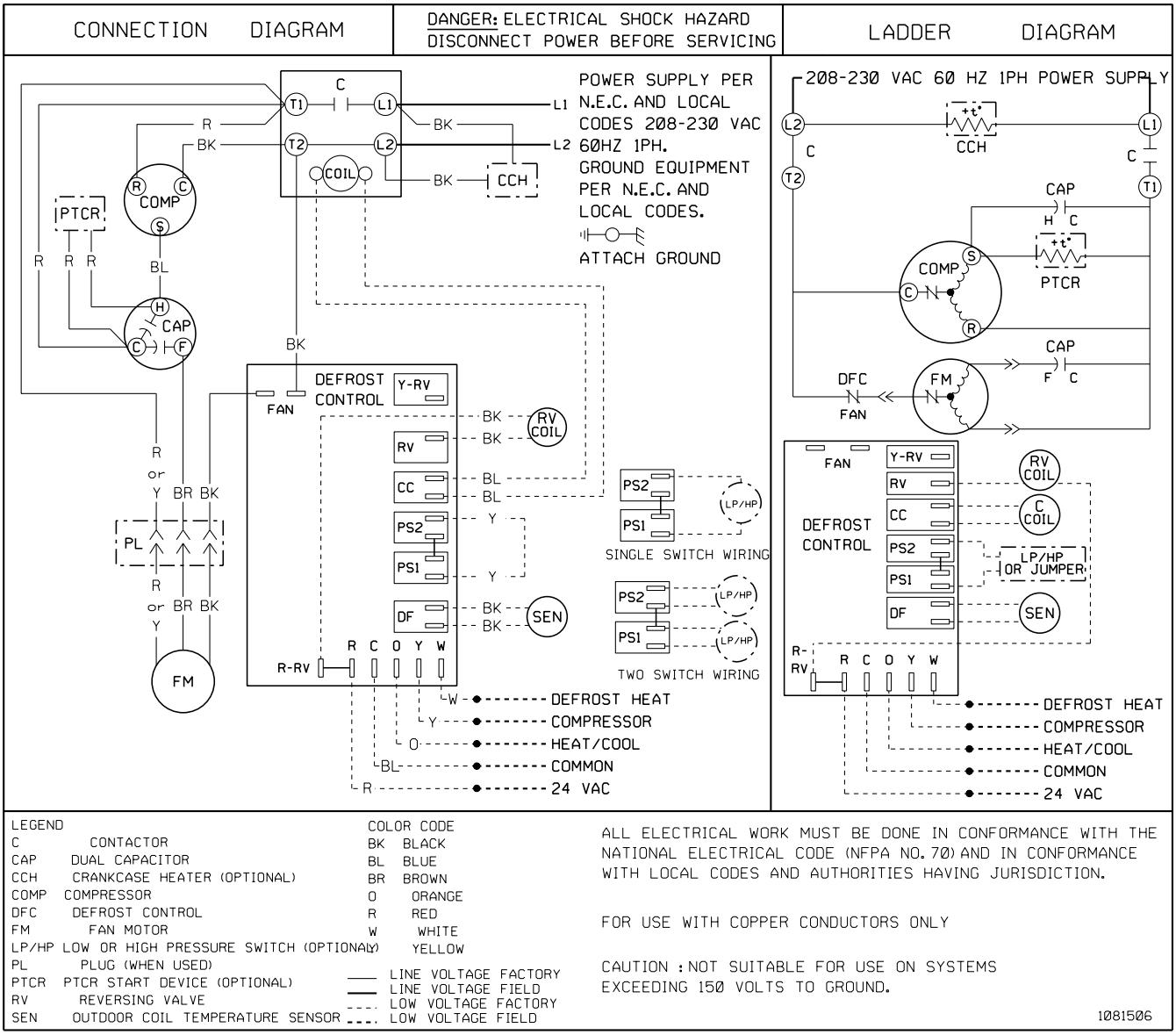

Outdoor Units (2)	COIL MODELS (1)																													
	EPA/D/M18 (51)	EPA/D/M24 (59)	EPA/D/M30 (65)	EPA/D/M36 (72)	EPA/D/M42 (78)	EPA/D/M48 (79)	EPA/D/M60 (90)	EPP024 (59)	EPP030 (65)	EPP036 (72)	EAH5524SA (56)	EAH5536SA (71)	EAH5548SA (84)	EAH5560SA (89)	EEA/D24 (51)	EEA/D30 (59)	EEA/D36 (65)	EEA/D48 (78)	EEA/D60 (79)	EMH24 (59)	EMH30 (65)	EMH36 (72)	EMH42 (78)	EMH48 (79)	FCP24 (59)	FCP30 (65)	FCP36 (72)	FCP42 (78)	FCP48 (79)	FCP60 (90)
NHP018(48)		48									48					48				48					48					
NHP024(58)			58								58						58				58				59					
NHP030 (63)				63								63						63				63				63	63			
NHP036(67)				67	67							67						67				67	67				67	67		
NHP042(73)						73							73						73					73				73	73	
NHP048(78)							78						78																79	78
NHP060(87)							87							87																87

(1) - The number in parentheses with the coil model number is the size of the piston installed in the coil. The installer must change the pin to the size indicated in the chart if it is different from the factory installed pin.

(2) - The number in parentheses following the outdoor unit model number is the size of the piston shipped with the outdoor unit.

Note: If the required orifice is not shipped with the outdoor unit or coil it must be field supplied.

428 03 3001 05

Style No:	NHP018
Voltage	208/230
Phase	1
Ampacity	11.7
Wire Ga	14
Wire Ft	40
Delay Fuse	15
Max. Fuse	20
Compressor	COPELAND
RLA	8.6
LRA	49
Cap MFD/V	25 / 370
CC Heater	NONE
Start Kit	NONE
Fan Motor-HP	1/8
Type	PSC
FLA	0.93
LRA	2.2
RPM	1075
Cap MFD/V	3 / 370
PTCR	NONE
Hi Press	NONE
Low Press	NONE
Low Amb	NONE
Defrost	ElecTime-Temp
Sensor	31-71
Operating Chg	(R-22Oz)
(25 Ft Line)*	76
Service Driers	
Liquid/Chg	5Culn/5oz
Suction	17Sqln

		Outdoor Ambient Temperature - Degrees F. Dry Bulb																			
		75				85				95				105				115			
		Entering Indoor Temperature - Degrees F. Wet Bulb																			
IDB		59	63	67	71	59	63	67	71	59	63	67	71	59	63	67	71	59	63	67	71
75	MBh	16.5	17.0	18.4	19.8	16.1	16.6	18.0	19.3	15.8	16.2	17.6	18.8	15.0	15.4	16.7	17.9	13.9	14.3	15.4	16.6
	S/T	.81	.73	.55	.35	.83	.75	.56	.36	.86	.77	.58	.37	.89	.80	.60	.39	.90	.81	.61	.39
	AMPS	6.1	6.2	6.4	6.6	6.6	6.7	7.0	7.2	7.0	7.2	7.4	7.7	7.5	7.7	7.9	8.2	7.9	8.1	8.4	8.7
	HI PR	175	188	199	207	199	214	226	236	227	244	257	268	255	274	290	302	282	303	320	334
	LO PR	61	65	71	75	63	67	74	78	66	71	77	82	70	74	81	86	72	77	84	89
80	MBh	16.8	17.2	18.4	19.6	16.4	16.8	17.9	19.2	16.0	16.4	17.5	18.7	15.2	15.6	16.6	17.8	14.1	14.4	15.4	16.5
	S/T	.89	.84	.68	.51	.91	.86	.70	.52	.94	.88	.72	.54	.98	.92	.75	.56	.99	.93	.75	.56
	AMPS	6.1	6.3	6.5	6.7	6.6	6.8	7.0	7.3	7.1	7.3	7.5	7.8	7.5	7.7	8.0	8.3	8.0	8.2	8.4	8.8
	HI PR	177	190	201	209	201	216	228	238	229	246	260	271	257	277	293	305	284	306	323	337
	LO PR	62	65	71	76	64	68	74	79	67	71	78	83	70	75	82	87	73	77	85	90
85	MBh	17.1	17.5	18.3	19.5	16.7	17.0	17.8	19.0	16.3	16.6	17.4	18.6	15.5	15.8	16.5	17.6	14.4	14.6	15.3	16.3
	S/T	.93	.90	.81	.66	.96	.92	.83	.68	.99	.95	.86	.70	1.00	.99	.89	.73	1.00	1.00	.90	.73
	AMPS	6.2	6.3	6.5	6.8	6.7	6.9	7.1	7.3	7.2	7.3	7.6	7.8	7.6	7.8	8.0	8.4	8.1	8.2	8.5	8.8
	HI PR	178	192	203	211	203	218	231	240	231	249	263	274	260	280	295	308	287	309	326	340
	LO PR	62	66	72	77	65	69	75	80	68	72	79	84	71	76	83	88	74	78	85	91

Heating		Outdoor Ambient Temperature - Degrees F. Dry Bulb																	
IDB		65	60	55	50	47	45	40	35	30	25	20	17	15	10	5	0	-5	-10
70	MBh	22.0	20.8	19.6	18.3	17.5	17.0	15.8	14.5	14.0	12.9	11.9	11.2	10.8	9.7	8.6	7.5	6.4	5.2
	T/R	34	32	30	28	27	26	24	22	22	20	18	17	17	15	13	12	10	8
	KW	1.5	1.5	1.5	1.4	1.4	1.4	1.4	1.3	1.2	1.2	1.2	1.2	1.1	1.1	1.1	1.1	1.0	1.0
	AMPS	8.2	7.6	7.2	6.7	6.5	6.4	6.0	5.7	5.5	5.2	5.0	4.9	4.8	4.6	4.3	4.0	3.8	3.4
	COP	4.2	4.0	3.9	3.7	3.6	3.5	3.4	3.2	3.3	3.1	2.9	2.8	2.8	2.5	2.3	2.1	1.8	1.5
	EER	14.3	13.8	13.3	12.7	12.3	12.1	11.5	10.8	11.2	10.7	10.1	9.7	9.4	8.7	7.9	7.1	6.2	5.3
	HI PR	250	240	230	220	215	211	203	195	186	178	171	167	164	158	152	145	140	135
	LO PR	76	70	66	60	57	55	50	45	41	36	32	30	29	24	21	18	15	12

Calculated averaged performance data, for service applications for all matches.

Part No: **1086767**

*Add or Substract (Oz per Ft) for Lines: .25oz -1/4 Liq, .45oz- 5/16 Liq, .60oz - 3/8 Liq, 1.2 oz - 1/2 Liq

Style No:	NHP024
Voltage	208/230
Phase	1
Ampacity	13.2
Wire Ga	14
Wire Ft	35
Delay Fuse	20
Max. Fuse	20
Compressor	COPELAND
RLA	9.8
LRA	56
Cap MFD/V	30 / 370
CC Heater	NONE
Start Kit	NONE
Fan Motor-HP	1/8
Type	PSC
FLA	0.93
LRA	2.2
RPM	1075
Cap MFD/V	3 / 370
PTCR	NONE
Hi Press	NONE
Low Press	NONE
Low Amb	NONE
Defrost	ElecTime-Temp
Sensor	31-71
Operating Chg	(R-22Oz)
(25 Ft Line)*	100
Service Driers	
Liquid/Chg	8Culn/7oz
Suction	30Sqln

		Outdoor Ambient Temperature - Degrees F. Dry Bulb																			
		75				85				95				105				115			
		Entering Indoor Temperature - Degrees F. Wet Bulb																			
IDB		59	63	67	71	59	63	67	71	59	63	67	71	59	63	67	71	59	63	67	71
75	MBh	21.7	22.4	24.2	26.0	21.2	21.8	23.6	25.4	20.7	21.3	23.1	24.8	19.7	20.2	21.9	23.5	18.2	18.8	20.3	21.8
	S/T	.84	.75	.57	.36	.86	.77	.58	.37	.88	.79	.60	.38	.92	.82	.62	.40	.93	.83	.63	.40
	AMPS	7.8	8.0	8.3	8.6	8.5	8.7	9.0	9.3	9.1	9.3	9.6	10.0	9.7	9.9	10.2	10.6	10.2	10.5	10.8	11.2
	HI PR	175	188	199	207	199	214	226	236	227	244	257	268	255	274	290	302	282	303	320	334
	LO PR	62	66	72	76	64	68	74	79	67	72	78	83	71	75	82	87	73	78	85	90
80	MBh	22.1	22.6	24.2	25.8	21.6	22.1	23.6	25.2	21.1	21.5	23.0	24.6	20.0	20.5	21.9	23.4	18.5	18.9	20.2	21.6
	S/T	.92	.86	.70	.52	.94	.88	.72	.54	.97	.91	.74	.55	1.00	.94	.77	.57	1.00	.95	.77	.58
	AMPS	7.9	8.1	8.4	8.7	8.6	8.8	9.1	9.4	9.2	9.4	9.7	10.1	9.8	10.0	10.3	10.7	10.3	10.6	10.9	11.4
	HI PR	177	190	201	209	201	216	228	238	229	246	260	271	257	277	293	305	284	306	323	337
	LO PR	62	66	72	77	65	69	75	80	68	72	79	84	71	76	83	88	74	78	86	91
85	MBh	22.5	22.9	24.0	25.6	22.0	22.4	23.5	25.0	21.4	21.9	22.9	24.4	20.4	20.8	21.7	23.2	18.9	19.2	20.1	21.5
	S/T	.96	.93	.84	.68	.98	.95	.86	.70	1.00	.98	.89	.72	1.00	1.00	.92	.75	1.00	1.00	.93	.75
	AMPS	8.0	8.2	8.4	8.7	8.7	8.9	9.2	9.5	9.2	9.5	9.8	10.2	9.8	10.1	10.4	10.8	10.4	10.7	11.0	11.5
	HI PR	178	192	203	211	203	218	231	240	231	249	263	274	260	280	295	308	287	309	326	340
	LO PR	63	67	73	78	65	70	76	81	69	73	80	85	72	77	84	89	74	79	86	92

Heating		Outdoor Ambient Temperature - Degrees F. Dry Bulb																	
IDB		65	60	55	50	47	45	40	35	30	25	20	17	15	10	5	0	-5	-10
70	MBh	28.9	27.4	25.8	24.1	23.0	22.3	20.7	19.1	15.8	14.6	13.4	12.7	12.2	11.0	9.7	8.5	7.2	5.9
	T/R	33	32	30	28	27	26	24	22	18	17	16	15	14	13	11	10	8	7
	KW	2.1	2.1	2.0	2.0	1.9	1.9	1.9	1.8	1.7	1.7	1.6	1.6	1.6	1.6	1.5	1.5	1.4	1.4
	AMPS	11.2	10.4	9.7	9.1	8.8	8.6	8.1	7.7	7.4	7.1	6.7	6.6	6.5	6.2	5.8	5.4	5.0	4.5
	COP	4.0	3.9	3.7	3.6	3.5	3.4	3.2	3.1	2.7	2.5	2.4	2.3	2.2	2.1	1.9	1.7	1.5	1.3
	EER	13.7	13.3	12.8	12.2	11.9	11.6	11.0	10.4	9.1	8.6	8.2	7.8	7.6	7.0	6.4	5.8	5.1	4.3
	HI PR	285	273	262	251	245	240	231	222	212	203	195	190	187	180	173	166	160	154
	LO PR	77	71	67	61	58	56	51	46	41	37	32	30	29	25	21	18	16	12

Calculated averaged performance data, for service applications for all matches.

Part No: **1086768**

*Add or Substract (Oz per Ft) for Lines: .25oz -1/4 Liq, .45oz- 5/16 Liq, .60oz - 3/8 Liq, 1.2 oz - 1/2 Liq

Style No:	NHP030
Voltage	208/230
Phase	1
Ampacity	18.2
Wire Ga	14
Wire Ft	25
Delay Fuse	25
Max. Fuse	30
Compressor	COPELAND
RLA	13.7
LRA	75
Cap MFD/V	35 / 370
CC Heater	NONE
Start Kit	NONE
Fan Motor-HP	1/5
Type	PSC
FLA	1.1
LRA	2.4
RPM	1075
Cap MFD/V	3 / 370
PTCR	NONE
Hi Press	NONE
Low Press	NONE
Low Amb	NONE
Defrost	ElecTime-Temp
Sensor	31-71
Operating Chg	(R-22Oz)
(25 Ft Line)*	104
Service Driers	
Liquid/Chg	8Culn/7oz
Suction	30Sqln

		Outdoor Ambient Temperature - Degrees F. Dry Bulb																			
		75				85				95				105				115			
		Entering Indoor Temperature - Degrees F. Wet Bulb																			
IDE		59	63	67	71	59	63	67	71	59	63	67	71	59	63	67	71	59	63	67	71
75	MBh	27.4	28.2	30.5	32.8	26.8	27.5	29.8	32.0	26.1	26.9	29.1	31.2	24.8	25.5	27.6	29.7	23.0	23.6	25.6	27.5
	S/T	.89	.80	.60	.39	.91	.82	.62	.40	.94	.84	.64	.41	.98	.88	.66	.43	.99	.88	.67	.43
	AMPS	10.2	10.4	10.8	11.2	11.1	11.4	11.7	12.2	11.9	12.2	12.6	13.1	12.6	13.0	13.4	13.9	13.4	13.8	14.2	14.8
	HI PR	182	195	206	215	207	222	235	245	235	253	267	279	265	285	301	314	292	315	332	347
	LO PR	62	66	72	76	64	68	74	79	67	72	78	83	71	75	82	87	73	78	85	90
80	MBh	27.9	28.5	30.5	32.6	27.2	27.8	29.7	31.8	26.6	27.1	29.0	31.0	25.2	25.8	27.6	29.5	23.4	23.9	25.5	27.3
	S/T	.98	.92	.75	.56	1.00	.94	.77	.57	1.00	.97	.79	.59	1.00	1.00	.82	.61	1.00	1.00	.83	.62
	AMPS	10.3	10.5	10.9	11.3	11.2	11.5	11.9	12.3	12.0	12.3	12.7	13.2	12.8	13.1	13.5	14.1	13.5	13.9	14.4	14.9
	HI PR	183	197	208	217	209	224	237	247	238	256	270	282	267	288	304	317	295	318	336	350
	LO PR	62	66	72	77	65	69	75	80	68	72	79	84	71	76	83	88	74	78	86	91
85	MBh	28.4	28.9	30.3	32.3	27.7	28.2	29.6	31.6	27.0	27.6	28.9	30.8	25.7	26.2	27.4	29.2	23.8	24.2	25.4	27.1
	S/T	1.00	.99	.89	.72	1.00	1.00	.92	.74	1.00	1.00	.94	.77	1.00	1.00	.98	.80	1.00	1.00	.99	.80
	AMPS	10.4	10.6	11.0	11.4	11.3	11.6	12.0	12.4	12.1	12.4	12.8	13.3	12.9	13.2	13.7	14.2	13.7	14.0	14.5	15.1
	HI PR	185	199	211	220	211	227	239	250	240	258	273	284	270	291	307	320	298	321	339	354
	LO PR	63	67	73	78	65	70	76	81	69	73	80	85	72	77	84	89	74	79	86	92

Heating		Outdoor Ambient Temperature - Degrees F. Dry Bulb																	
IDB		65	60	55	50	47	45	40	35	30	25	20	17	15	10	5	0	-5	-10
70	MBh	36.5	34.5	32.5	30.4	29.0	28.1	26.1	24.1	20.6	19.0	17.5	16.5	15.9	14.3	12.6	11.0	9.4	7.7
	T/R	34	32	30	28	27	26	24	22	19	18	16	15	15	13	12	10	9	7
	KW	2.5	2.5	2.4	2.3	2.3	2.3	2.2	2.2	2.0	2.0	1.9	1.9	1.8	1.8	1.7	1.7	1.6	1.6
	AMPS	14.2	13.1	12.3	11.5	11.1	10.9	10.2	9.7	9.3	8.9	8.4	8.2	8.1	7.7	7.1	6.7	6.2	5.5
	COP	4.3	4.1	4.0	3.8	3.7	3.6	3.4	3.2	3.0	2.8	2.7	2.6	2.5	2.3	2.1	1.9	1.7	1.4
	EER	14.5	14.1	13.6	13.0	12.6	12.3	11.7	11.1	10.3	9.7	9.2	8.8	8.6	7.9	7.2	6.5	5.7	4.8
	HI PR	275	264	254	243	237	232	223	214	205	196	188	184	181	174	167	160	155	149
	LO PR	72	66	62	57	54	52	48	43	38	34	30	28	27	23	20	17	15	11

Calculated averaged performance data, for service applications for all matches.

*Add or Subtract (Oz per Ft) for Lines: .25oz -1/4 Liq, .45oz- 5/16 Liq, .60oz - 3/8 Liq, 1.2 oz - 1/2 Liq

Part No: **1086769**

428 03 3001 05

Style No:	NHP036
Voltage	208/230
Phase	1
Ampacity	27.2
Wire Ga	10
Wire Ft	50
Delay Fuse	35
Max. Fuse	45
Compressor	COPELAND
RLA	20.2
LRA	100
Cap MFD/V	40 / 440
CC Heater	NONE
Start Kit	NONE
Fan Motor-HP	1/3
Type	PSC
FLA	1.9
LRA	3.7
RPM	1075
Cap MFD/V	5 / 370
PTCR	NONE
Hi Press	NONE
Low Press	NONE
Low Amb	NONE
Defrost	ElecTime-Temp
Sensor	31-71
Operating Chg	(R-22Oz)
(25 Ft Line)*	120
Service Driers	
Liquid/Chg	16Culn/11oz
Suction	30Sqln

		Outdoor Ambient Temperature - Degrees F. Dry Bulb																			
		75				85				95				105				115			
		Entering Indoor Temperature - Degrees F. Wet Bulb																			
IDB		59	63	67	71	59	63	67	71	59	63	67	71	59	63	67	71	59	63	67	71
75	MBh	31.8	32.7	35.4	38.0	31.0	31.9	34.5	37.1	30.2	31.1	33.7	36.2	28.7	29.6	32.0	34.4	26.6	27.4	29.7	31.8
	S/T	.89	.80	.60	.39	.91	.82	.62	.40	.94	.84	.64	.41	.98	.88	.66	.43	.99	.88	.67	.43
	AMPS	13.0	13.3	13.7	14.2	14.1	14.4	14.9	15.5	15.1	15.4	16.0	16.6	16.0	16.4	17.0	17.6	17.0	17.4	18.0	18.7
	HI PR	183	197	208	217	208	224	236	247	237	255	269	281	267	287	303	316	295	317	335	349
	LO PR	59	62	68	72	61	65	71	75	64	68	74	79	67	71	78	83	69	74	80	86
80	MBh	32.3	33.0	35.3	37.7	31.5	32.2	34.4	36.8	30.8	31.4	33.6	35.9	29.2	29.9	31.9	34.1	27.1	27.7	29.6	31.6
	S/T	.98	.92	.75	.56	1.00	.94	.77	.57	1.00	.97	.79	.59	1.00	1.00	.82	.61	1.00	1.00	.83	.62
	AMPS	13.1	13.4	13.9	14.4	14.2	14.6	15.1	15.6	15.2	15.6	16.1	16.7	16.2	16.6	17.1	17.8	17.1	17.6	18.2	18.8
	HI PR	185	199	210	219	210	226	239	249	239	258	272	284	269	290	306	319	298	320	338	353
	LO PR	59	63	69	73	61	65	71	76	65	69	75	80	68	72	79	84	70	74	81	87
85	MBh	32.9	33.5	35.1	37.5	32.1	32.7	34.3	36.6	31.3	31.9	33.4	35.7	29.7	30.3	31.8	33.9	27.6	28.1	29.4	31.4
	S/T	1.00	.99	.89	.72	1.00	1.00	.92	.74	1.00	1.00	.94	.77	1.00	1.00	.98	.80	1.00	1.00	.99	.80
	AMPS	13.2	13.5	14.0	14.5	14.4	14.7	15.2	15.8	15.4	15.7	16.2	16.9	16.3	16.7	17.3	18.0	17.3	17.7	18.3	19.0
	HI PR	187	201	212	221	212	228	241	252	242	260	275	287	272	293	309	322	300	323	341	356
	LO PR	60	64	69	74	62	66	72	77	65	69	76	81	68	73	79	85	71	75	82	87

Heating		Outdoor Ambient Temperature - Degrees F. Dry Bulb																	
IDB		65	60	55	50	47	45	40	35	30	25	20	17	15	10	5	0	-5	-10
70	MBh	42.2	40.0	37.7	35.2	33.6	32.6	30.2	27.9	24.2	22.3	20.5	19.4	18.7	16.8	14.9	13.0	11.1	9.1
	T/R	33	31	29	27	26	25	23	22	19	17	16	15	14	13	11	10	9	7
	KW	3.3	3.2	3.2	3.1	3.1	3.0	2.9	2.9	2.8	2.7	2.7	2.6	2.6	2.5	2.4	2.4	2.3	2.2
	AMPS	19.0	17.6	16.4	15.5	14.9	14.6	13.8	13.1	12.5	12.0	11.4	11.1	11.0	10.4	9.7	9.1	8.5	7.6
	COP	3.7	3.6	3.5	3.3	3.2	3.2	3.0	2.8	2.5	2.4	2.3	2.2	2.1	1.9	1.8	1.6	1.4	1.2
	EER	12.8	12.3	11.9	11.4	11.0	10.8	10.3	9.7	8.6	8.2	7.7	7.4	7.2	6.7	6.1	5.5	4.8	4.1
	HI PR	273	262	252	241	235	231	222	213	204	195	187	182	179	172	166	159	153	148
	LO PR	66	62	58	53	50	48	44	39	36	32	28	26	25	21	18	15	13	11

Calculated averaged performance data, for service applications for all matches.

Part No: **1086770**

*Add or Subtract (Oz per Ft) for Lines: .25oz -1/4 Liq, .45oz- 5/16 Liq, .60oz - 3/8 Liq, 1.2 oz - 1/2 Liq

Style No:	H036*KB/NHP036*KB
Voltage	208/230
Phase	1
Ampacity	21.5
Wire Ga	12
Wire Ft	35
Delay Fuse	15
Max. Fuse	35
Compressor	COPELAND
RLA	15.6
LRA	96
Cap MFD/V	50 / 370
CC Heater	NONE
Start Kit	NONE
Fan Motor-HP	1/3
Type	PSC
FLA	1.9
LRA	3.7
RPM	1075
Cap MFD/V	5 / 370
PTCR	NONE
Hi Press	NONE
Low Press	NONE
Low Amb	NONE
Defrost	ElecTime-Temp
Sensor	31-71
Operating Chg	(R-22Oz)
(25 Ft Line)*	135
Service Driers	
Liquid/Chg	16Culn/11oz
Suction	30Sqln

		Outdoor Ambient Temperature - Degrees F. Dry Bulb																			
		75				85				95				105				115			
		Entering Indoor Temperature - Degrees F. Wet Bulb																			
IDB		59	63	67	71	59	63	67	71	59	63	67	71	59	63	67	71	59	63	67	71
75	MBh	31.8	32.7	35.4	38.0	31.0	31.9	34.5	37.1	30.2	31.1	33.7	36.2	28.7	29.6	32.0	34.4	26.6	27.4	29.7	31.8
	S/T	.86	.77	.58	.37	.88	.79	.60	.38	.91	.81	.61	.40	.94	.84	.64	.41	.95	.85	.64	.41
	AMPS	12.6	12.9	13.3	13.8	13.7	14.0	14.5	15.0	14.6	15.0	15.5	16.0	15.5	15.9	16.4	17.1	16.5	16.9	17.4	18.1
	HI PR	176	189	199	208	200	215	227	237	227	245	258	270	256	275	291	303	283	304	321	335
	LO PR	61	65	71	75	63	67	74	78	66	71	77	82	70	74	81	86	72	77	84	89
80	MBh	32.3	33.0	35.3	37.7	31.5	32.2	34.4	36.8	30.8	31.4	33.6	35.9	29.2	29.9	31.9	34.1	27.1	27.7	29.6	31.6
	S/T	.94	.88	.72	.54	.96	.90	.74	.55	1.00	.93	.76	.57	1.00	.97	.79	.59	1.00	.98	.80	.59
	AMPS	12.7	13.0	13.4	13.9	13.8	14.1	14.6	15.1	14.7	15.1	15.6	16.2	15.7	16.1	16.6	17.2	16.6	17.0	17.6	18.3
	HI PR	177	191	201	210	202	217	229	239	230	247	261	272	258	278	294	306	285	307	324	338
	LO PR	62	65	71	76	64	68	74	79	67	71	78	83	70	75	82	87	73	77	85	90
85	MBh	32.9	33.5	35.1	37.5	32.1	32.7	34.3	36.6	31.3	31.9	33.4	35.7	29.7	30.3	31.8	33.9	27.6	28.1	29.4	31.4
	S/T	.99	.95	.86	.70	1.00	.98	.88	.71	1.00	1.00	.91	.74	1.00	1.00	.94	.77	1.00	1.00	.95	.77
	AMPS	12.8	13.1	13.6	14.1	13.9	14.3	14.7	15.3	14.9	15.2	15.7	16.3	15.8	16.2	16.8	17.4	16.8	17.2	17.8	18.4
	HI PR	179	193	204	212	204	219	231	241	232	250	264	275	261	281	297	309	288	310	328	342
	LO PR	62	66	72	77	65	69	75	80	68	72	79	84	71	76	83	88	74	78	85	91

Heating		Outdoor Ambient Temperature - Degrees F. Dry Bulb																	
IDB		65	60	55	50	47	45	40	35	30	25	20	17	15	10	5	0	-5	-10
70	MBh	42.2	40.0	37.7	35.2	33.6	32.6	30.2	27.9	24.4	22.5	20.8	19.6	18.9	16.9	15.0	13.1	11.2	9.2
	T/R	33	31	29	27	26	25	23	22	19	17	16	15	15	13	12	10	9	7
	KW	2.9	2.9	2.8	2.7	2.7	2.7	2.6	2.6	2.4	2.3	2.3	2.2	2.2	2.1	2.1	2.0	2.0	1.9
	AMPS	16.2	15.1	14.1	13.3	12.8	12.6	11.9	11.3	10.8	10.3	9.8	9.6	9.5	9.0	8.4	7.9	7.3	6.6
	COP	4.2	4.1	3.9	3.7	3.6	3.6	3.4	3.2	3.0	2.8	2.7	2.6	2.5	2.3	2.1	1.9	1.7	1.4
	EER	14.4	13.9	13.4	12.8	12.4	12.1	11.5	10.9	10.3	9.7	9.2	8.8	8.6	7.9	7.2	6.5	5.7	4.8
	HI PR	250	240	230	220	215	211	203	195	186	178	171	167	164	158	152	145	140	135
	LO PR	65	60	57	52	49	47	43	39	35	31	27	25	25	21	18	15	13	10

Calculated averaged performance data, for service applications for all matches.

Part No: **1087257**

*Add or Subtract (Oz per Ft) for Lines: .25oz -1/4 Liq, .45oz- 5/16 Liq, .60oz - 3/8 Liq, 1.2 oz - 1/2 Liq

Style No:	NHP042
Voltage	208/230
Phase	1
Ampacity	24.4
Wire Ga	12
Wire Ft	30
Delay Fuse	30
Max. Fuse	40
Compressor	COPELAND
RLA	17.1
LRA	105
Cap MFD/V	40 / 440
CC Heater	NONE
Start Kit	NONE
Fan Motor-HP	1/3
Type	PSC
FLA	1.9
LRA	3.7
RPM	1075
Cap MFD/V	5 / 370
PTCR	NONE
Hi Press	NONE
Low Press	NONE
Low Amb	NONE
Defrost	ElecTime-Temp
Sensor	31-71
Operating Chg	(R-22Oz)
(25 Ft Line)*	138
Service Driers	
Liquid/Chg	16Culn/11oz
Suction	30Sqln

		Outdoor Ambient Temperature - Degrees F. Dry Bulb																			
		75				85				95				105				115			
		Entering Indoor Temperature - Degrees F. Wet Bulb																			
IDE		59	63	67	71	59	63	67	71	59	63	67	71	59	63	67	71	59	63	67	71
75	MBh	37.8	38.9	42.1	45.2	36.9	38.0	41.1	44.1	36.0	37.1	40.1	43.1	34.2	35.2	38.1	40.9	31.7	32.6	35.3	37.9
	S/T	.88	.79	.60	.38	.90	.81	.61	.39	.93	.83	.63	.41	.97	.86	.65	.42	.98	.87	.66	.42
	AMPS	14.6	15.0	15.5	16.1	15.9	16.3	16.9	17.5	17.0	17.4	18.0	18.7	18.1	18.6	19.2	19.9	19.2	19.7	20.4	21.2
	HI PR	184	198	209	218	209	225	237	248	238	256	270	282	268	288	304	317	296	318	336	350
	LO PR	62	66	73	77	65	69	75	80	68	73	79	84	71	76	83	88	74	79	86	91
80	MBh	38.5	39.3	42.0	44.9	37.6	38.4	41.0	43.8	36.6	37.4	40.0	42.8	34.8	35.6	38.0	40.6	32.2	32.9	35.2	37.6
	S/T	.97	.91	.74	.55	.99	.93	.76	.56	1.00	.96	.78	.58	1.00	.99	.81	.61	1.00	1.00	.82	.61
	AMPS	14.8	15.1	15.6	16.2	16.1	16.5	17.0	17.7	17.2	17.6	18.2	18.9	18.3	18.8	19.4	20.1	19.4	19.9	20.6	21.4
	HI PR	185	200	211	220	211	227	240	250	240	259	273	285	270	291	307	320	299	321	339	354
	LO PR	63	67	73	78	66	70	76	81	69	73	80	85	72	77	84	89	75	79	87	92
85	MBh	39.1	39.9	41.8	44.6	38.2	39.0	40.8	43.5	37.3	38.0	39.8	42.5	35.4	36.1	37.8	40.3	32.8	33.4	35.0	37.4
	S/T	1.00	.98	.88	.72	1.00	1.00	.90	.73	1.00	1.00	.93	.76	1.00	1.00	.97	.79	1.00	1.00	.98	.79
	AMPS	14.9	15.3	15.8	16.4	16.2	16.6	17.2	17.8	17.3	17.8	18.4	19.1	18.5	18.9	19.6	20.3	19.6	20.1	20.8	21.6
	HI PR	187	202	213	222	213	229	242	253	243	261	276	288	273	294	310	324	302	325	343	357
	LO PR	64	68	74	79	66	70	77	82	70	74	81	86	73	78	85	90	75	80	88	93

Heating		Outdoor Ambient Temperature - Degrees F. Dry Bulb																	
IDB		65	60	55	50	47	45	40	35	30	25	20	17	15	10	5	0	-5	-10
70	MBh	49.7	47.0	44.3	41.4	39.5	38.3	35.6	32.8	31.2	28.8	26.5	25.0	24.1	21.6	19.2	16.7	14.3	11.7
	T/R	33	31	29	27	26	25	24	22	21	19	18	17	16	14	13	11	9	8
	KW	3.4	3.3	3.3	3.2	3.1	3.1	3.0	3.0	2.9	2.8	2.7	2.7	2.6	2.6	2.5	2.4	2.3	2.3
	AMPS	20.4	18.9	17.7	16.6	16.0	15.7	14.8	14.0	13.4	12.8	12.2	11.9	11.7	11.1	10.4	9.7	9.0	8.1
	COP	4.3	4.1	4.0	3.8	3.7	3.6	3.4	3.2	3.2	3.0	2.9	2.7	2.7	2.5	2.2	2.0	1.8	1.5
	EER	14.6	14.1	13.6	13.0	12.6	12.3	11.7	11.1	10.9	10.3	9.8	9.4	9.1	8.4	7.7	6.9	6.1	5.1
	HI PR	257	246	237	226	221	217	208	200	192	183	176	171	168	162	156	149	144	139
	LO PR	65	60	57	52	49	47	43	39	35	31	27	25	25	21	18	15	13	10

Calculated averaged performance data, for service applications for all matches. Part No:

*Add or Subtract (Oz per Ft) for Lines: .25oz -1/4 Liq, .45oz- 5/16 Liq, .60oz - 3/8 Liq, 1.2 oz - 1/2 Liq **1086771**

Style No:	NHP048
Voltage	208/230
Phase	1
Ampacity	29.8
Wire Ga	10
Wire Ft	40
Delay Fuse	35
Max. Fuse	50
Compressor	COPELAND
RLA	22.3
LRA	131
Cap MFD/V	40 / 370
CC Heater	NONE
Start Kit	NONE
Fan Motor-HP	1/3
Type	PSC
FLA	1.9
LRA	3.7
RPM	1075
Cap MFD/V	5 / 370
PTCR	NONE
Hi Press	NONE
Low Press	NONE
Low Amb	NONE
Defrost	ElecTime-Temp
Sensor	31-71
Operating Chg	(R-22Oz)
(25 Ft Line)*	160
Service Driers	
Liquid/Chg	30Culn/17oz
Suction	30Sqln

		Outdoor Ambient Temperature - Degrees F. Dry Bulb																			
		75				85				95				105				115			
		Entering Indoor Temperature - Degrees F. Wet Bulb																			
IDE		59	63	67	71	59	63	67	71	59	63	67	71	59	63	67	71	59	63	67	71
75	MBh	41.6	42.8	46.3	49.7	40.6	41.8	45.2	48.5	39.6	40.8	44.1	47.4	37.6	38.7	41.9	45.0	34.8	35.9	38.8	41.7
	S/T	.89	.80	.60	.39	.91	.82	.62	.40	.94	.84	.64	.41	.98	.88	.66	.43	.99	.88	.67	.43
	AMPS	17.7	18.1	18.7	19.4	19.2	19.7	20.4	21.1	20.6	21.1	21.8	22.6	21.9	22.5	23.2	24.1	23.2	23.8	24.6	25.6
	HI PR	190	205	216	226	216	233	246	257	247	265	280	292	277	298	315	329	306	330	348	363
	LO PR	62	66	72	76	64	68	74	79	67	72	78	83	71	75	82	87	73	78	85	90
80	MBh	42.3	43.2	46.2	49.4	41.3	42.2	45.1	48.2	40.3	41.2	44.0	47.0	38.3	39.1	41.8	44.7	35.5	36.2	38.7	41.4
	S/T	.98	.92	.75	.56	1.00	.94	.77	.57	1.00	.97	.79	.59	1.00	1.00	.82	.61	1.00	1.00	.83	.62
	AMPS	17.8	18.3	18.9	19.6	19.4	19.9	20.6	21.3	20.8	21.3	22.0	22.8	22.1	22.7	23.4	24.4	23.5	24.1	24.9	25.8
	HI PR	192	207	218	228	219	235	248	259	249	268	283	295	280	302	318	332	310	333	352	367
	LO PR	62	66	72	77	65	69	75	80	68	72	79	84	71	76	83	88	74	78	86	91
85	MBh	43.1	43.9	46.0	49.0	42.0	42.8	44.9	47.9	41.0	41.8	43.8	46.7	39.0	39.7	41.6	44.4	36.1	36.8	38.5	41.1
	S/T	1.00	.99	.89	.72	1.00	1.00	.92	.74	1.00	1.00	.94	.77	1.00	1.00	.98	.80	1.00	1.00	.99	.80
	AMPS	18.0	18.4	19.1	19.8	19.6	20.1	20.7	21.5	21.0	21.5	22.2	23.1	22.3	22.9	23.7	24.6	23.7	24.3	25.1	26.1
	HI PR	194	209	221	230	221	238	251	262	252	271	286	298	283	305	322	335	313	336	355	371
	LO PR	63	67	73	78	65	70	76	81	69	73	80	85	72	77	84	89	74	79	86	92

Heating		Outdoor Ambient Temperature - Degrees F. Dry Bulb																	
IDB		65	60	55	50	47	45	40	35	30	25	20	17	15	10	5	0	-5	-10
70	MBh	55.9	53.0	49.9	46.6	44.5	43.1	40.1	36.9	35.9	33.1	30.5	28.8	27.7	24.9	22.1	19.2	16.4	13.4
	T/R	32	31	29	27	26	25	23	21	21	19	18	17	16	14	13	11	10	8
	KW	3.7	3.6	3.5	3.4	3.4	3.4	3.3	3.2	3.2	3.2	3.1	3.0	3.0	2.9	2.8	2.7	2.7	2.6
	AMPS	23.4	21.6	20.2	19.0	18.3	17.9	16.9	16.0	15.3	14.6	13.9	13.6	13.4	12.7	11.8	11.1	10.2	9.2
	COP	4.4	4.3	4.1	4.0	3.8	3.7	3.6	3.4	3.2	3.1	2.9	2.8	2.7	2.5	2.3	2.1	1.8	1.5
	EER	15.2	14.7	14.1	13.5	13.1	12.8	12.2	11.5	11.0	10.5	9.9	9.5	9.3	8.5	7.8	7.0	6.2	5.2
	HI PR	256	245	236	225	220	216	207	199	191	182	175	171	168	161	155	149	143	138
	LO PR	64	59	55	51	48	46	42	38	34	30	27	25	24	20	18	15	13	10

Calculated averaged performance data, for service applications for all matches. Part No:

*Add or Subtract (Oz per Ft) for Lines: .25oz -1/4 Liq, .45oz- 5/16 Liq, .60oz - 3/8 Liq, 1.2 oz - 1/2 Liq **1086772**

Style No:	NHP060
Voltage	208/230
Phase	1
Ampacity	36.2
Wire Ga	8
Wire Ft	45
Delay Fuse	45
Max. Fuse	60
Compressor	COPELAND
RLA	27.4
LRA	144
Cap MFD/V	** / 370
CC Heater	NONE
Start Kit	NONE
Fan Motor-HP	1/3
Type	PSC
FLA	1.9
LRA	3.7
RPM	1075
Cap MFD/V	5 / 370
PTCR	NONE
Hi Press	NONE
Low Press	NONE
Low Amb	NONE
Defrost	ElecTime-Temp
Sensor	31-71
Operating Chg	(R-22Oz)
(25 Ft Line)*	198
Service Driers	
Liquid/Chg	30CuIn/17oz
Suction	30SqIn

		Outdoor Ambient Temperature - Degrees F. Dry Bulb																			
		75				85				95				105				115			
		Entering Indoor Temperature - Degrees F. Wet Bulb																			
IDB		59	63	67	71	59	63	67	71	59	63	67	71	59	63	67	71	59	63	67	71
75	MBh	52.0	53.5	57.9	62.2	50.7	52.2	56.5	60.7	49.5	51.0	55.2	59.2	47.0	48.4	52.4	56.2	43.6	44.8	48.5	52.1
	S/T	.86	.77	.58	.37	.88	.79	.60	.38	.91	.81	.61	.40	.94	.84	.64	.41	.95	.85	.64	.41
	AMPS	22.9	23.5	24.3	25.3	25.0	25.6	26.5	27.6	26.8	27.5	28.4	29.5	28.6	29.3	30.3	31.5	30.3	31.1	32.2	33.5
	HI PR	196	211	222	232	223	240	253	264	254	273	288	300	285	307	324	338	315	339	358	373
	LO PR	55	59	64	69	58	61	67	71	61	64	70	75	63	67	74	78	66	70	76	81
80	MBh	52.9	54.1	57.8	61.7	51.6	52.8	56.4	60.3	50.4	51.5	55.0	58.8	47.9	48.9	52.3	55.9	44.3	45.3	48.4	51.7
	S/T	.94	.88	.72	.54	.96	.90	.74	.55	1.00	.93	.76	.57	1.00	.97	.79	.59	1.00	.98	.80	.59
	AMPS	23.2	23.7	24.6	25.5	25.3	25.9	26.8	27.8	27.1	27.7	28.7	29.8	28.9	29.6	30.6	31.8	30.6	31.4	32.5	33.8
	HI PR	198	213	225	234	225	242	255	266	256	276	291	304	288	310	327	341	318	343	362	377
	LO PR	56	60	65	69	58	62	68	72	61	65	71	76	64	68	74	79	66	70	77	82
85	MBh	53.8	54.9	57.5	61.3	52.5	53.6	56.1	59.8	51.3	52.3	54.7	58.4	48.7	49.6	52.0	55.5	45.1	46.0	48.2	51.4
	S/T	.99	.95	.86	.70	1.00	.98	.88	.71	1.00	1.00	.91	.74	1.00	1.00	.94	.77	1.00	1.00	.95	.77
	AMPS	23.4	24.0	24.8	25.8	25.5	26.1	27.0	28.1	27.3	28.0	29.0	30.1	29.1	29.9	30.9	32.1	30.9	31.7	32.8	34.1
	HI PR	200	215	227	237	227	244	258	269	259	278	294	307	291	313	331	345	321	346	365	381
	LO PR	57	60	66	70	59	63	68	73	62	66	72	76	65	69	75	80	67	71	78	83

Heating		Outdoor Ambient Temperature - Degrees F. Dry Bulb																	
IDB		65	60	55	50	47	45	40	35	30	25	20	17	15	10	5	0	-5	-10
70	MBh	70.4	66.6	62.8	58.6	56.0	54.3	50.4	46.5	44.1	40.7	37.5	35.4	34.1	30.6	27.1	23.6	20.2	16.5
	T/R	36	34	32	30	29	28	26	24	23	21	19	18	18	16	14	12	10	9
	KW	5.2	5.1	5.0	4.9	4.8	4.8	4.6	4.5	4.3	4.1	4.0	4.0	3.9	3.8	3.7	3.6	3.5	3.4
	AMPS	32.1	29.6	27.7	26.0	25.0	24.5	23.1	21.8	20.9	19.9	18.9	18.4	18.2	17.2	16.0	15.0	13.8	12.3
	COP	3.9	3.8	3.7	3.5	3.4	3.3	3.2	3.0	3.0	2.9	2.7	2.6	2.5	2.3	2.1	1.9	1.7	1.4
	EER	13.5	13.0	12.6	12.0	11.6	11.4	10.8	10.3	10.4	9.8	9.3	8.9	8.7	8.0	7.3	6.6	5.8	4.9
	HI PR	268	257	247	237	231	227	218	209	200	191	184	179	176	169	163	156	151	145
	LO PR	61	57	53	49	46	44	41	36	33	29	26	24	23	19	17	14	12	10

Calculated averaged performance data, for service applications for all matches.

*Add or Substract (Oz per Ft) for Lines: .25oz -1/4 Liq, .45oz- 5/16 Liq, .60oz - 3/8 Liq, 1.2 oz - 1/2 Liq

**60 for A1, 80 for A2, 70 for A3 and for A1 and A2 with compressor change

Part No: **1088000**

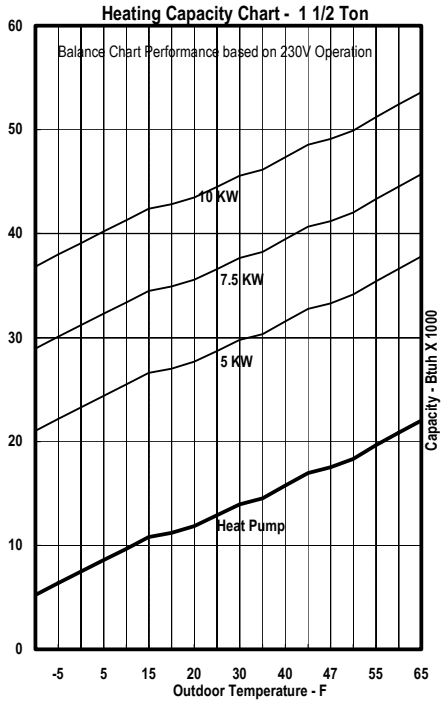

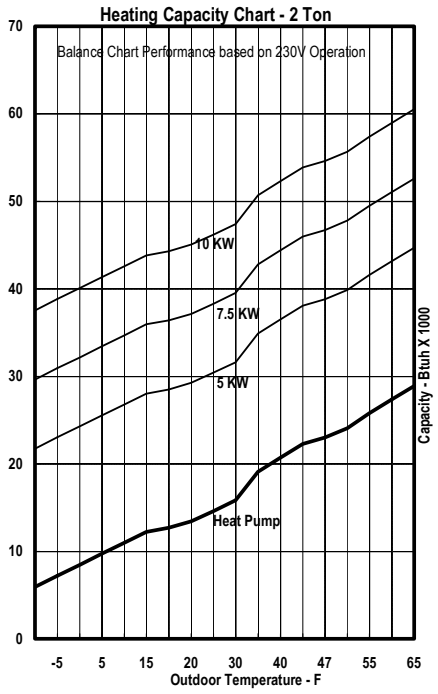

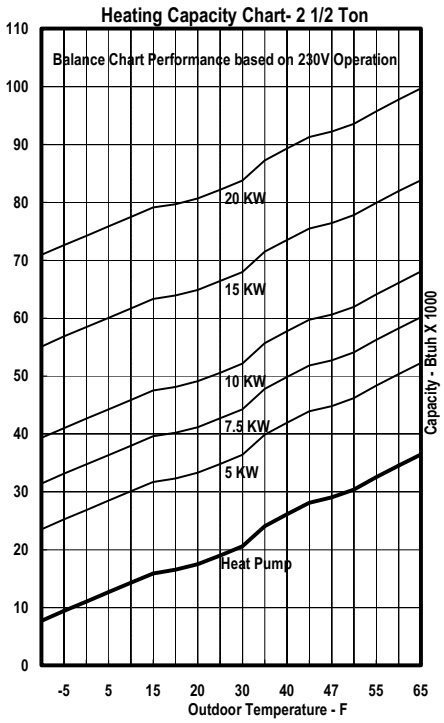

428 03 3001 05

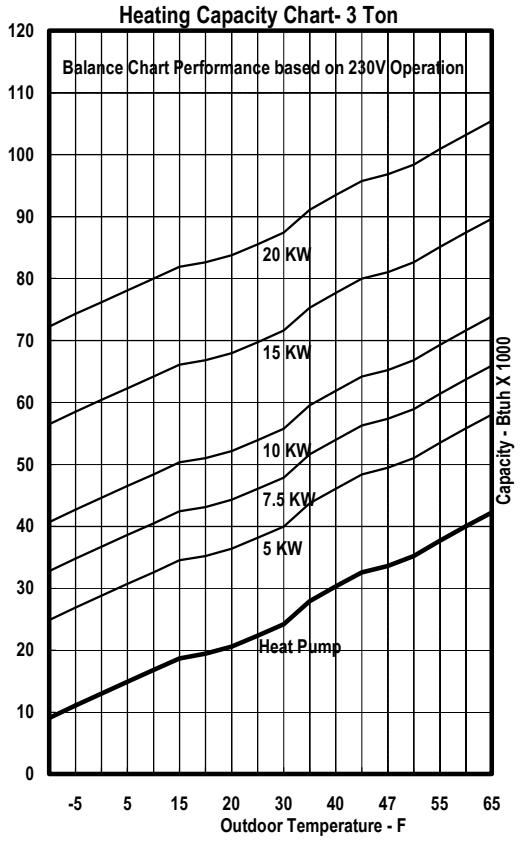

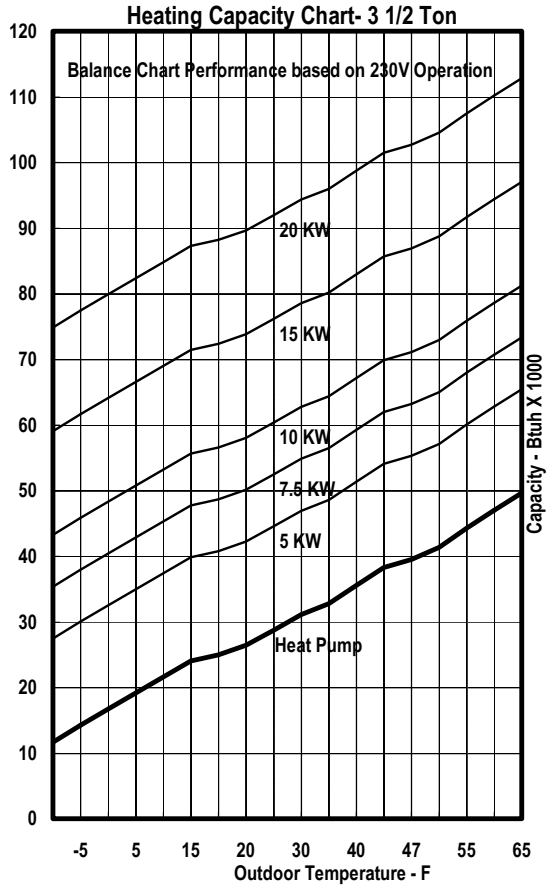

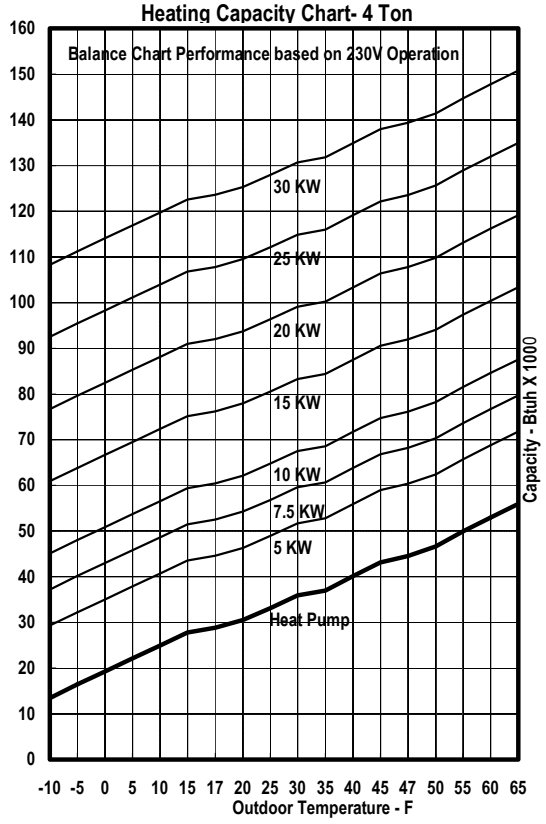

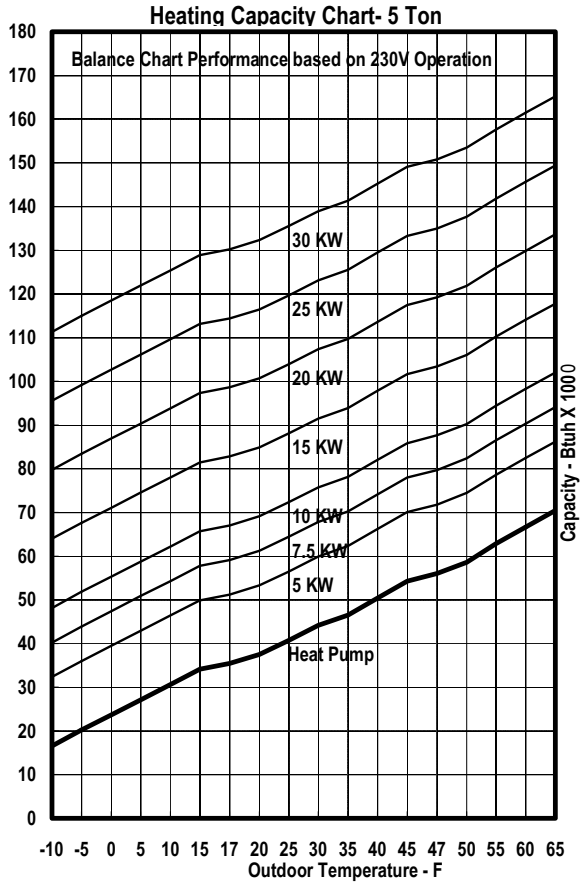

428 03 3001 05