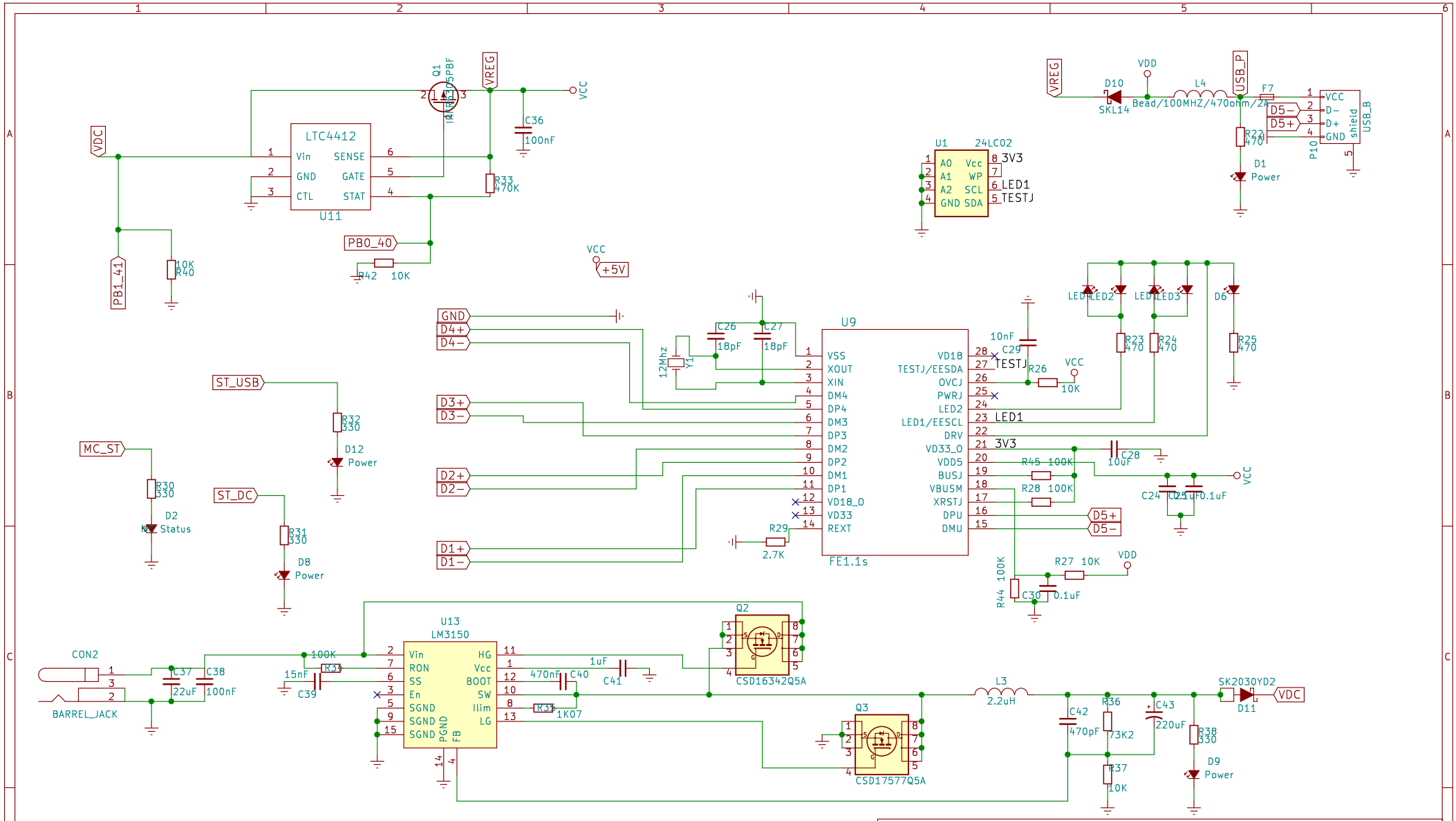

Sheet: /USB hub/
File: USB_hub.sch

Title:

Size: A4	Date:	Rev:
KiCad E.D.A. kicad 4.0.1-stable		Id: 2/3